MAX14832

One-Time Programmable Industrial Sensor Output Driver

General Description

The MAX14832 is a 24V, 100mA driver for industrial binary sensors. The device is configurable through one-time programming (OTP) and integrates the common high-voltage circuitry needed for industrial binary sensors into a single-device solution. Integrated transient protection meets IEC60255-5 surges up to ±1.3kV.

The output of the device can be configured for high-side (pnp), low-side (npn), or push-pull operation through OTP. Additionally, the device features an OTP option for the internal low-dropout (LDO) regulator, allowing the user to select a 3.3V or 5V output, as well as an option to configure the device for sensors with normally open (NO) or normally closed (NC) logic. Also configurable during OTP is the timing of the power-on reset (POR) delay. OTP programming options are performed with the sensor interface pins (V_{CC}, DO, and GND) using the 1-Wire® interface protocol.

The MAX14832 operates from a wide 4.75V to 34V supply and is available in a 10-pin TDFN-EP (3mm x 3mm) package and 9-bump wafer-level package (WLP) (1.6mm x 2.0mm). The device functions over the extended -40°C to +85°C temperature range.

Applications

- Industrial Binary Sensors
- Proximity Switches
- Capacitive and Inductive Sensors

Benefits and Features

- High Configurability
  - OTP Configurable Through Sensor Interface Pins
  - Programmable High-Side (pnp), Low-Side (npn), or Push-Pull Driver
  - LDO with Selectable 3.3V or 5V Output Voltage
  - Optional Pulse Stretching
  - Programmable POR Delay
  - Programmable NO/NC Logic
- Robust Design
  - Reverse-Polarity Protection
  - Hot-Plug Protection
  - Short-Circuit Protection on DO
  - Surge Protection
    - ±1.3kV/500Ω IEC 60255-5
  - ESD Protection
    - ±12kV IEC61000-4-2 Air-Gap Discharge Method
    - ±8kV IEC61000-4-2 Contact Discharge Method
- Glitch Filtering on Logic Input
- Accelerated Demagnetization of Inductive Load
- Overtemperature Protection
- Saves Space on Board
  - 10-Pin TDFN-EP Package
  - Ultra-Small (1.6mm x 2.0mm) 9-Bump WLP
  - Dual, Integrated 4.5mA LED Drivers

Typical Application Circuit

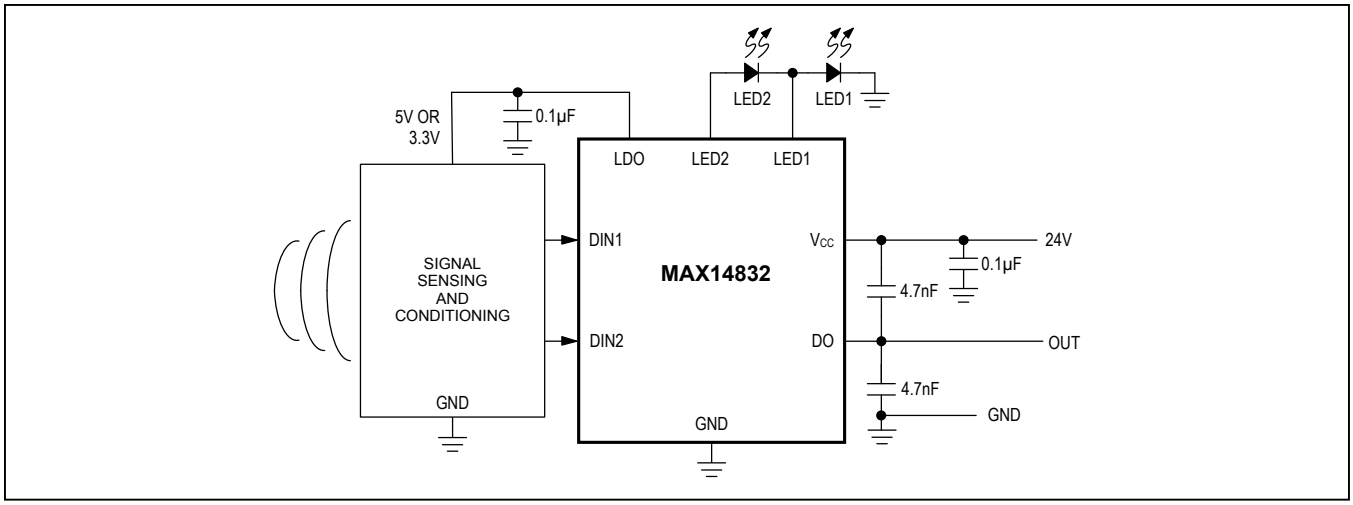

Ordering Information ***appears at end of data sheet.***

1-Wire is a registered trademark of Maxim Integrated Products, Inc.

maxim integrated™

Absolute Maximum Ratings

(All voltages referenced to GND.)
V_{CC} ..... -36V to +36V
LDO ..... -0.3V to +6V
DO ..... the higher of (V_{CC} - 36V) and -36V to the lesser of (V_{CC} + 36V) and +36V
DIN1, DIN2 ..... -0.3V to +6V
LED1, LED2 ..... -0.3V to the higher of (V_{CC} - 0.3V) and +0.3V

Continuous Power Dissipation (T_A = +70°C)
TDFN (derate 24.4mW/°C above +70°C) 1951.2mW
WLP (derate 14.1mW/°C above +70°C) 1225mW
Operating Temperature Range ..... -40°C to +85°C
Storage Temperature Range ..... -65°C to +150°C
Maximum Junction Temperature ..... +150°C
Lead Temperature (soldering, 10s) ..... +300°C
Soldering Temperature (reflow) ..... +260°C

Stresses beyond those listed under "Absolute Maximum Ratings" may cause permanent damage to the device. These are stress ratings only, and functional operation of the device at these or any other conditions beyond those indicated in the operational sections of the specifications is not implied. Exposure to absolute maximum rating conditions for extended periods may affect device reliability.

Package Thermal Characteristics (Note 1)

TDFN
Junction-to-Ambient Thermal Resistance (θ_{JA}) ..... 41°C/W
Junction-to-Case Thermal Resistance (θ_{JC}) ..... 9°C/W

WLP
Junction-to-Ambient Thermal Resistance(θJA)... 71°C/W

Note 1: Package thermal resistances were obtained using the method described in JEDEC specification JESD51-7, using a four-layer board. For detailed information on package thermal considerations, refer to www.maximintegrated.com/thermal-tutorial.

Electrical Characteristics

(V_{CC} = 4.75V to +34V, V_{GND} = 0V, C_{VCC} = 0.1µF, C_{LDO} = 0.1µF, all logic inputs at V_{LDO} or GND, T_A = -40°C to +85°C, unless otherwise noted. Typical values are at V_{CC} = +24V and T_A = +25°C.) (Note 2)

PARAMETER	SYMBOL	CONDITIONS	MIN	TYP	MAX	UNITS
POWER SUPPLY						
V_{CC} Supply Voltage	V_{CC}	V_{LDO} = 3.3V	4.75		34	V
		V_{LDO} = 5V	7		34	
V_{CC} Supply Current, Normal Operation	I_{CC}	V_{CC} = 24V, no external load on LDO or DO (Note 3)			1.2	mA
OTP MODE						
V_{CC} Supply Voltage to Access OTP Mode	$V_{CC,OA}$	T_A = 0°C to +85°C	3.8		4.1	V
V_{CC} Supply Current to Access OTP Mode	$I_{CC,OA}$	3.8V < V_{CC} < 4.1V			1.2	mA
V_{CC} Supply Voltage During OTP (Note 4)	$V_{CC,OTP}$		12			V
V_{CC} Supply Current During OTP (Note 4)	$I_{CC,OTP}$	12V < V_{CC} < 34V		8		mA
DO Receiver Rising Input Threshold	$V_{DO_RX_R}$	OTP mode		1.2	2	V
DO Receiver Falling Input Threshold	$V_{DO_RX_F}$	OTP mode	0.6	1.1		V
DO Pullup Voltage During 1-Wire Communications	$V_{DO,PU}$	OTP mode			5.5	V
DO V_{OL} Voltage During 1-Wire Communications		100Ω pullup between DO and V_{CC}, V_{DO} = $V_{DO,PU}$			1.6	V

Electrical Characteristics (continued)

(V_{CC} = 4.75V to +34V, V_{GND} = 0V, C_{VCC} = 0.1µF, C_{LDO} = 0.1µF, all logic inputs at V_{LDO} or GND, T_A = -40°C to +85°C, unless otherwise noted. Typical values are at V_{CC} = +24V and T_A = +25°C.) (Note 2)

PARAMETER	SYMBOL	CONDITIONS	MIN	TYP	MAX	UNITS
DRIVER (DO)						
Output-Voltage High	V_{OH_DO}	High-side on, I_{DO} = 100mA	V_{CC} - 1.7V			V
Output-Voltage Low	V_{OL_DO}	Low-side on, I_{DO} = -100mA			1.6	V
Current Protection Threshold	$\|I_{DO_CL}\|$	Low-side or high-side on	120		170	mA
DO Leakage Current	I_{DO_LEAK}	DO = three-state, V_{DO} = 0V to (V_{CC} – 1V), during safe mode, thermal shutdown, and POR delay	-10		+10	µA
DO Weak Pulldown in High-Side Mode	I_{DO_PD}	High-side off, V_{DO} = V_{CC} – 1V	-35	-20	-10	µA
DO Weak Pullup in Low-Side Mode	I_{DO_PU}	Low-side off, V_{DO} = 0V	10	20	35	µA
DO Positive Inductive Clamping Voltage (Note 5)	$V_{DO_CL_P}$	Kickback current = 1mA flowing into DO, low side off	36	42		V
DO Negative Inductive Clamping Voltage (Note 5)	$V_{DO_CL_N}$	Kickback current = 100mA flowing out of DO, high side off		V_{CC} - 42	V_{CC} - 36	V
LOGIC INPUTS (DIN1, DIN2)						
Logic Input Voltage Low	V_{IL}				0.8	V
Logic Input Voltage High	V_{IH}		2			V
Logic Input Leakage Current	I_{LEAK}	DIN_ = GND or V_{LDO}	-1		+1	µA
LED DRIVER OUTPUTS (LED1, LED2)						
LED Current Source	I_{LED}	V_{LED1} = V_{LED2} = 4V	4		5	mA
LDO						
Output Voltage	V_{LDO}	LDO in 3.3V mode, 4.75V ≤ V_{CC} ≤ 34V, I_{LDO} = 10mA	3	3.3	3.6	V
		LDO in 5V mode, 7V ≤ V_{CC} ≤ 34V, I_{LDO} = 10mA	4.5	5	5.5	
Short-Circuit Current	I_{LDO_SC}	LDO connected to GND	15	45		mA
Power-Supply Rejection Ratio	PSRR	V_{CC} = V_{CC_DC} + V_{CC_SIN}, 5V ≤ V_{CC_DC} ≤ 34V, RMS of V_{CC_SIN} = 10% x V_{CC_DC}, I_{LDO} = 300µA, f = 50Hz (LDO in 3.3V mode) or 300Hz (LDO in 5V mode)			20	mV
Load Regulation	LR	0.1mA < I_{LDO} < 10mA, 0.1µF bypass capacitor		0.025		%

Electrical Characteristics (continued)

(V_{CC} = 4.75V to +34V, V_{GND} = 0V, C_{VCC} = 0.1µF, C_{LDO} = 0.1µF, all logic inputs at V_{LDO} or GND, T_A = -40°C to +85°C, unless otherwise noted. Typical values are at V_{CC} = +24V and T_A = +25°C.) (Note 2)

PARAMETER	SYMBOL	CONDITIONS	MIN	TYP	MAX	UNITS
POWER-ON RESET (POR)						
POR Threshold	V_{T_VCC}	LDO in 3.3V mode, V_{CC} rising with DO active	4.1		4.7	V
		LDO in 5V mode, V_{CC} rising with DO active	6		7	
POR Threshold Hysteresis	V_{TH_VCC}	LDO in 3.3V or 5V mode		0.5		V
PROTECTION						
V_{CC}, DO, GND (Note 6)		IEC61000-4-2 Air-Gap Discharge		±12		kV
		IEC61000-4-2 Contact Discharge		±8		
		IEC 60255-5 1.2µs/50µs Surge 500Ω/0.5µF		±1.3		
All Other Pins		Human Body Model		±2		kV
Thermal Shutdown	T_{SH}			135		°C
Thermal-Shutdown Hysteresis	T_{SH_HYS}			13		°C
Reverse-Polarity Current	I_{RP}	Any combination of V_{CC}, DO, and GND			1	mA

AC Electrical Characteristics

(V_{CC} = 4.75V to +34V, V_{GND} = 0V, C_{VCC} = 0.1µF, C_{LDO} = 0.1µF, all logic inputs at V_{LDO} or GND, T_A = -40°C to +85°C, unless otherwise noted. Typical values are at V_{CC} = +24V, and T_A = +25°C.)

PARAMETER	SYMBOL	CONDITIONS		MIN	TYP	MAX	UNITS
POR TIMING							
POR Delay	t_{PUD}	Delay from POR threshold reached to DO and LED drivers active	Delay = 00		40	50	ms
			Delay = 01		80	100	
			Delay = 10		160	200	
			Delay = 11		240	300	
DRIVER TIMING							
Driver Propagation Delay	t_{PLH}	Low-to-high, V_{CC} = 34V, C_L = 1nF, 50% to 50%, Figure 1			6.4	20	µs
	t_{PHL}	High-to-low, V_{CC} = 34V, C_L = 1nF, 50% to 50%, Figure 1			6.4	20	
DO Rise Time	t_{RISE}	V_{CC} = 34V, C_L = 1nF, 10% to 90%			6	20	µs
DO Fall Time	t_{FALL}	V_{CC} = 34V, C_L = 1nF, 90% to 10%			6	20	µs
Rejected Pulse Length by Glitch Filter	t_{GL_PR}	Glitches input at DIN1/DIN2		300			ns
Admitted Pulse Length Through Glitch Filter	t_{GL_AD}			1.5			µs
Pulse Stretch Output Pulse Length	t_{PS}	DIN_ input pulse length < t_{PS}, pulse stretching programmed as enabled		3.5	4	4.5	ms

AC Electrical Characteristics (continued)

(V_{CC} = 4.75V to +34V, V_{GND} = 0V, C_{VCC} = 0.1µF, C_{LDO} = 0.1µF, all logic inputs at V_{LDO} or GND, T_A = -40°C to +85°C, unless otherwise noted. Typical values are at V_{CC} = +24V, and T_A = +25°C.)

PARAMETER	SYMBOL	CONDITIONS	MIN	TYP	MAX	UNITS
OVERCURRENT SHUTDOWN TIMING						
Overcurrent Detection Time	t_{ISDET}		100	120	140	µs
Overcurrent Turn-Off Time	t_{ISOFF}		3.5	4	5.5	ms

Note 2: All devices are 100% production tested at T_A = +25°C. Limits over temperature are guaranteed by design.
Note 3: When DIN1 or DIN2 is near the logic input threshold, the V_{CC} supply current increases by a maximum of 275µA for each input.
Note 4: Supply voltage required at V_{CC} to ensure reliable OTP.
Note 5: See the *Voltage Transients* section.
Note 6: ESD and surge protection for V_{CC} is only guaranteed with an external 0.1µF capacitor connected between V_{CC} and GND.

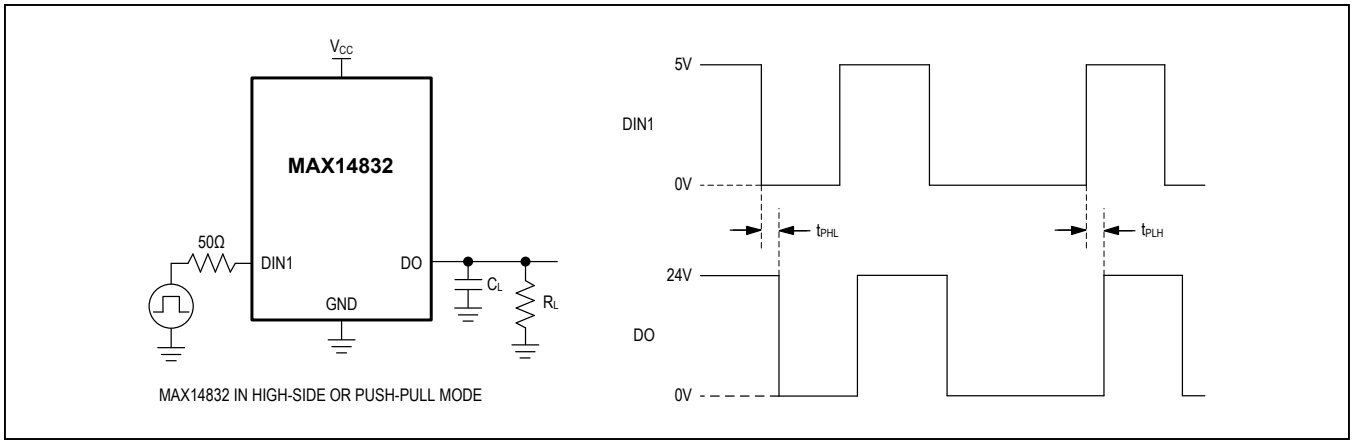

Figure 1. Propagation Delay Timing Measurements

Typical Operating Characteristics

(V_{CC} = +24V, V_{GND} = 0V, all logic inputs at V_{LDO} or GND, and T_A = +25°C, unless otherwise noted.)

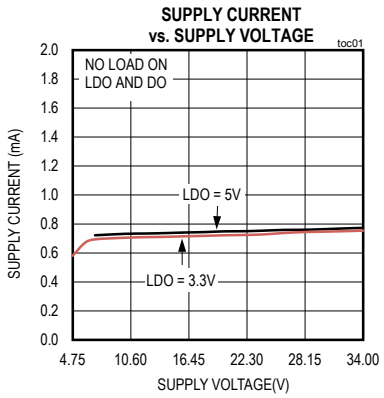

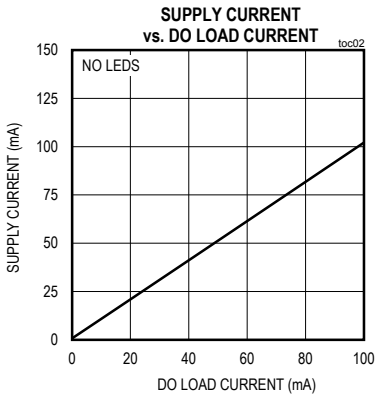

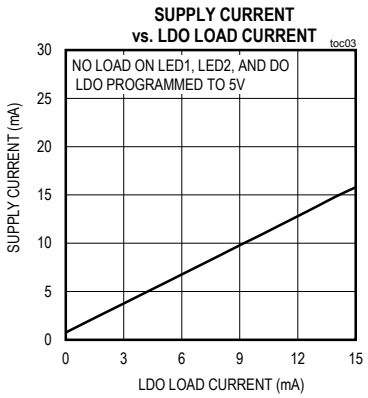

Typical Operating Characteristics

(V_{CC} = +24V, V_{GND} = 0V, all logic inputs at V_{LDO} or GND, and T_A = +25°C, unless otherwise noted.)

SUPPLY CURRENT vs. LDO LOAD CURRENT

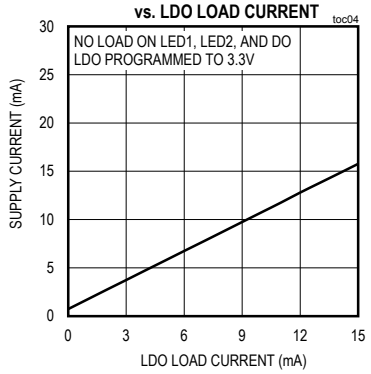

DIN_ LOGIC THRESHOLD vs. SUPPLY VOLTAGE

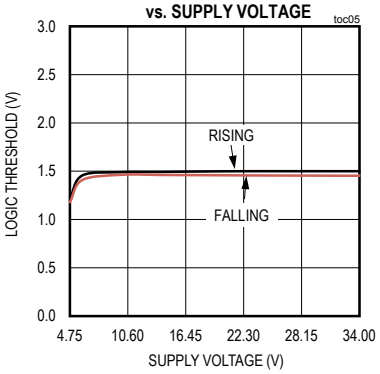

LDO OUTPUT VOLTAGE vs. LOAD CURRENT

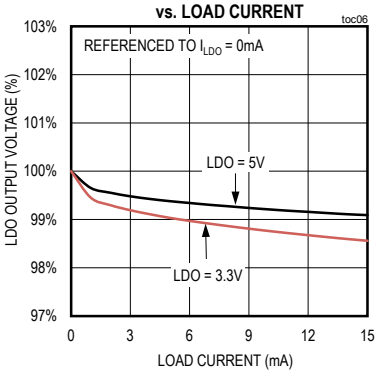

LDO OUTPUT VOLTAGE vs. SUPPLY VOLTAGE

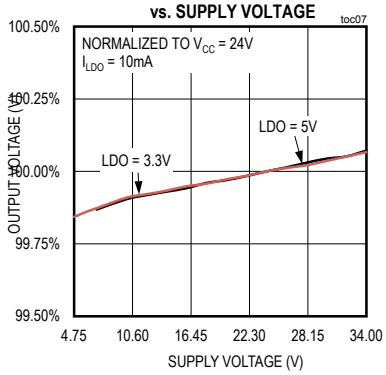

LDO LOAD-TRANSIENT RESPONSE

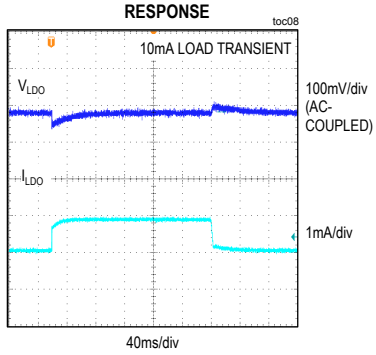

LDO SHORT-CIRCUIT CURRENT vs. SUPPLY VOLTAGE

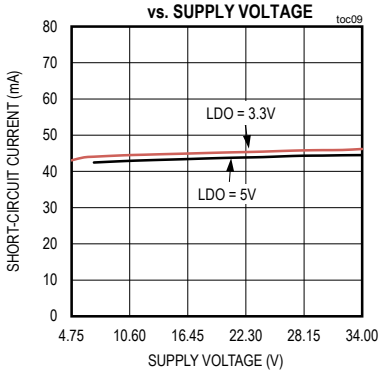

DO SHORT-TO-GROUND RESPONSE

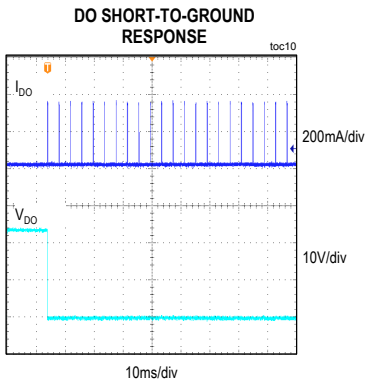

LDO PSRR vs. FREQUENCY

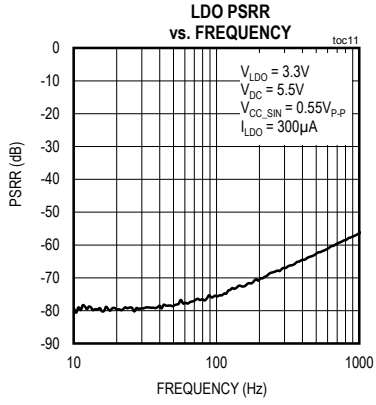

DO PROPAGATION DELAY vs. LOAD CURRENT

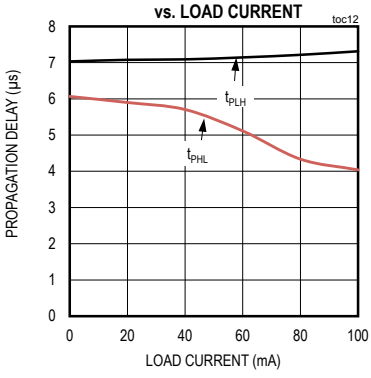

Typical Operating Characteristics (continued)

(V_{CC} = +24V, V_{GND} = 0V, all logic inputs at V_{LDO} or GND, and T_A = +25°C, unless otherwise noted.)

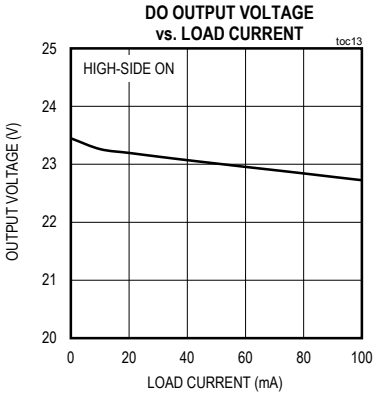

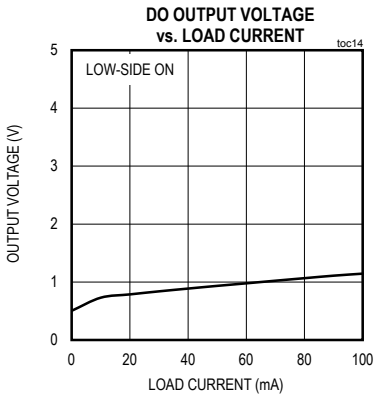

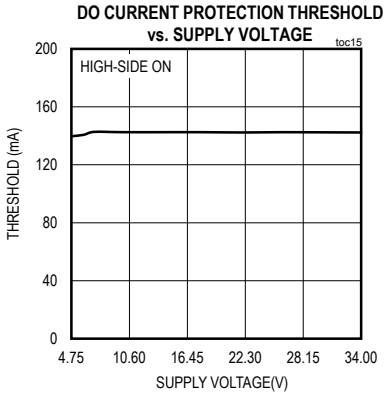

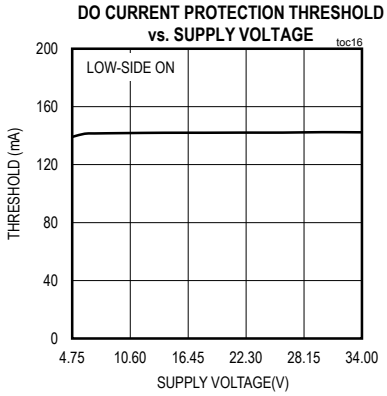

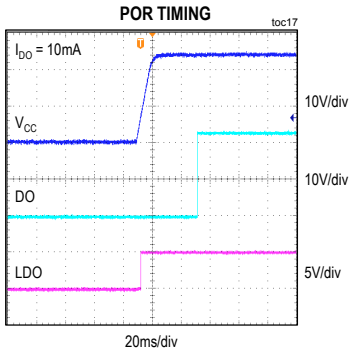

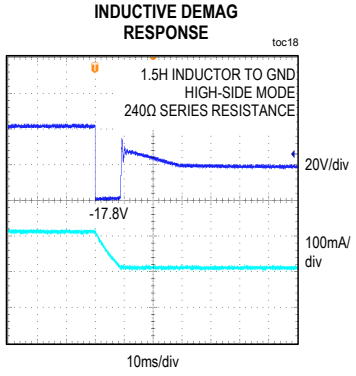

Typical Operating Characteristics (continued)

(V_{CC} = +24V, V_{GND} = 0V, all logic inputs at V_{LDO} or GND, and T_A = +25°C, unless otherwise noted.)

INDUCTIVE DEMAG RESPONSE

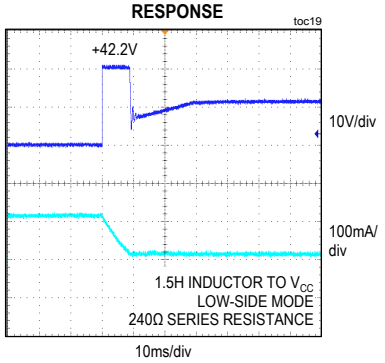

DO LEAKAGE CURRENT vs. TEMPERATURE

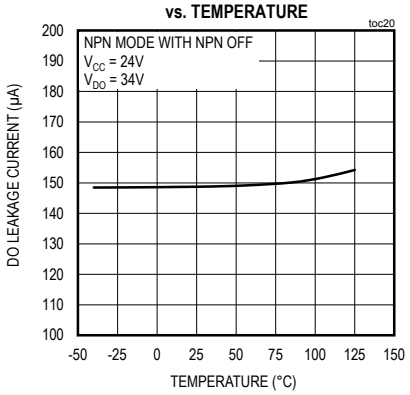

DO LEAKAGE CURRENT vs. TEMPERATURE

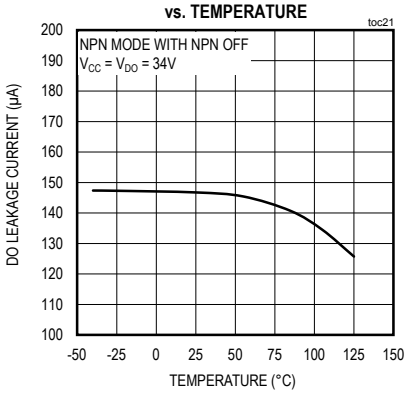

DO LEAKAGE CURRENT vs. TEMPERATURE

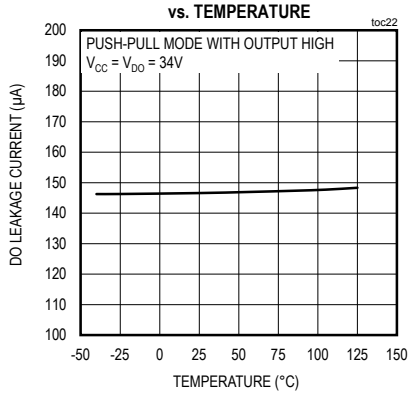

Bump/Pin Configurations

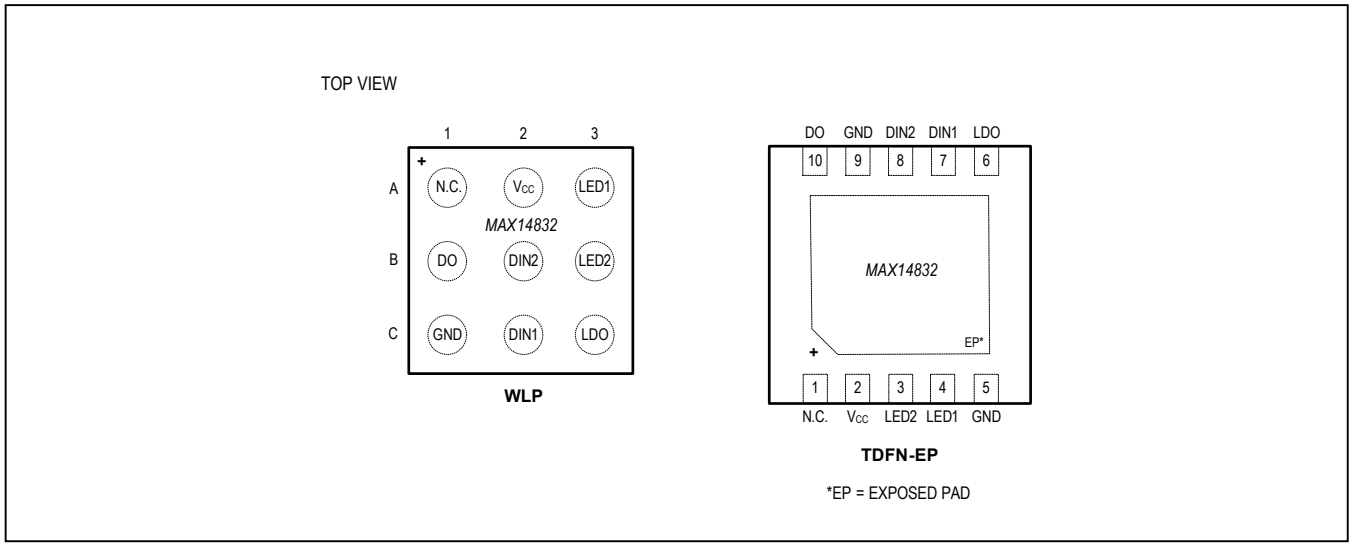

Bump/Pin Descriptions

BUMP (WLP)	PIN (TDFN)	NAME	FUNCTION
A1	1	N.C.	No Connection. Internally connected. Do not connect externally.
A2	2	V_{CC}	Power-Supply Input. Bypass V_{CC} with a 0.1µF ceramic capacitor as close as possible to the pin.
A3	4	LED1	LED1 Driver Output. Connect to anode of LED1 and cathode of LED2. See Table 1 or 2.
B1	10	DO	Driver Output. Programmable with OTP. Controlled by DIN1 and DIN2. See Table 1 or 2.
B2	8	DIN2	Driver Input 2. See Table 1 or 2.
B3	3	LED2	LED2 Driver Output. Connect to anode of LED2. See Table 1 or 2.
C1	5, 9	GND	Ground
C2	7	DIN1	Driver Input 1. See Table 1 or 2.
C3	6	LDO	Linear Regulator Output. Programmable to 3.3V or 5V with OTP.
—	—	EP	Exposed Pad (TDFN Only). EP is internally connected to GND. Connect to a large ground plane to maximize thermal performance. Not intended as an electrical connection point.

Functional Diagram

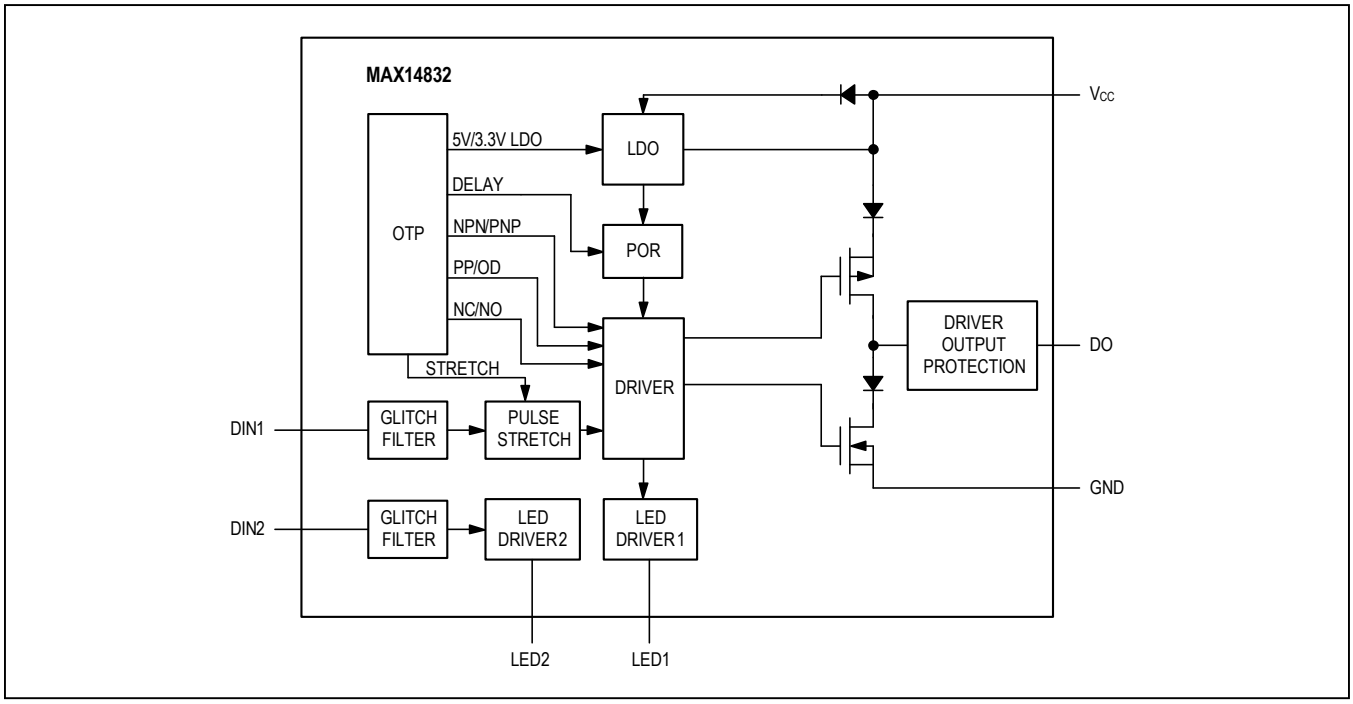

Detailed Description

The MAX14832 is a 24V, 100mA driver for industrial binary sensors. The device is configurable through one-time programming (OTP) and integrates the common high-voltage circuitry needed for industrial binary sensors into a single-device solution. Integrated transient protection meets the IEC 60255-5 standard and protects surges up to ±1.3kV/500Ω. The configurability of the driver output (DO) and linear regulator provides the power required for common industrial binary sensors.

The MAX14832 features multiple configuration options that are user-selected during OTP. The output of the device can be configured for high-side (pnp), low-side (npn), or push-pull operation through OTP. Additionally, the device features an OTP option for the internal low-dropout (LDO) regulator, allowing the user to select a 3.3V or 5V output, as well as an option to configure the logic for sensors that are normally open (NO) or normally closed (NC). Also configurable during OTP is the timing of the power-on reset (POR) delay. OTP programming options are performed using the sensor interface pins (V_{CC}, DO, and GND) using the 1-Wire interface protocol.

The two integrated LED drivers in the MAX14832 provide visual feedback of the state of the sensor. The device delivers the robust design necessary in industrial applications. The DO, V_{CC}, and GND interface pins are protected against reverse-polarity connection, short circuits, and ESD. The device also features fast inductive demagnetization of GND-connected and V_{CC}-connected inductive loads up to 1.5H. Overcurrent protection guards the MAX14832 from damage due to overheating during overcurrent fault conditions.

LDO Linear Regulator

The MAX14832 features an integrated linear regulator for driving loads up to 15mA. The output voltage of the regulator can be configured to either 3.3V or 5V during OTP. Before initial OTP, the linear regulator is configured to output 3.3V. The configurable output voltage and the 15mA load driving capability make this a suitable regulator for most common industrial sensors. During thermal shutdown, the regulator is turned off.

Power-On Reset (POR)

The MAX14832 includes an OTP configurable power-on delay between the time the supply voltage exceeds the POR threshold until the DO output is enabled. During the POR delay, the DO output is high-impedance and the LED drivers, LED1 and LED2, are inactive. The maximum POR delay time is programmable to 50ms, 100ms, 200ms, and 300ms.

Reverse-Polarity Protection

Reverse-polarity protection is built into the MAX14832. The protection circuitry protects the device against accidental reverse-polarity connections to the V_{CC}, DO, and GND pins. During a reverse-polarity plugin event, the maximum current drawn through V_{CC}, DO, and GND is 1mA. The maximum voltage between any of the pins may not exceed $36V_{DC}$ at any time.

Driver Output (DO)

The driver output of the MAX14832 can be programmed to either low-side, high-side, or push-pull mode and is configurable during OTP. The driver also includes configurable modes making the sensor able to operate normally open or normally closed. See Table 1 for the LED and DO truth table for the normally open configuration. See Table 2 for the LED and DO truth table for the normally closed configuration. Before OTP, the DO pin is high impedance.

Glitch Filter

To eliminate false sensor triggers and prevent unnecessary driver state changes, the MAX14832 contains glitch filters on the digital inputs, DIN1 and DIN2. The glitch filter rejects all pulses with a length up to 300ns. Glitches with a length between 300ns and 1µs can be filtered out.

Pulse Stretching

The MAX14832 features an optional pulse-stretching mode selectable during OTP. When pulse stretching is enabled, positive pulses received at DIN1 that are longer than the glitch filter rejected pulse length and shorter than 4ms are stretched to a pulse width of 4ms at DO. Negative pulses are not stretched. See Figure 2, which illustrates the pulse stretching function.

Fast Demagnetization of Inductive Loads

The MAX14832 contains internal circuitry that enables rapid demagnetization of inductive loads. Inductive loads up to 1.5H can be magnetized and demagnetized by the MAX14832.

In the case of an inductive load connected to GND (Figure 3), the inductor is magnetized as DO is driven high. When the DO output switches to the output low state, there is a consequential negative voltage kickback on the DO pin, which is shunted to V_{CC} by the internal clamp. With the clamp engaged, the demagnetization voltage across the load for a negative voltage kickback event is V_{CC} - 42V (typ). As the voltage supplied to V_{CC} increases, the demagnetization voltage across the inductor decreases. Consequently, the demagnetization time increases with voltage supplied to V_{CC}.

Similarly, with a load connected to V_{CC} (Figure 4), the inductor is magnetized as DO is driven low. When the DO output switches to the output high state, there is a consequential positive voltage kickback at the DO pin, which is shunted to GND by the internal clamp. With the clamp engaged, the demagnetization voltage across the load for a positive voltage kickback event is 42V (typ).

The clamping structure of the MAX14832 for high-side mode is shown in Figure 3, and the clamping structure for the device in low-side mode is shown in Figure 4.

DO Short-Circuit Protection

When the driver output (DO) of the MAX14832 detects a short-circuit condition for 120µs (typ), the driver is immediately turned off and enters autoretry mode. In autoretry mode, DO is turned off for 4ms, then powered up for 120µs. If the short-circuit condition has not been removed, the cycle repeats and the device turns off for 4ms, then back on for 120µs, reducing the overall power dissipation at DO.

Table 1. Normally Open LED and DO Truth Table

DIN1	DIN2	LED1	LED2	PNP	NPN	PP
LOW	LOW	OFF	OFF	OFF	OFF	GND
HIGH	LOW	ON	OFF	ON (V_{CC})	ON (GND)	V_{CC}
HIGH	HIGH	ON	ON	ON (V_{CC})	ON (GND)	V_{CC}
LOW	HIGH	OFF	ON	OFF	OFF	GND

LED Output Drivers

The device allows the user to receive visual feedback of the state of the sensor using two LED driver outputs. The LED1 and LED2 current sources turn on and off according to Table 1 if the device is programmed for normally open operation or Table 2 if the device is programmed for normally closed operation. If the device has not yet been programmed or if it has entered safe mode, the LEDs blink alternately with half-second pulse durations to signal the device's state to the operator.

If LED1 and LED2 are used, connect then as shown in the Typical Application Circuit. For low supply voltages of V_{CC} = 5V, ensure that the sum of the two LED's forward voltages is less than about 4V. To use only the LED1 driver, set DIN2 low and leave the LED2 output unconnected. To use only the LED2 driver, connect LED1 to GND. Leave LED2 and LED1 unconnected if neither LED driver is used.

Table 2. Normally Closed LED and DO Truth Table

DIN1	DIN2	LED1	LED2	PNP	NPN	PP
LOW	LOW	ON	OFF	ON (V_{CC})	ON (GND)	V_{CC}
HIGH	LOW	OFF	OFF	OFF	OFF	GND
HIGH	HIGH	OFF	ON	OFF	OFF	GND
LOW	HIGH	ON	ON	ON (V_{CC})	ON (GND)	V_{CC}

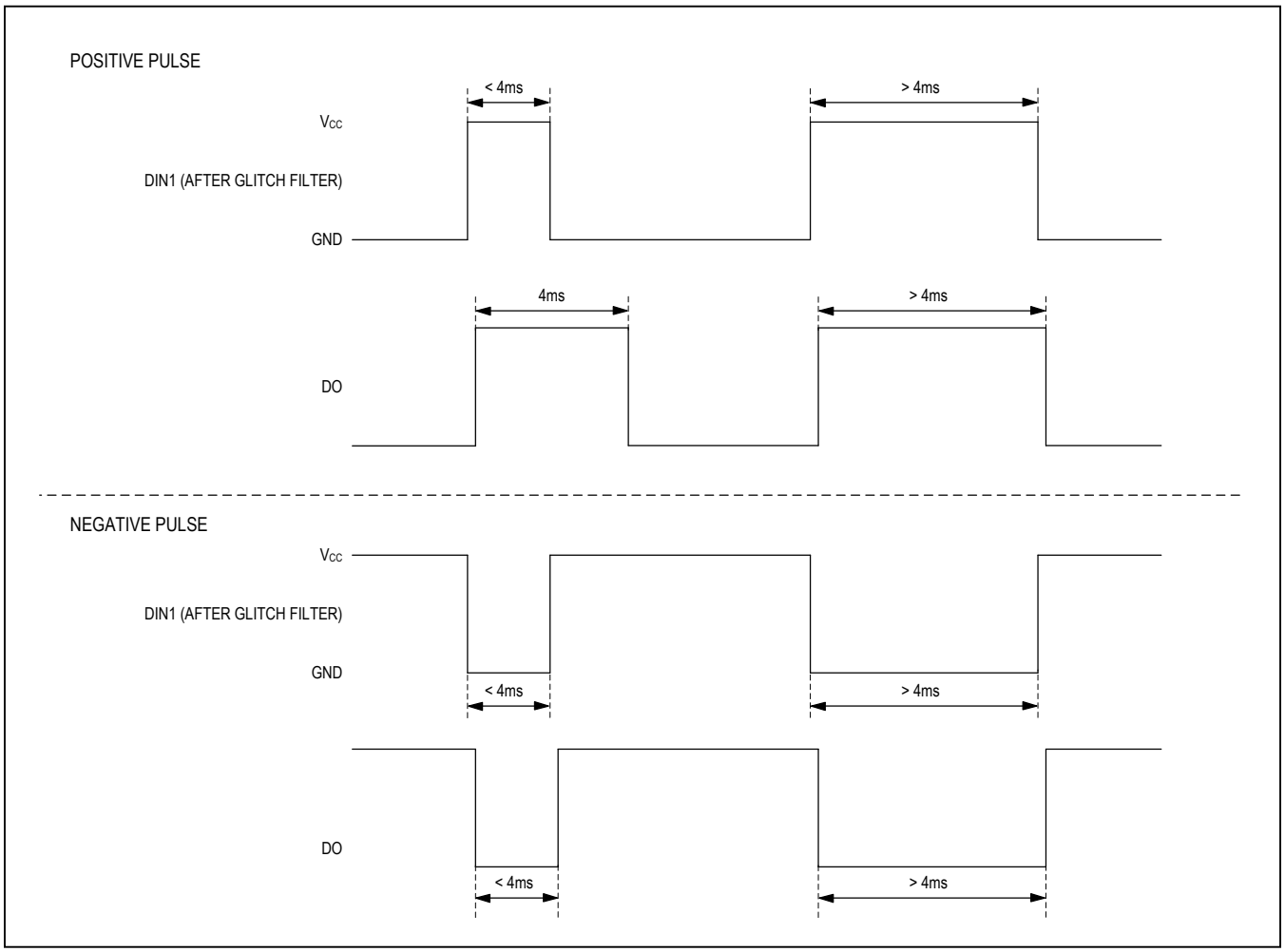

Figure 2. Pulse Stretching

Safe Mode

Data retention of the OTP bits is highly important in industrial systems. The MAX14832 contains internal error detection circuitry on the OTP bits to ensure that errors are quickly identified. If an error is detected in the OTP block, the DO output becomes high-impedance, the LDO output is set to 3.3V, and the LED outputs pulse alternately with 0.5s pulse durations to signal an error to the user.

Maximum Operating Frequency

Due to the autoretry current-limiting mechanism, the MAX14832 can only detect overcurrent events that occur for longer than 120µs (typ). If the DO driver switches at a higher rate than 4kHz in the case of an overcurrent condition like a short circuit present at DO, the DO current of the MAX14832 is not limited and the device's temperature rises. If the temperature rise continues, the die temperature is limited by thermal shutdown.

Voltage Transients

Short-duration voltage transients that rise above the absolute maximum rating of the V_{CC} pin occur during ESD, burst, and hot plug events. The device cannot be damaged with a 0.1µF bypass capacitor on the V_{CC} line. Transients due to inductive kickback on DO when driving inductive loads up to 1.5H at 100mA or less can also bring the DO voltage above the absolute maximum rating, yet not damage the device. The absolute maximum ratings for V_{CC} and DO should not be violated for any length of time by external sources.

Thermal Protection

The MAX14832 contains circuitry to protect itself from thermal overload. When the die temperature rises above +135°C (typ), the DO driver, LED drivers, and linear regulator automatically turn off until the die temperature returns to a safe level.

One-Time Programming (OTP)

The MAX14832 features a high level of configurability through OTP. Once programmed, the selected functionality remains continuously and is not reprogrammable. Program the configurable options using the sensor interface pins (V_{CC}, DO, and GND) and the 1-Wire interface protocol. For protocol information on the 1-Wire interface, see the design resources section on the 1-Wire Devices page and the 1-Wire tutorial video. The MAX14832 is only compatible with the standard mode. The MAX14832 OTP guide outlines the timing information required for prgramming the MAX14832 as well as other pertinent information for OTP of the MAX14832 through the 1-Wire interface. The flow chart (Figure 9) outlines the automatic OTP procedure.

To enter OTP mode, ensure the die temperature is between 0°C and +85°C. Then, with the V_{CC} voltage between 3.8V and 4.1V, use the 1-Wire interface standard to write the OTP Mode Code (0x3C) to the OTPModeEna (0x2A) register. This write enables OTP mode, but the device does not yet enter the mode. Finally, write the validation code (0x96) to the OTPModeVal (0x36) register to enter OTP mode.

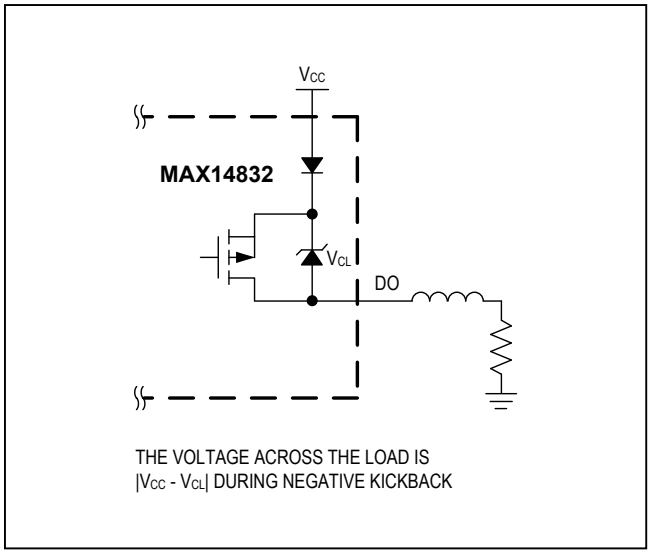

Figure 3. High-Side Mode with Ground-Connected Load

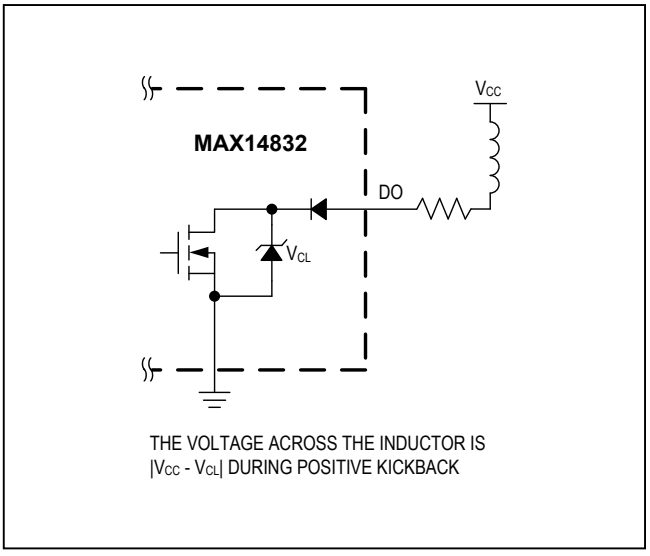

Figure 4. Low-Side Mode with Supply-Connected Load

When the above steps are completed, set the voltage at V_{CC} between 12V and 34V with a current supply capability of at least 15mA to ensure sufficient supply power for OTP and continue with the process detailed in Figure 9. See the OTP Register Map for the OTP process.

Cycle the power and generate a POR or write any value other than 0x96 to the OTPModeVal (0x36) register to exit OTP mode.

Prior to OTP, the operation of the MAX14832 in the desired configuration can be evaluated by entering OTP mode as described above and writing the desired bit configuration to the Trm1 (0x07) register. Once the configuration is written, write a 0 to bit [0] of the OTPCnt (0x08) register then write any value other than 0x96 to the OTPModeValid (0x36) register to exit OTP mode. The device reads the configuration bits (LDO5, PORD[1:0], NO, PP, NPN, PULSESTR) and keeps it until V_{CC} reaches the POR threshold.

Applications Information

Extended ESD Protection

ESD-protection structures are incorporated on all pins to protect against electrostatic discharges up to ±2kV (HBM)encountered during handling and assembly. VCC and DO, and GND are further protected against ESD up to ±12kV (Air-Gap Discharge), and ±8kV (Contact Discharge) without damage. The ESD structures withstand high ESD both in normal operation and when the device is powered down. After an ESD event, the devices continue to function without latchup.

ESD Test Conditions

ESD performance depends on a variety of conditions. Contact Maxim for a reliability report that documents test methodology and test results.

Human Body Model

Figure 5 shows the Human Body Model. Figure 6 shows the current waveform it generates when discharged into a low impedance. This model consists of a 100pF capacitor charged to the ESD voltage of interest that is then discharged into the device through a 1.5kΩ resistor.

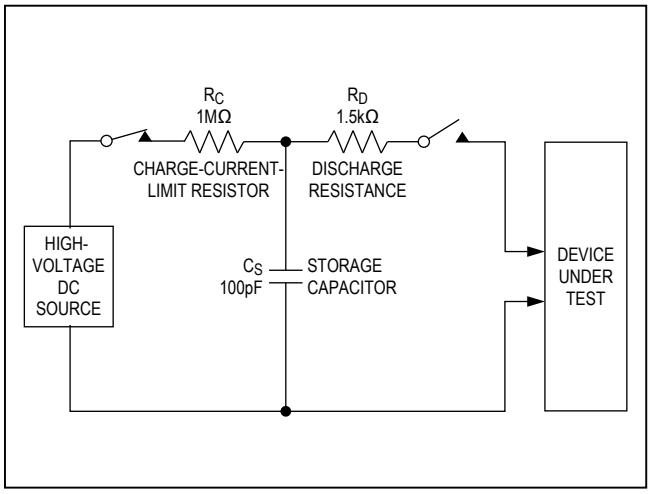

Figure 5. Human Body ESD Test Model

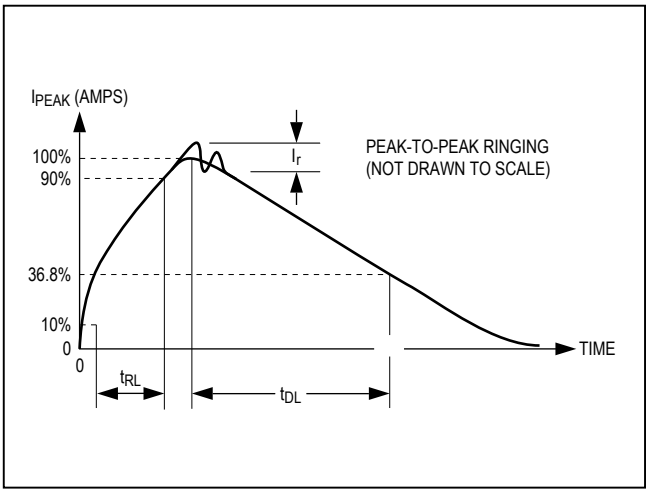

Figure 6. Human Body Current Waveform

IEC 61000-4-2

The IEC 61000-4-2 standard covers ESD testing and performance of finished equipment. It does not specifically refer to integrated circuits. The major difference between tests done using the HBM and IEC 61000-4-2 is higher peak current in IEC 61000-4-2, because series resistance is lower in the IEC 61000-4-2 model. Hence, the ESD withstand voltage measured to IEC 61000-4-2 is generally lower than that measured using the HBM. Figure 7 shows the IEC 61000-4-2 model and Figure 8 shows the current waveform for the ±8kV, IEC 61000-4-2, Level 4, ESD Contact-Discharge Method.

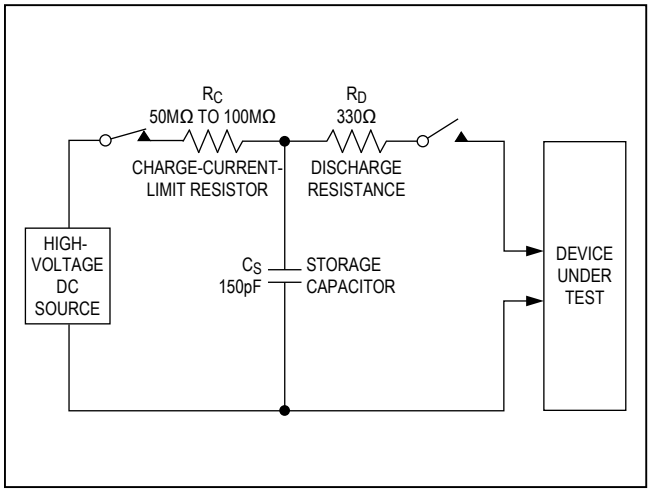

Figure 7. IEC 6100-4-2 ESD Test Model

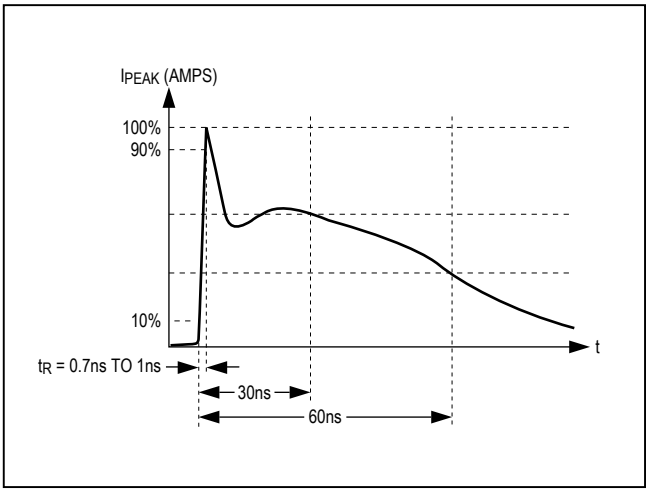

Figure 8. IEC 6100-4-2 ESD Generator Current Waveform

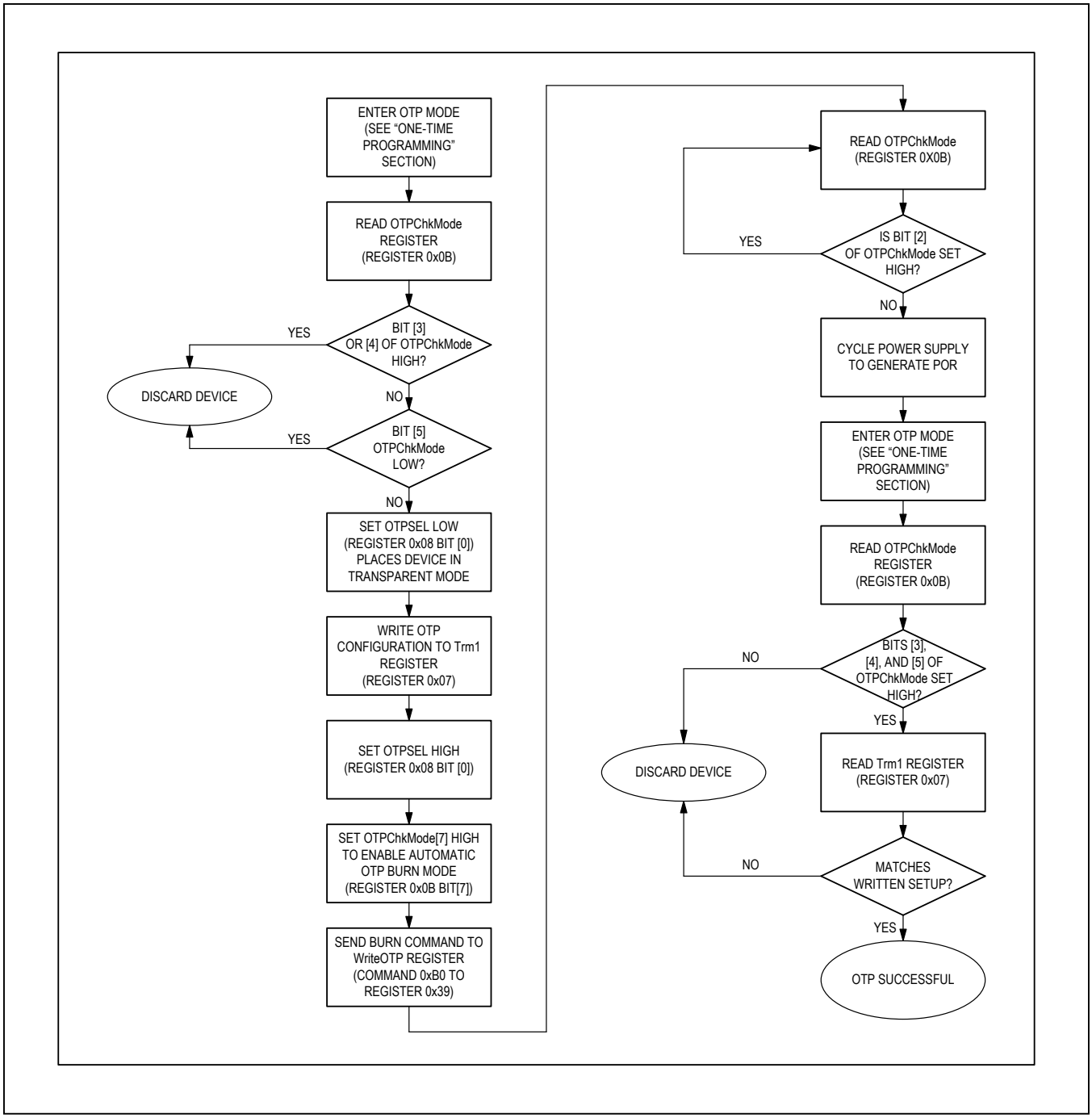

Figure 9. OTP Procedure Flow Chart

OTP Register Map

ADDRESS	NAME	B7	B6	B5	B4	B3	B2	B1	B0
0x00	RevID	RevID[7:0]							
0x07	Trm1	RFU	LDO5	PORD[1:0]		NO	PP	NPN	PULSESTR
0x08	OTPCnt	RES							OTPSEL
0x0B	OTPChkMode	AutoOTPMode	AutoOTPSlw	MLck (Read Only)	CLck (Read Only)	B3Lck (Read Only)	OTPRun (Read Only)	RES	
0x2A	OTPModeEna	OTPModeCode							
0x36	OTPModeVal	OTPModeValid							
0x39	WriteOTP	WRITEOTP_CMD							

Detailed OTP Register Map

FIELD NAME	TYPE	BITS	DEFAULT	DESCRIPTION
RevID (0x00)				
RevID	Read Only	[7:0]	—	Chip Revision
Trm1 (0x07)				
RFU	—	[7]	—	Reserved for future use.
LDO5	Read/Write	[6]	0	LDO 5V Set 0 = LDO set to 3.3V 1 = LDO set to 5V
PORD	Read/Write	[5:4]	00	POR Delay Select 00 = 50ms (max) 01 = 100ms (max) 10 = 200ms (max) 11 = 300ms (max)
NO	Read/Write	[3]	0	Normally Open (NO) or Normally Closed (NC) State Select 0 = Normally closed 1 = Normally open
PP	Read/Write	[2]	0	Push-Pull Driver Output Select 0 = Open-drain driver output 1 = Push-pull driver output
NPN	Read/Write	[1]	0	Low-Side (npn) or High-Side (pnp) Select (If PP = 0) 0 = High-side (pnp) 1 = Low-side (npn)
PULSESTR	Read/Write	[0]	0	Pulse Stretch Enable 0 = Pulse stretching disabled 1 = Pulse stretching enabled

FIELD NAME	TYPE	BITS	DEFAULT	DESCRIPTION
OTPCnt (0x08)				
RES	—	[7:1]	—	Reserved. (Do not overwrite the default setting.)
OTPSEL	Read/Write	[0]	1	OTP Select 0 = OTP cells transparent, data written to register Trm1 passes through OTP cells 1 = OTP cells not transparent, set OTPSEL high for OTP write
OTPChkMode (0x0B)				
AutoOTPMode	Read/Write	7	0	Auto OTP Mode Enable 0 = Auto OTP mode disabled 1 = Auto OTP mode enabled
AutoOTPSlw	Read/Write	6	0	Auto OTP Slow Mode 0 = Auto OTP write time is 100ms 1 = Auto OTP write time is increased to 200ms
MLck	Read Only	5	—	—
CLck	Read Only	4	—	Customer OTP Bank Lock Indicator 0 = OTP bank unlocked and able to be programmed 1 = OTP bank locked, OTP no longer able to be performed
B3Lck	Read Only	3	—	OTP Bank Lock Indicator 0 = OTP bank unlocked and able to be programmed 1 = OTP bank locked
OTPRun	Read Only	2	—	Auto OTP Status Indicator 0 = Auto OTP sequence not active 1 = Auto OTP sequence active
RES	—	[1:0]	—	Reserved
OTPModeEna (0x2A)				
OTPModeCode	Write Only	[7:0]	—	While device is powered with 3.8V ≤ V_{CC} ≤ 4.1V and 0 ≤ T_A ≤ +85°C write 0x3C to this register to enter OTP mode. You must also write the OTP mode validation code to the OTPModeVal(0x36) register.
OTPModeVal (0x36)				
OTPModeValid	Write Only	[7:0]	—	After writing the OTPModeCode to the OTPModeEna (0x2A) register, write 0x96 to this register to validate entry to OTP mode. Writing any value other than 0x96 causes the MAX14832 to exit OTP mode.
WriteOTP (0x39)				
WRITEOTP_CMD	Command Code	[7:0]	—	Enter the command code 0xB0 to begin execution of auto OTP

Ordering Information

PART	TEMP RANGE	PIN-PACKAGE	TOP MARK
MAX14832ETB+T	-40°C to +85°C	10 TDFN-EP*	+AZJ
MAX14832EWL+	-40°C to +85°C	9 WLP	+AKG
MAX14832EWL+T	-40°C to +85°C	9 WLP	+AKG

**EP = Exposed pad.*
+Denotes lead(Pb)-free/RoHS-compliant package.
T = Tape and reel.

Chip Information

PROCESS: BiCMOS

Package Information

For the latest package outline information and land patterns (footprints), go to **www.maximintegrated.com/packages**. Note that a "+", "#", or "-" in the package code indicates RoHS status only. Package drawings may show a different suffix character, but the drawing pertains to the package regardless of RoHS status.

PACKAGE TYPE	PACKAGE CODE	OUTLINE NO.	LAND PATTERN NO.
10 TDFN-EP	T1033-1C	**21-0137**	**90-0003**
9 WLP	W91A2-1	**21-0067**	Refer to **Application Note 1891**

Revision History

REVISION NUMBER	REVISION DATE	DESCRIPTION	PAGES CHANGED
0	3/14	Initial release	—
1	6/14	Add surge protection Updated Do Leakage current specification Added Do Leakage current typical operating characteristics Correct functional block diagram	6
2	1/15	Corrected LDO glitch and updated DO pullup/down limits	3, 4, 9, 12
3	11/15	Added WLP package to *Bump/Pin Description* section and *Ordering Information* table	1–2, 9, 19
4	4/16	Updated text in *LED Output Drivers* section	12

For pricing, delivery, and ordering information, please contact Maxim Direct at 1-888-629-4642, or visit Maxim Integrated's website at www.maximintegrated.com.

Maxim Integrated cannot assume responsibility for use of any circuitry other than circuitry entirely embodied in a Maxim Integrated product. No circuit patent licenses are implied. Maxim Integrated reserves the right to change the circuitry and specifications without notice at any time. The parametric values (min and max limits) shown in the Electrical Characteristics table are guaranteed. Other parametric values quoted in this data sheet are provided for guidance.