19-1940; Rev 0; 4/01

±15kV ESD-Protected, Isolated RS-485/RS-422 Data Interfaces

General Description

The MAX1480EA/MAX1480EC/MAX1490EA/MAX1490EB are complete, electrically isolated, RS-485/RS-422 data communications interface solutions in a hybrid microcircuit. The RS-485/RS-422 I/O pins are protected against ±15kV electrostatic discharge (ESD) shocks, without latchup. Transceivers, optocouplers, and a transformer provide a complete interface in a standard DIP package. A single +5V supply on the logic side powers both sides of the interface.

The MAX1480EC/MAX1490EB feature reduced-slew-rate drivers that minimize EMI and reduce reflections caused by improperly terminated cables, allowing error-free data transmission at data rates up to 160kbps. The MAX1480EA/MAX1490EA driver slew rate is not limited, allowing transmission rates up to 2.5Mbps. The MAX1480EA/MAX1480EC are designed for half-duplex communication, while the MAX1490EA/MAX1490EB feature full-duplex communication.

Drivers are short-circuit current limited and protected against excessive power dissipation by thermal shutdown circuitry that places the driver outputs into a high-impedance state. The receiver input has a fail-safe feature that guarantees a known output ($\overline{RO}$ low for the MAX1480EA/MAX1480EC, RO high for the MAX1490EA/MAX1490EB) if the input is open circuit.

The MAX1480EA/MAX1480EC/MAX1490EA/MAX1490EB withstand $1260V_{RMS}$ (1min) or $1520V_{RMS}$ (1s). Their isolated outputs meet all RS-485/RS-422 specifications. The MAX1480EA/MAX1480EC are available in a 28-pin DIP package, and the MAX1490EA/MAX1490EB are available in a 24-pin DIP package.

.

Applications

Isolated RS-485/RS-422 Data Interface
Transceivers for EMI-Sensitive Applications
Industrial-Control Local Area Networks
Automatic Test Equipment
HVAC/Building Control Networks
Telecom

Selector Guide appears at end of data sheet.

Features

- **Isolated Data Interface, Guaranteed to $1260V_{RMS}$ (1min)**
- **±15kV ESD Protection on I/O Pins**
- **Slew-Rate Limited for Errorless Data Transmission (MAX1480EC/MAX1490EB)**
- **High-Speed, Isolated, 2.5Mbps RS-485/RS-422 Interface (MAX1480EA/MAX1490EA)**
- **Full-Duplex Data Communication (MAX1490EA/MAX1490EB)**
- **Single +5V Supply**
- **Current Limiting and Thermal Shutdown for Driver Overload Protection**
- **Standard 0.6in DIP Packages**
  28-Pin DIP (MAX1480EA/MAX1480EC)
  24-Pin DIP (MAX1490EA/MAX1490EB)

Ordering Information

PART†	TEMP. RANGE	PIN-PACKAGE
MAX1480EACPI	0°C to +70°C	28 Wide Plastic DIP*
MAX1480EAEPI	-40°C to +85°C	28 Wide Plastic DIP*

Ordering Information continued at end of data sheet.

† *Data rate for A parts is up to 2.5Mbps. Data rate for C parts is up to 250kbps.*

**See Reliability section at end of data sheet.*

Pin Configurations

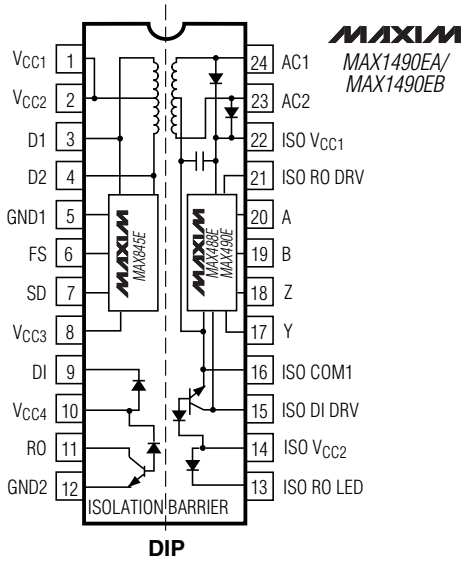

Pin Configurations continued at end of data sheet.

For pricing, delivery, and ordering information, please contact Maxim/Dallas Direct! at 1-888-629-4642, or visit Maxim's website at www.maxim-ic.com.

±15kV ESD-Protected, Isolated RS-485/RS-422 Data Interfaces

ABSOLUTE MAXIMUM RATINGS

With Respect to GND_
- Supply Voltage ($V_{CC_}$).....-0.3V to +6V
- Control Input Voltage (SD, FS).....-0.3V to ($V_{CC_}$ + 0.3V)
- Receiver Output Voltage (RO, RO).....-0.3V to ($V_{CC_}$ + 0.3V)
- Output Switch Voltage (D1, D2).....+12V

With Respect to ISO COM_
- Control Input Voltage (ISO DE_)....-0.3V to (ISO $V_{CC_}$ + 0.3V)
- Driver Input Voltage (ISO DI_) .....-0.3V to (ISO $V_{CC_}$ + 0.3V)
- Receiver Output Voltage (ISO RO_) ..-0.3V to (ISO $V_{CC_}$ + 0.3V)
- Driver Output Voltage (A, B, Y, Z) .....-8V to +12.5V
- Receiver Input Voltage (A, B).....-8V to +12.5V

LED Forward Current (DI, DE, ISO RO LED) 50mA

Continuous Power Dissipation (T_A = +70°C)
- 24-Pin Plastic DIP (derate 8.7mW°C above +70°C) 696mW
- 28-Pin Plastic DIP (derate 9.09mW/°C above +70°C) .727mW

Operating Temperature Ranges
- MAX1480E_CPI/MAX1490E_CPI .....0°C to +70°C
- MAX1480E_EPI/MAX1490E_EPI .....-40°C to +85°C

Storage Temperature Range .....-65°C to +150°C

Lead Temperature (soldering, 10s) .....+300°C

Stresses beyond those listed under "Absolute Maximum Ratings" may cause permanent damage to the device. These are stress ratings only, and functional operation of the device at these or any other conditions beyond those indicated in the operational sections of the specifications is not implied. Exposure to absolute maximum rating conditions for extended periods may affect device reliability.

ELECTRICAL CHARACTERISTICS

($V_{CC_}$ = +5V ±10%, V_{FS} = $V_{CC_}$, T_A = T_{MIN} to T_{MAX}, unless otherwise noted. Typical values are at $V_{CC_}$ = +5V and T_A = +25°C.) (Notes 1, 2)

PARAMETER	SYMBOL	CONDITIONS		MIN	TYP	MAX	UNITS
Switch Frequency	f_{SWL}	V_{FS} = 0			535		kHz
	f_{SWH}	FS = $V_{CC_}$ or open			725		
Operating Supply Current	I_{CC}	MAX1480EA, DE´ = $V_{CC_}$ or open	R_L = ∞		85	120	mA
			R_L = 54Ω		145		
		MAX1480EC, DE´ = $V_{CC_}$ or open	R_L = ∞		55	120	
			R_L = 54Ω		120		
		MAX1490EA	R_L = ∞		130	180	
			R_L = 54Ω		180		
		MAX1490EB	R_L = ∞		65	125	
			R_L = 54Ω		130		
Shutdown Supply Current (Note 3)	I_{SHDN}	SD = $V_{CC_}$			0.2		µA
Shutdown Input Threshold	V_{SDH}	High		2.4			V
	V_{SDL}	Low				0.8	
Shutdown Input Leakage Current					10		pA
FS Input Threshold	V_{FSH}	High		2.4			V
	V_{FSL}	Low				0.8	
FS Input Pullup Current		FS low				50	µA
FS Input Leakage Current		FS high			10		pA
Input High Voltage	V_{IH}	DE´, DI´, Figures 1 and 2		V_{CC} - 0.4			V
Input Low Voltage	V_{IL}	DE´, DI´, Figures 1 and 2				0.4	V
Isolation Voltage	V_{ISO}	T_A = +25°C, 1min (Note 4)		1260			V_{RMS}
Isolation Resistance	R_{ISO}	T_A = +25°C, V_{ISO} = 50VDC		100	10,000		MΩ
Isolation Capacitance	C_{ISO}	T_A = +25°C, f = 1MHz			10		pF
Differential Driver Output (No Load)	V_{OD1}					8	V
Differential Driver Output (with Load)	V_{OD2}	R = 50Ω (RS-422)		2			V
		R = 27Ω (RS-485), Figure 4		1.5		5	

ELECTRICAL CHARACTERISTICS (continued)

($V_{CC_}$ = +5V ±10%, V_{FS} = $V_{CC_}$, T_A = T_{MIN} to T_{MAX}, unless otherwise noted. Typical values are at $V_{CC_}$ = +5V and T_A = +25°C.) (Notes 1, 2)

PARAMETER	SYMBOL	CONDITIONS			MIN	TYP	MAX	UNITS
Change in Magnitude of Driver Output Voltage for Complementary Output States	ΔV_{OD}	R = 27Ω or 50Ω, Figure 4		Differential			0.3	V
				Common mode			0.3	
Driver Common-Mode Output	V_{OC}	R = 27Ω or 50Ω, Figure 4					4	V
Input Current (A, B)	ISO I_{IN}	DE´ = 0, $V_{CC_}$ = 0 or +5.5V	V_{IN} = +12V	MAX1490EA/ MAX1490EB			1.0	mA
				MAX1480EA/ MAX1480EC			0.25	
			V_{IN} = -7V	MAX1490EA/ MAX1490EB			0.8	
				MAX1480EA/ MAX1480EC			0.2	
Receiver Input Resistance	R_{IN}	-7V ≤ V_{CM} ≤ +12V		(MAX1480E_)	48			kΩ
				(MAX1490E_)	12			
Receiver Differential Threshold	V_{TH}	-7V ≤ V_{CM} ≤ +12V			-0.2		0.2	V
Receiver Input Hysteresis	ΔV_{TH}	V_{CM} = 0				70		mV
Receiver Output Low Voltage	V_{OL}	Using resistor values listed in Tables 1 and 2					0.4	V
Receiver Output High Current	I_{OH}	V_{OUT} = 5.5V					250	µA
Driver Short-Circuit Current	ISO I_{OSD}	-7V ≤ V_O ≤ 12V (Note 5)				100		mA
ESD Protection	ISO I_{OSD}	A, B, Y, and Z pins, tested using Human Body Model, Figures 1 and 2				±15		kV

SWITCHING CHARACTERISTICS—MAX1480EA/MAX1490EA

($V_{CC_}$ = +5V ±10%, V_{FS} = $V_{CC_}$, T_A = T_{MIN} to T_{MAX}, unless otherwise noted. Typical values are at $V_{CC_}$ = +5V and T_A = +25°C.)

PARAMETER	SYMBOL	CONDITIONS	MIN	TYP	MAX	UNITS
Driver Input to Output Propagation Delay	t_{PLH}	Figures 5 and 7, R_{DIFF} = 54Ω, C_{L1} = C_{L2} = 100pF		90	275	ns
	t_{PHL}			60	275	
Driver Output Skew	t_{SKEW}	Figures 5 and 7, R_{DIFF} = 54Ω, C_{L1} = C_{L2} = 100pF		30	100	ns
Driver Rise or Fall Time	t_R, t_F	Figures 5 and 7, R_{DIFF} = 54Ω, C_{L1} = C_{L2} = 100pF		15	50	ns
Driver Enable to Output High (MAX1480EA Only)	t_{ZH}	Figures 6 and 8, C_L = 100pF, S2 closed		1.0	1.8	µs
Driver Enable to Output Low (MAX1480EA Only)	t_{ZL}	Figures 6 and 8, C_L = 100pF, S1 closed		1.0	1.8	µs
Driver Disable Time from Low (MAX1480EA Only)	t_{LZ}	Figures 6 and 8, C_L = 15pF, S1 closed		0.5	1.8	µs
Driver Disable Time from High (MAX1480EA Only)	t_{HZ}	Figures 6 and 8, C_L = 15pF, S2 closed		0.5	1.8	µs
Receiver Input to Output Propagation Delay	t_{PLH}	Figures 5 and 10, R_{DIFF} = 54Ω, C_{L1} = C_{L2} = 100pF		120	225	ns
	t_{PHL}			90	225	

±15kV ESD-Protected, Isolated RS-485/RS-422 Data Interfaces

SWITCHING CHARACTERISTICS—MAX1480EA/MAX1490EA (continued)

($V_{CC_}$ = +5V ±10%, V_{FS} = $V_{CC_}$, T_A = T_{MIN} to T_{MAX}, unless otherwise noted. Typical values are at $V_{CC_}$ = +5V and T_A = +25°C.)

PARAMETER	SYMBOL	CONDITIONS	MIN	TYP	MAX	UNITS
$\lvert t_{PLH} - t_{PHL} \rvert$ Differential Receiver Skew	t_{SKD}	Figures 5 and 10, R_{DIFF} = 54Ω, C_{L1} = C_{L2} = 100pF		30	150	ns
Maximum Data Rate	f_{MAX}	t_{SKEW}, t_{SKD}, t_{PHL} ≤ 25% of data period	2.5			Mbps
Time to Shutdown	t_{SHDN}			100		µs
Shutdown to Driver Output High	$t_{ZH(SHDN)}$	Figures 6 and 9, C_L = 100pF, S2 closed		3	15	µs
Shutdown to Driver Output Low	$t_{ZH(SHDN)}$	Figures 6 and 9, C_L = 100pF, S1 closed		3	15	µs

SWITCHING CHARACTERISTICS—MAX1480EC/MAX1490EB

($V_{CC_}$ = +5V ±10%, V_{FS} = $V_{CC_}$, T_A = T_{MIN} to T_{MAX}, unless otherwise noted. Typical values are at $V_{CC_}$ = +5V and T_A = +25°C.)

PARAMETER	SYMBOL	CONDITIONS	MIN	TYP	MAX	UNITS
Driver Input to Output Propagation Delay	t_{PLH}	Figures 5 and 7, R_{DIFF} = 54Ω, C_{L1} = C_{L2} = 100pF		1.4	3.0	µs
	t_{PHL}	Figures 5 and 7, R_{DIFF} = 54Ω, C_{L1} = C_{L2} = 100pF		1.1	3.0	
Driver Output Skew	t_{SKEW}	Figures 5 and 7, R_{DIFF} = 54Ω, C_{L1} = C_{L2} = 100pF		300	1200	ns
Driver Rise or Fall Time	t_R, t_F	Figures 5 and 7, R_{DIFF} = 54Ω, C_{L1} = C_{L2} = 100pF		1.0	2.0	µs
Driver Enable to Output High (MAX1480EC Only)	t_{ZH}	Figures 6 and 8, C_L = 100pF, S2 closed		1.4	4.5	µs
Driver Enable to Output Low (MAX1480EC Only)	t_{ZL}	Figures 6 and 8, C_L = 100pF, S1 closed		1.4	4.5	µs
Driver Disable Time from Low (MAX1480EC Only)	t_{LZ}	Figures 6 and 8, C_L = 15pF, S1 closed		2.0	4.5	µs
Driver Disable Time from High (MAX1480EC Only)	t_{HZ}	Figures 6 and 8, C_L = 15pF, S2 closed		1.7	4.5	µs
Receiver Input to Output Propagation Delay	t_{PLH}	Figures 5 and 10, R_{DIFF} = 54Ω, C_{L1} = C_{L2} = 100pF		0.9	3.0	µs
	t_{PHL}			1.1	3.0	
$\lvert t_{PLH} - t_{PHL} \rvert$ Differential Receiver Skew	t_{SKD}	Figures 5 and 10, R_{DIFF} = 54Ω, C_{L1} = C_{L2} = 100pF		200		ns
Maximum Data Rate	f_{MAX}	t_{SKEW}, t_{SKD} ≤ 25% of data period	160			kbps
Time to Shutdown	t_{SHDN}			100		µs
Shutdown to Driver Output High	$t_{ZH(SHDN)}$	Figures 6 and 9, C_L = 100pF, S2 closed		3	15	µs
Shutdown to Driver Output Low	$t_{ZL(SHDN)}$	Figures 6 and 9, C_L = 100pF, S1 closed		3	15	µs

Note 1: All currents into device pins are positive; all currents out of device pins are negative. All voltages are referenced to logic-side ground (GND_), unless otherwise specified.

Note 2: For DE´ and DI´ pin descriptions, see *Detailed Block Diagram and Typical Application Circuit* (Figure 1 for MAX1480EA/MAX1480EC, Figure 2 for MAX1490EA/MAX1490EB).

Note 3: Shutdown supply current is the current at V_{CC1} and V_{CC2} when shutdown is enabled.

Note 4: Limit guaranteed by applying 1520V_{RMS} for 1s. Test voltage is applied between all pins on one side of the package to all pins on the other side of the package, e.g., between pins 1–14 and pins 15–28 on the 28-pin package.

Note 5: Applies to peak current (see *Typical Operating Characteristics*). Although the MAX1480EA/MAX1480EC and MAX1490EA/MAX1490EB provide electrical isolation between logic ground and signal paths, they do not provide isolation between external shields and the signal paths (see *Isolated Common Connection* section).

Typical Operating Characteristics

($V_{CC_}$ = +5V, V_{FS} = $V_{CC_}$, Figures 1 and 2, T_A = +25°C, unless otherwise noted.)

OUTPUT CURRENT vs. RECEIVER OUTPUT LOW VOLTAGE

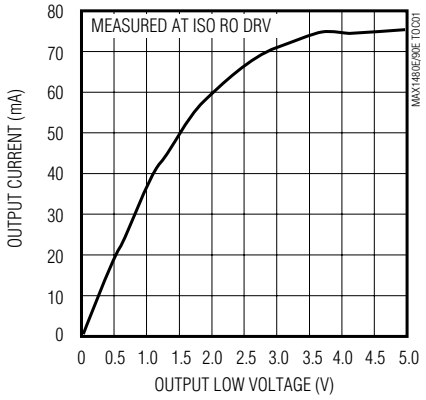

OUTPUT CURRENT vs. RECEIVER OUTPUT HIGH VOLTAGE

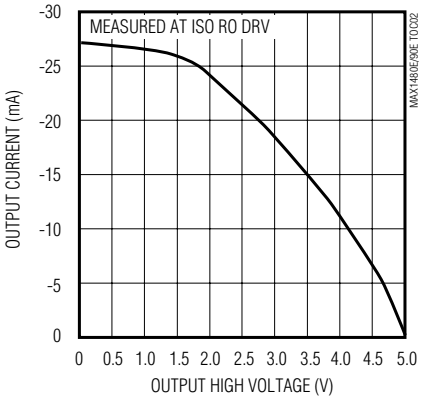

RECEIVER OUTPUT HIGH VOLTAGE vs. TEMPERATURE

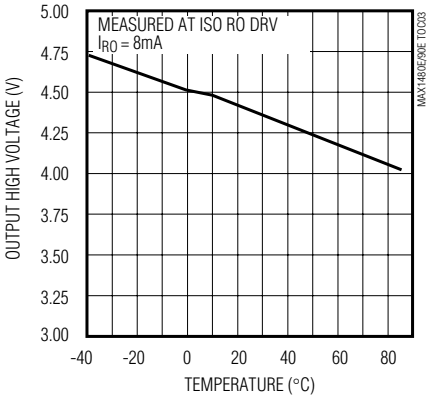

RECEIVER OUTPUT LOW VOLTAGE vs. TEMPERATURE

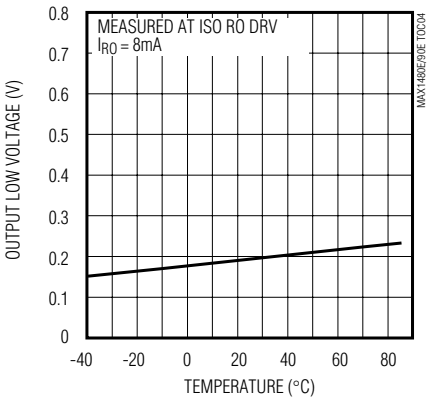

OUTPUT CURRENT vs. DRIVER OUTPUT LOW VOLTAGE

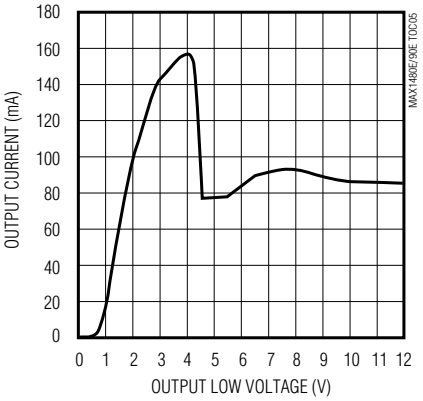

OUTPUT CURRENT vs. DRIVER OUTPUT HIGH VOLTAGE

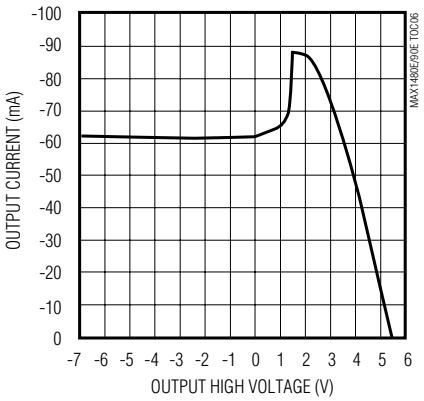

DRIVER OUTPUT CURRENT vs. DIFFERENTIAL OUTPUT VOLTAGE

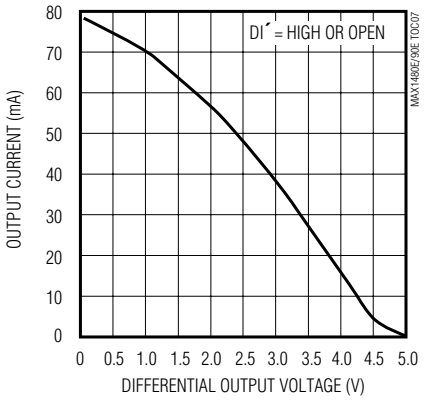

DRIVER DIFFERENTIAL OUTPUT VOLTAGE vs. TEMPERATURE

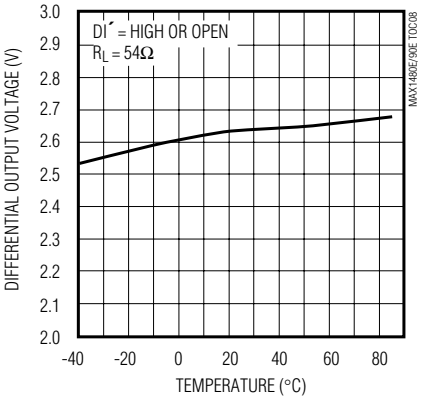

SHUTDOWN CURRENT vs. TEMPERATURE

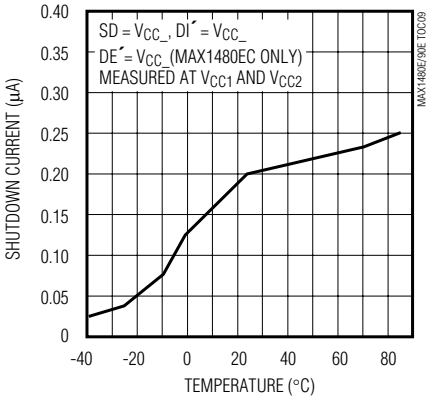

±15kV ESD-Protected, Isolated RS-485/RS-422 Data Interfaces

Typical Operating Characteristics (continued)

($V_{CC_}$ = +5V, V_{FS} = $V_{CC_}$, Figures 1 and 2, T_A = +25°C, unless otherwise noted.)

MAX1480EA
SUPPLY CURRENT vs. TEMPERATURE

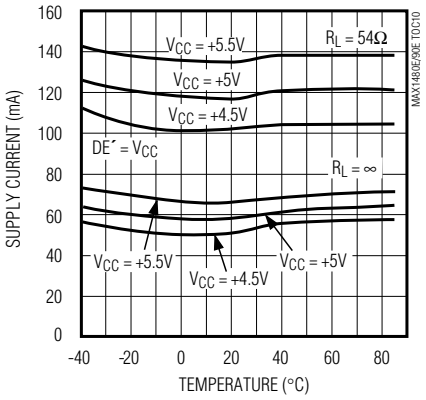

MAX1480EC
SUPPLY CURRENT vs. TEMPERATURE

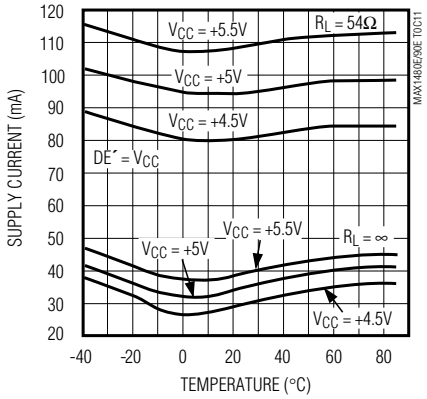

MAX1490EA
SUPPLY CURRENT vs. TEMPERATURE

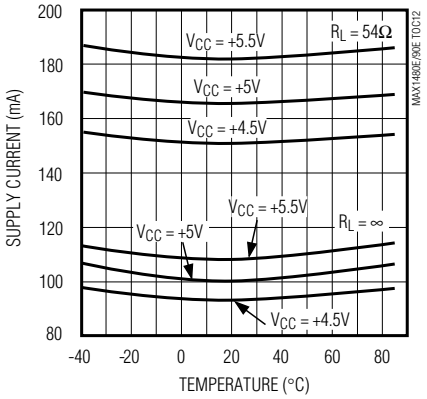

MAX1490EB
SUPPLY CURRENT vs. TEMPERATURE

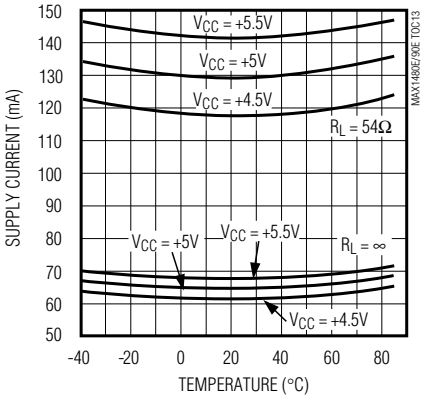

MAX1480EA/MAX1490EA
RECEIVER t_{PHL}

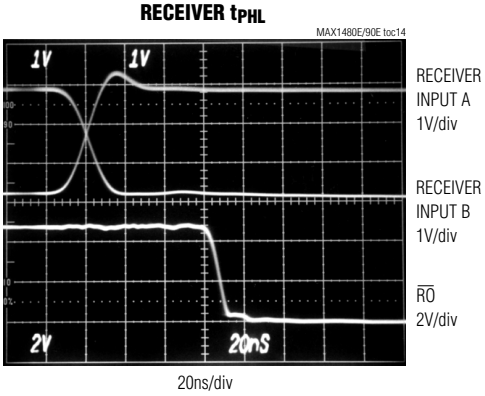

MAX1480EA/MAX1490EA
RECEIVER t_{PLH}

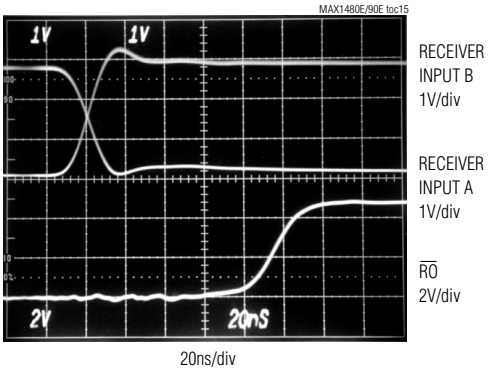

Typical Operating Characteristics (continued)

($V_{CC_}$ = +5V, V_{FS} = $V_{CC_}$, $V_{DI'}$ = 0, DE´ toggled 0 to 5V at 5kHz, Figures 1 and 2, T_A = +25°C, unless otherwise noted.)

MAX1480EC/MAX1490EB RECEIVER t_{PHL}

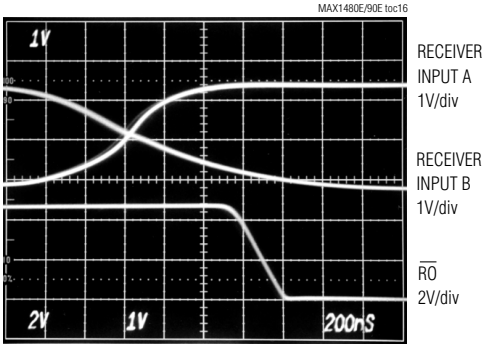

200ns/div

MAX1480EC/MAX1490EB RECEIVER t_{PLH}

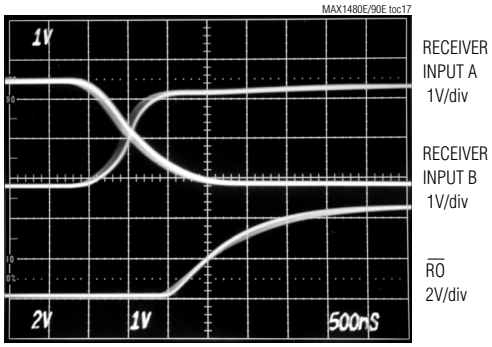

500ns/div

MAX1480EC DRIVER ENABLE TIME

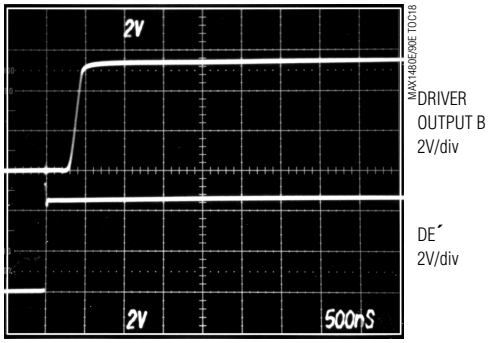

500ns/div

MAX1480EC DRIVER DISABLE TIME

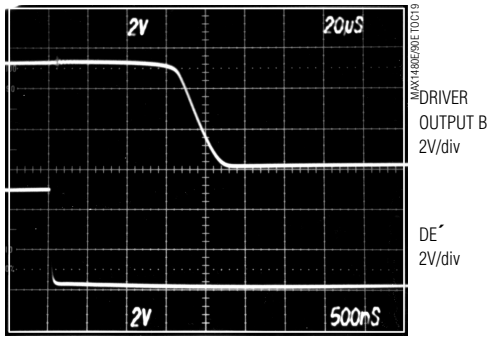

500ns/div

MAX1480EA/MAX1490EA POWER-UP DELAY TO DRIVER OUTPUTS VALID

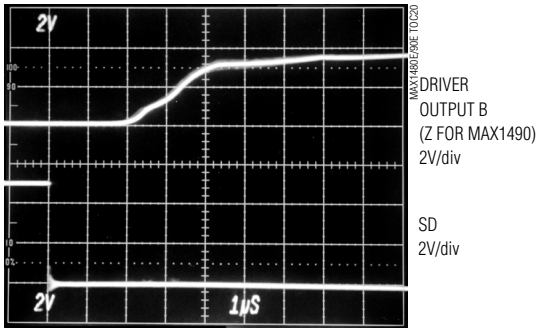

1µs/div

$V_{DI'}$ = 0
V_{SD} = 5V TO 0 AT 1kHz

Pin Description

PIN		NAME	FUNCTION
MAX1480EA/ MAX1480EC	MAX1490EA/ MAX1490EB		
1, 2, 8, 10	1, 2, 8, 10	V_{CC1}–V_{CC4}	Logic-Side (Nonisolated Side) +5V Supply Voltages
3, 4	3, 4	D1, D2	Internal Connections. Leave these pins unconnected.
5	5	GND1	Logic-Side Ground. Connect to GND2 (pin 12).
6	6	FS	Frequency Select Input. If FS = $V_{CC_}$ or is open, switch frequency is high; if FS = GND, switch frequency is low. For optimal performance and minimal supply current, connect FS to $V_{CC_}$ or leave unconnected.
7	7	SD	Shutdown Input. Ground for normal operation. When high, the power oscillator is disabled.
9	9	DI	Driver Input. With DE´ high (MAX1480EA/MAX1480EC only), a low on DI´ forces output A low and output B high. Similarly, a high on DI´ forces output A high and output B low. Drives internal LED cathode through a resistor (see Table 1 for MAX1480EA/MAX1480EC, Table 2 for MAX1490EA/MAX1490EB).
11	—	DE	Driver-Enable Input. The driver outputs, A and B, are enabled by bringing DE´ high. The driver outputs are high impedance when DE´ is low. If the driver outputs are enabled, the device functions as a line driver. While the driver outputs are high impedance, the device functions as a line receiver. Drives internal LED cathode through a resistor (Table 1).
—	11	RO	Receiver Output. If A > B by 200mV, RO is high; if A < B by 200mV, RO is low. Open collector; must have pullup to V_{CC} (Table 2).
12	12	GND2	Logic-Side Ground. Connect to GND1 (pin 5).
13	—	$\overline{RO}$	Receiver Output. If A > B by 200mV, $\overline{RO}$ is low; if A < B by 200mV, $\overline{RO}$ is high. Open collector; must have pullup to V_{CC} (Table 1).
14	—	V_{CC5}	Logic-Side (Nonisolated Side) +5V Supply Voltage
15	13	ISO RO LED	Isolated Receiver Output LED. Internal LED anode in MAX1480EA/MAX1480EC and LED cathode in MAX1490EA/MAX1490EB. Connect to ISO RO DRV through a resistor (Table 1 for MAX1480EA/MAX1480EC; Table 2 for MAX1490EA/MAX1490EB).
16	—	ISO COM2	Isolated Common. Connect to ISO COM1 (pin 20).
17	—	ISO DE DRV	Isolated Driver-Enable Drive. The driver outputs, A and B, are enabled by bringing DE´ high. The driver outputs are high impedance when DE´ is low. If the driver outputs are enabled, the device functions as a line driver. While the driver outputs are high impedance, the device functions as a line receiver. Open-collector output; must have pullup to ISO VCC_ and be connected to ISO DE IN for normal operation (Table 1).
18	14	ISO V_{CC2}	Isolated Supply Voltage. Connect to ISO V_{CC1} (pin 26 for MAX1480EA/ MAX1480EC, or pin 22 for MAX1490EA/MAX1490EB).
19	15	ISO DI DRV	Isolated Driver-Input Drive. With DE´ high (MAX1480EA/MAX1480EC only), a low on DI´ forces output A low and output B high. Similarly, a high on DI´ forces output A high and output B low. Connect to ISO DI IN (on the MAX1480EA/MAX1480EC only) for normal operation. Open-collector output; connect a pullup resistor to ISO $V_{CC_}$ (Table 1 for MAX1480EA/MAX1480EC, Table 2 for MAX1490EA/MAX1490EB).
20	16	ISO COM1	Isolated Common. For MAX1480EA/MAX1480EC, connect to ISO COM2 (pin 16) (Figures 1 and 2).

Pin Description (continued)

PIN		NAME	FUNCTION
MAX1480EA/ MAX1480EC	MAX1490EA/ MAX1490EB		
—	17	Y	Noninverting Driver Output
—	18	Z	Inverting Driver Output
—	19	B	Inverting Receiver Input
—	20	A	Noninverting Receiver Input
21	—	ISO DE IN	Isolated Driver-Enable Input. Connect to ISO DE DRV for normal operation.
22	—	ISO DI IN	Isolated Driver Input. Connect to ISO DI DRV for normal operation.
23	—	A	Noninverting Driver Output and Noninverting Receiver Input
24	21	ISO RO DRV	Isolated Receiver-Output Drive. Connect to ISO RO LED through a resistor (see Table 1 for MAX1480EA/MAX1480EC, Table 2 for MAX1490EA/MAX1490EB).
25	—	B	Inverting Driver Output and Inverting Receiver Input
26	22	ISO V_{CC1}	Isolated Supply Voltage Source
27, 28	23, 24	AC2, AC1	Internal Connections. Leave these pins unconnected.

Note: *For DE´ and DI´ pin descriptions, see Detailed Block Diagram and Typical Application Circuit (Figure 1 for MAX1480EA/MAX1480EC, Figure 2 for MAX1490EA/MAX1490EB).*

Detailed Description

The MAX1480EA/MAX1480EC/MAX1490EA/MAX1490EB are complete, electrically isolated, RS-485/RS-422 data-communications interface solutions. Transceivers, optocouplers, a power driver, and a transformer in one standard 28-pin DIP package (24-pin package for the MAX1490EA/MAX1490EB) provide a complete interface. Signals and power are internally transported across the isolation barrier (Figures 1, 2). Power is transferred from the logic side (nonisolated side) to the isolated side of the barrier through a center-tapped transformer. Signals cross the barrier through high-speed optocouplers. A single +5V supply on the logic side powers both sides of the interface. The MAX1480EA/MAX1480EC offer half-duplex communications while the MAX1490EA/MAX1490EB feature full-duplex communication. The functional input/output relationships are shown in Tables 3 through 6.

The MAX1480EC/MAX1490EB feature reduced-slew-rate drivers that minimize EMI and reduce reflections caused by improperly terminated cables, allowing error-free transmission at data rates up to 160kbps. The MAX1480EA/MAX1490EA driver slew rate is not limited, allowing transmission rates up to 2.5Mbps.

The MAX1480EC/MAX1490EB shutdown feature reduces supply current to as low as 0.2µA by using the SD pin (see *Low-Power Shutdown Mode* section).

Drivers are short-circuit current limited and are protected against excessive power dissipation by thermal shutdown circuitry that puts the driver outputs into a high-impedance state. The receiver input has a fail-safe feature that guarantees a logic-high RO (logic-low $\overline{RO}$) output if the input is open circuit.

On the MAX1480EA/MAX1480EC, the driver outputs are enabled by bringing DE´ high. Driver-enable time is typically 1.0µs. Allow time for the devices to be enabled before sending data (see *Typical Operating Characteristics*). When enabled, driver outputs function as line drivers. Driver outputs are high impedance when DE´ is low. When outputs are high impedance, they function as line receivers.

The MAX1480EA/MAX1480EC/MAX1490EA/MAX1490EB withstand $1260V_{RMS}$ (1min) or $1520V_{RMS}$ (1s). The logic inputs can be driven from TTL/CMOS logic with a series resistor, and the received data output can directly drive TTL or CMOS-logic families with only a resistive pullup.

Low-Power Shutdown Mode

The SD pin shuts down the oscillator on the internal power driver. With the primary side in shutdown, no power is transferred across the isolation barrier. The DI and DE optocouplers, however, still consume current if the drive signals on the nonsolated side are low. Therefore, leave DI´ and DE´ high or floating when in shutdown mode. Under these conditions, the MAX1480EC/MAX1490EB supply current is reduced to as low as 0.2µA.

±15kV ESD-Protected, Isolated RS-485/RS-422 Data Interfaces

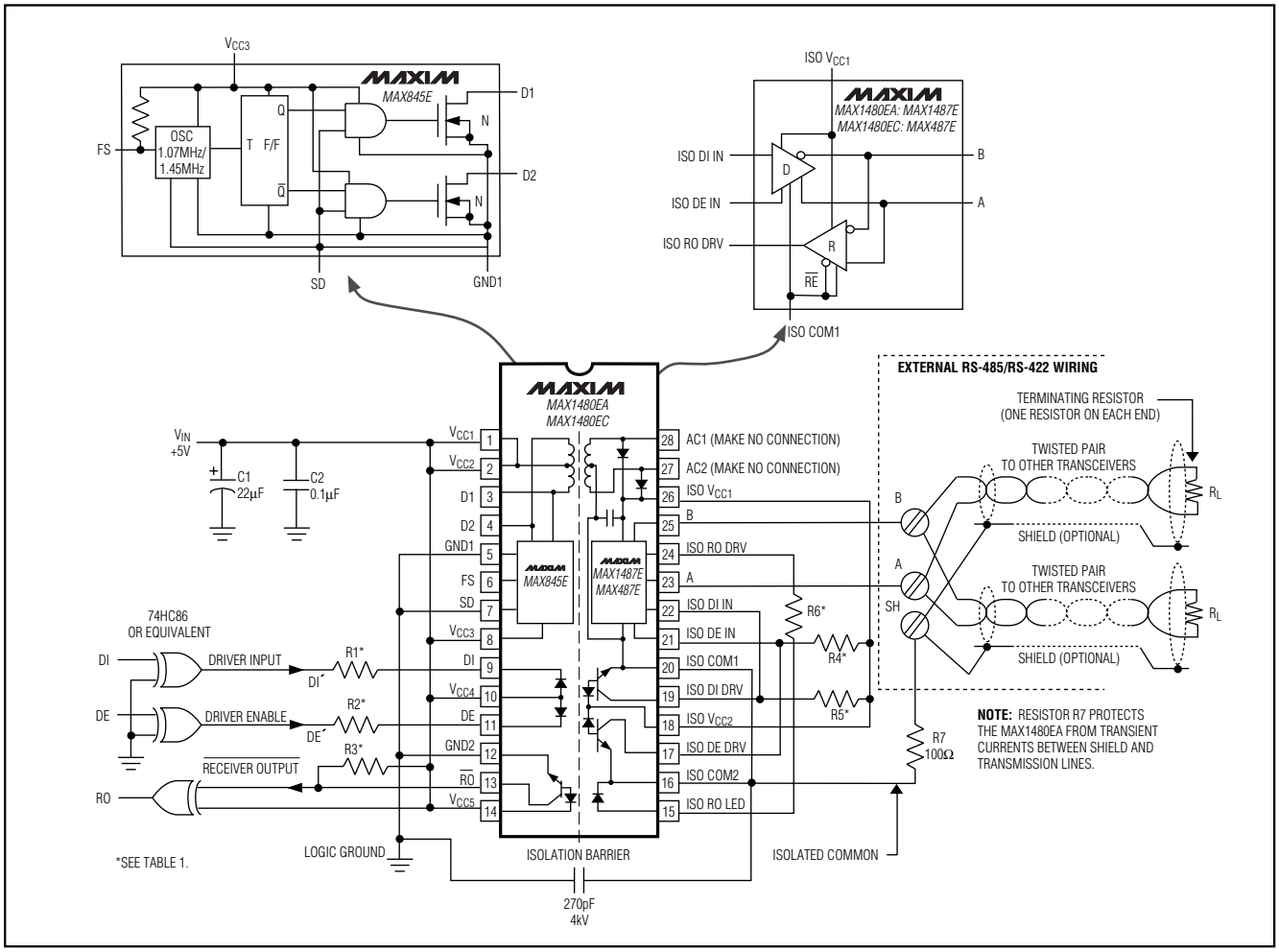

Figure 1. MAX1480EA/MAX1480EC Detailed Block Diagram and Application Circuit

Table 1. Pullup and LED Drive Resistors for Figure 1

PART	R1 (Ω)	R2 (Ω)	R3 (Ω)	R4 (Ω)	R5 (Ω)	R6 (Ω)
MAX1480EA	200	200	1000	4300	1000	200
MAX1480EC	200	200	3000	3000	3000	200

The high-speed optocouplers on the MAX1480EA/MAX1480EC/MAX1490EA consume an additional 10mA through V_{CC5} (V_{CC4} for the MAX1490EA). Therefore, to completely shut down these devices, use an external P-channel MOSFET as shown in Figure 3. In normal operation, SD is low, turning the MOSFET on and thereby providing power to all the V_{CC} pins. When SD is pulled high, the power oscillator is disabled and the switch is turned off, disconnecting power from the DI and DE optocouplers. In normal operating mode, the switch carries only the optocoupler currents, so an on-resistance of several ohms does not significantly degrade efficiency.

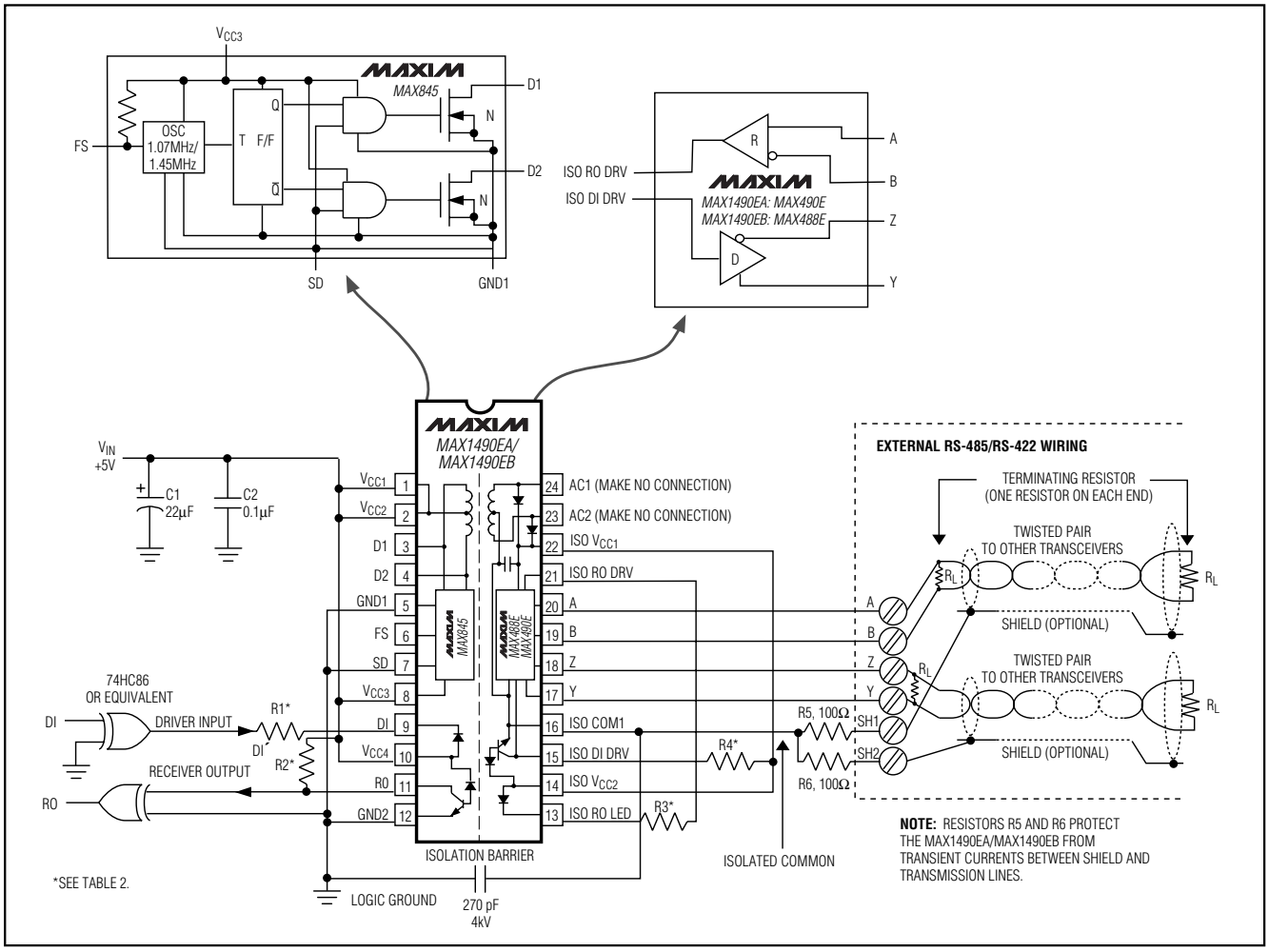

Figure 2. MAX1490EA/MAX1490EB Detailed Block Diagram and Typical Application Circuit

Table 2. Pullup and LED Drive Resistors for Figure 2

PART	R1 (Ω)	R2 (Ω)	R3 (Ω)	R4 (Ω)
MAX1490EA	200	1000	330	1000
MAX1490EB	200	3000	330	3000

MAX1480EC/MAX1490EB: Reduced EMI and Reflections

The MAX1480EC/MAX1490EB are slew-rate-limited, minimizing EMI and reducing reflections caused by improperly terminated cables. Figure 11 shows both the driver output waveform of a MAX1480EA/MAX1490EA transmitting a 150kHz signal and the Fourier analysis of that waveform. High-frequency harmonics with large amplitudes are evident. Figure 12 shows the same information for the slew-rate-limited MAX1480EC/MAX1490EB transmitting the same signal. The high-frequency harmonics have much lower amplitudes, and therefore the potential for EMI is significantly reduced.

Driver Output Protection

There are two mechanisms to prevent excessive output current and power dissipation caused by faults or by bus contention. A foldback current limit on the output stage provides immediate protection against short cir-

±15kV ESD-Protected, Isolated RS-485/RS-422 Data Interfaces

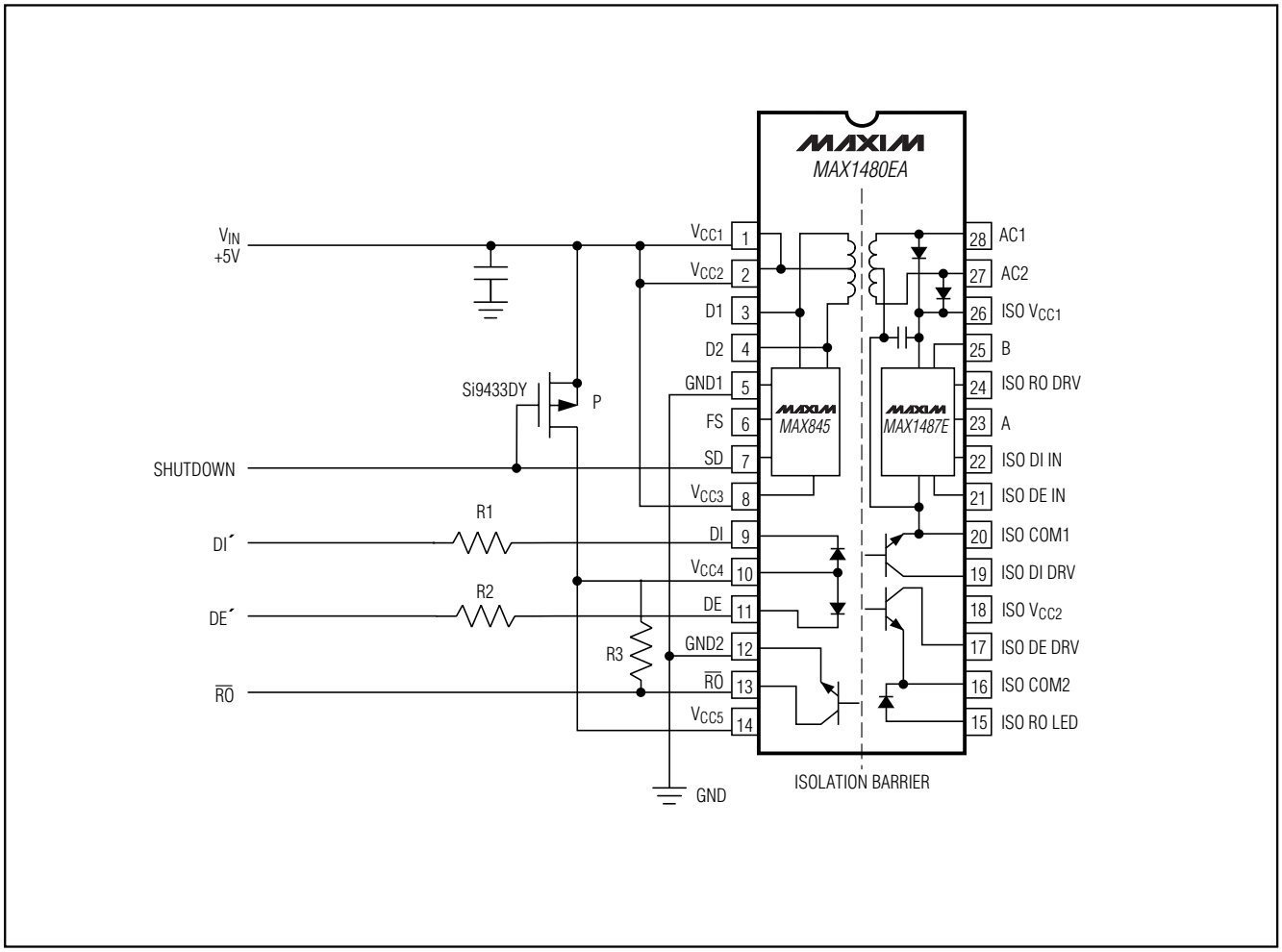

Figure 3. MAX1480EA Low-Power Shutdown Mode

Test Circuits

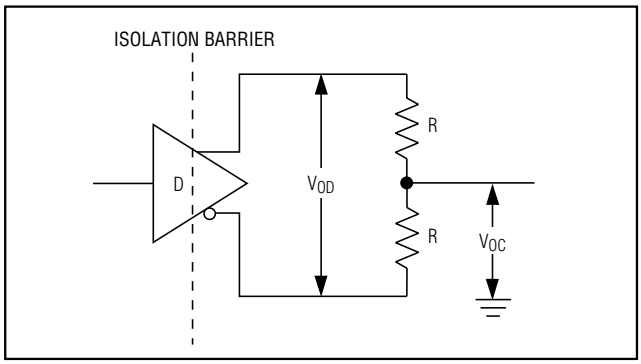

Figure 4. Driver DC Test Load

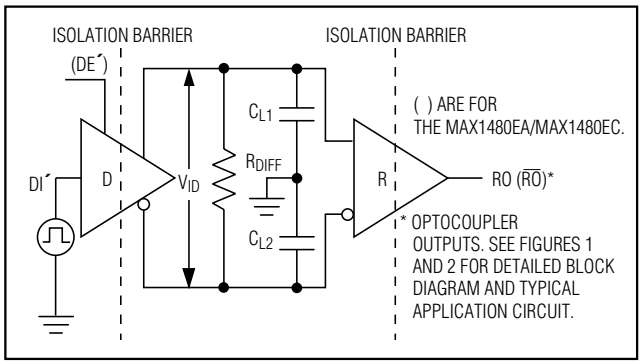

Figure 5. Driver/Receiver Timing Test Circuit

Test Circuits (continued)

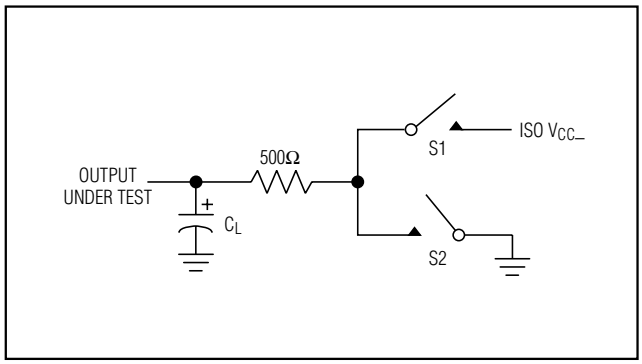

Figure 6. Driver Timing Test Load

Switching Waveforms

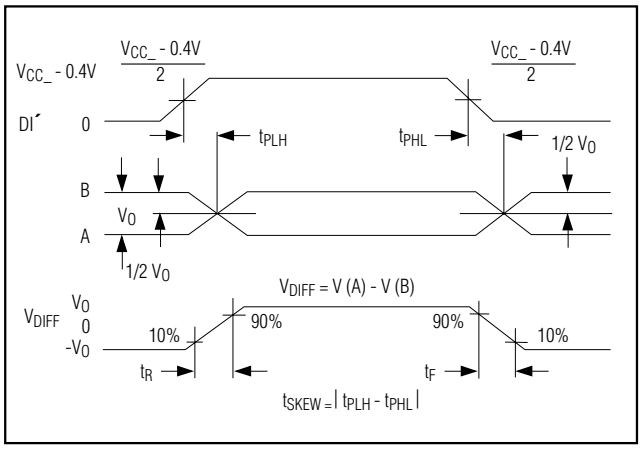

Figure 7. Driver Propagation Delays and Transition Times

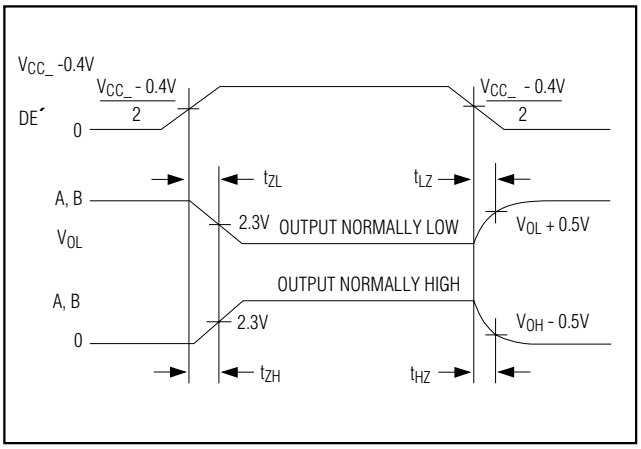

Figure 8. Driver Enable and Disable Times

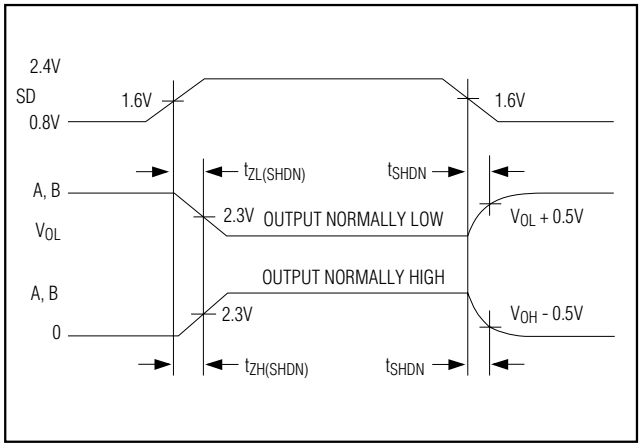

Figure 9. Times to/from Shutdown

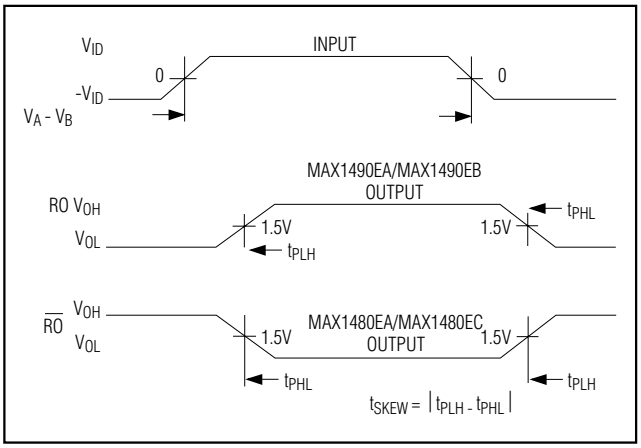

Figure 10. Receiver Propagation Delays

cuits over the entire common-mode range (see *Typical Operating Characteristics*). In addition, a thermal shutdown circuit forces the driver outputs into a high-im pedance state if the die temperature rises excessively.

Propagation Delay Skew

Propagation delay skew is the difference between the low-to-high and high-to-low propagation delay. Small driver/receiver skew times help reduce EMI and reflections by maintaining balanced differential signals.

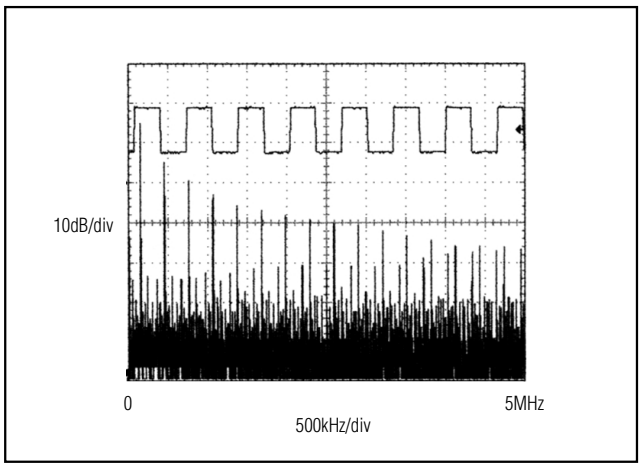

Figure 11. Driver Output Waveform and FFT Plot of MAX1480EA/MAX1490EA Transmitting a 150kHz Signal

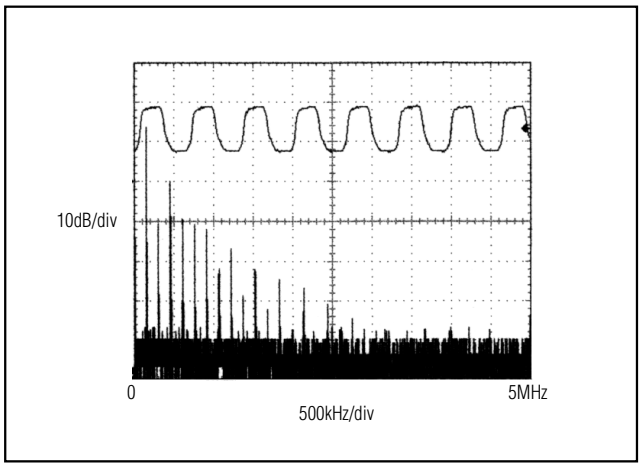

Figure 12. Driver Output Waveform and FFT Plot of MAX1480EC/ MAX1490EB Transmitting a 150kHz Signal

Function Tables

Half-Duplex Devices (MAX1480EA/MAX1480EC)

Table 3. Transmitting

INPUTS*		OUTPUTS	
DE´	DI´	B	A
1	1	0	1
1	0	1	0
0	X	High-Z	High-Z

X = Don't care; High-Z = High impedance

Table 4. Receiving

INPUTS*		OUTPUT (RO)
DE´	V_A - V_B	
0	≥ +0.2V	0
0	≤ -0.2V	1
0	Open	0

Full-Duplex Devices (MAX1490EA/MAX1490EB)

Table 5. Transmitting

INPUT* (DI´)	OUTPUTS	
	Z	Y
1	0	1
0	1	0

** For DE´ and DI´ pin descriptions, see Detailed Block Diagram and Typical Application Circuit (Figure 1 for MAX1480EA/ MAX1480EC, Figure 2 for MAX1490EA/MAX1490EB).*

Table 6. Receiving

INPUT (V_A - V_B)	OUTPUT (RO)
≥ +0.2V	1
≤ -0.2V	0
Open	1

Applications Information

These E versions of the MAX1480EA/MAX1480EC/1490EA/MAX1490EB provide extra protection against ESD. The rugged MAX1480EA/MAX1480EC/MAX1490EA/MAX1490EB are intended for harsh environments where high-speed communication is important. These devices eliminate the need for transient suppressor diodes or the use of discrete protection components. The standard (non-E) MAX1480A/MAX1480C/MAX1490A/MAX1490B are recommended for applications where cost is critical.

±15kV ESD Protection

As with all Maxim devices, ESD-protection structures are incorporated on all pins to protect against electrostatic discharges encountered during handling and assembly. The driver outputs and receiver inputs have extra protection against static electricity. Maxim's engineers developed state-of-the-art structures to protect these pins against ESD of ±15kV without damage. The ESD structures withstand high ESD in all states: normal operation, shutdown, and powered down. After an ESD event, Maxim's MAX1480EA/MAX1480EC/MAX1490EA/MAX1490EB keep working without latchup. An isolation capacitor of 270pF 4kV should be placed between ISO COM and logic ground for optional performance against an ESD pulse with respect to logic ground.

ESD protection can be tested in various ways; the transmitter outputs and receiver inputs of this product family are characterized for protection to ±15kV using the Human Body Model.

ESD Test Conditions

The ±15kV ESD test specifications apply only to the A, B, Y, and Z I/O pins. The test surge may be referenced to either the ISO COM or to the nonisolated GND (Figures 1 and 2).

Human Body Model

Figure 13 shows the Human Body Model, and Figure 14 shows the current waveform it generates when discharged into low impedance. This model consists of a 100pF capacitor charged to the ESD voltage of interest, which is then discharged into the test device through a 1.5kΩ resistor.

Machine Model

The Machine Model for ESD tests all pins using a 200pF storage capacitor and zero discharge resistance. Its objective is to simulate the stress caused by contact that occurs with handling and assembly during manufacturing. All pins require this protection during manufacturing—not just inputs and outputs. Therefore, after PC board assembly, the Machine Model is less relevant to I/O ports.

The MAX1480EA/MAX1480EC are designed for bidirectional data communications on multipoint bus-transmission lines. The MAX1490EA/MAX1490EB are designed for full-duplex bidirectional communications that are primarily point-to-point. Figures 15 and 16 show half-duplex and full-duplex typical network application circuits, respectively. To minimize reflections, terminate the line at both ends with its characteristic impedance, and keep stub lengths off the main line as short as possible. The slew-rate-limited MAX1480EC/MAX1490EB are more tolerant of imperfect termination and stubs off the main line.

Layout Considerations

The MAX1480EA/MAX1480EC/MAX1490EA/MAX1490EB pinouts enable optimal PC board layout by minimizing interconnect lengths and crossovers:

- For maximum isolation, the "isolation barrier" should not be breached except by the MAX1480EA/

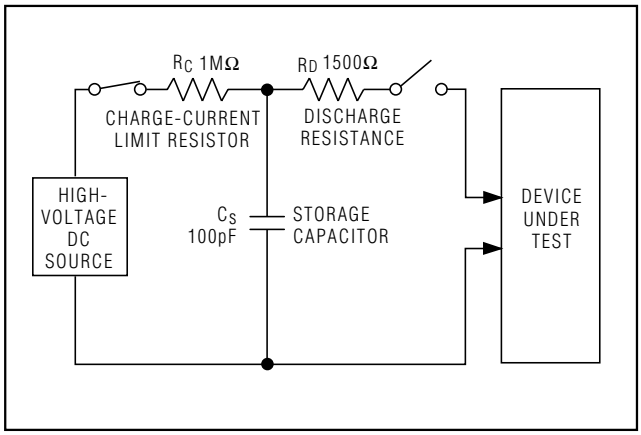

Figure 13. Human Body ESD Test Model

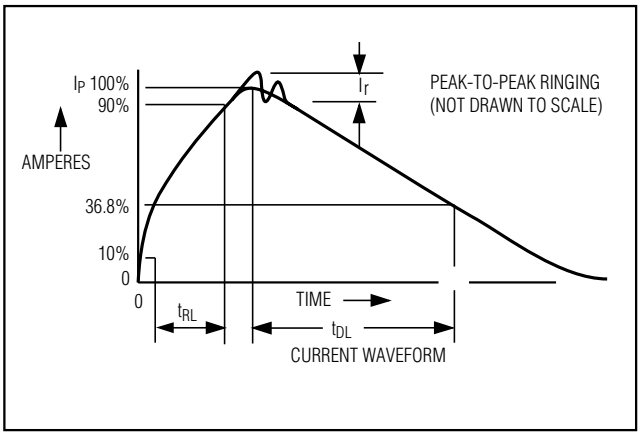

Figure 14. Human Body Current Waveform

±15kV ESD-Protected, Isolated RS-485/RS-422 Data Interfaces

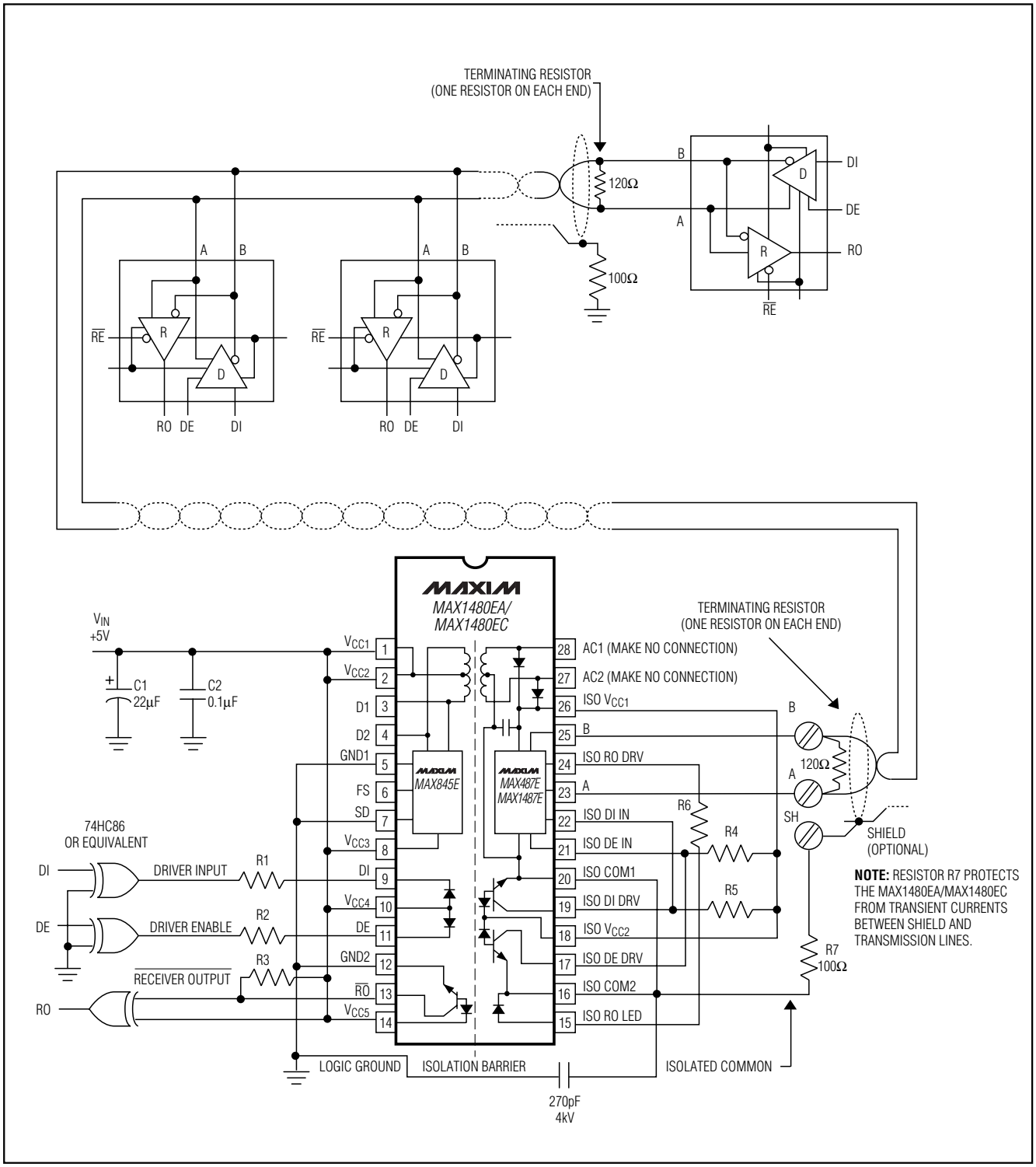

Figure 15. Typical Half-Duplex RS-485/RS-422 Network

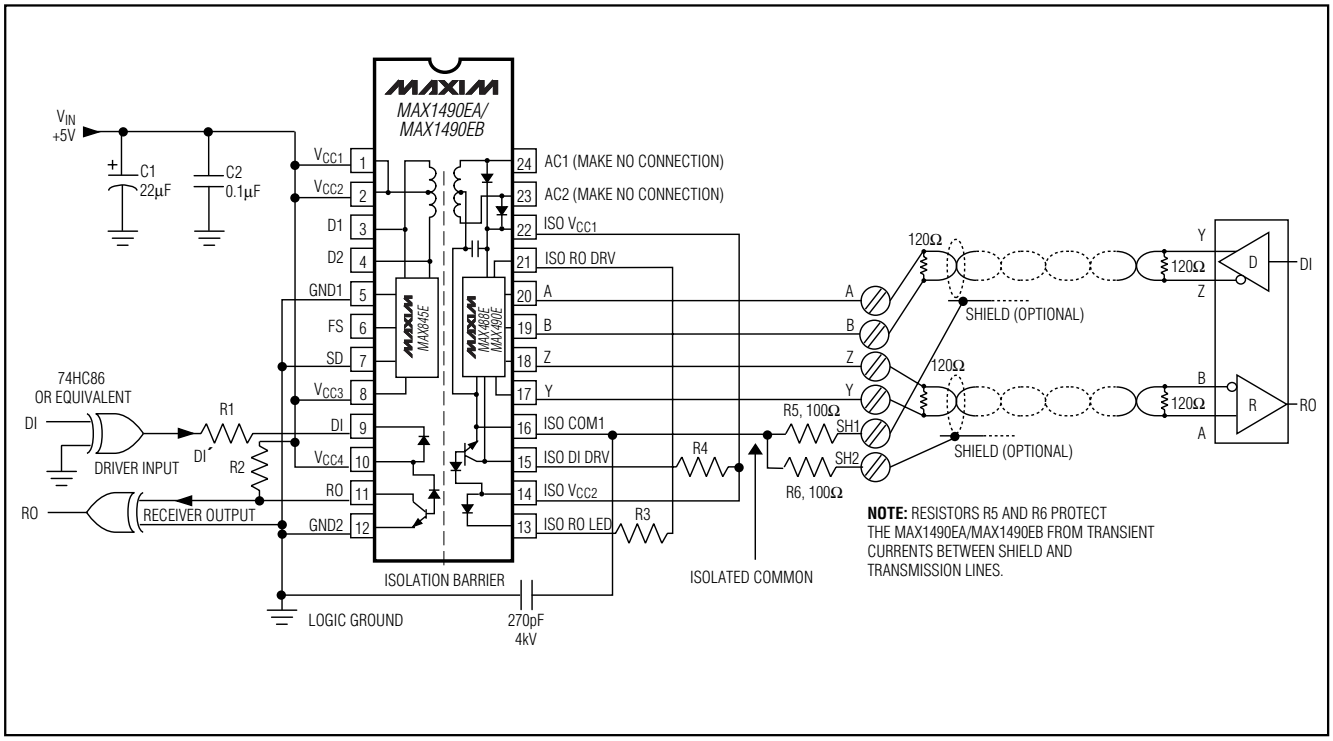

Figure 16. Typical Full-Duplex RS-485/RS-422 Network

MAX1480EC/MAX1490EA/MAX1490EB. Connections and components from one side should not be located near those of the other side.

- A shield trace connected to the ground on each side of the barrier can help intercept capacitive currents that might otherwise couple into the signal path. In a double-sided or multilayer board, these shield traces should be present on all conductor layers.
- Try to maximize the width of the isolation barrier wherever possible; a clear space of at least 0.25 inches between ground and isolated common is suggested.

Pullup and LED Drive Resistors

The MAX1480EA/MAX1480EC/MAX1490EA/MAX1490EB are specified and characterized using the resistor values shown in Tables 1 and 2. Altering the recommended values can degrade performance.

DI and DE are intended to be driven through a series current-limiting resistor. Directly grounding these pins destroys the device.

The DI and DE (MAX1480EA/MAX1480EC only) inputs are the cathodes of LEDs whose anodes are connected to the supply. These points are best driven by a CMOS-logic gate with a series resistor to limit the current. The resistor values shown in Tables 1 and 2 are recommended when the 74HC86 gate or equivalent is used. These values may need to be adjusted if a driving gate with dissimilar series resistance is used.

All pullup resistors are based on optocoupler specifications in order to optimize the devices' data-transfer rates.

Isolated Common Connection

The isolated common may be completely floating with respect to the logic ground and the effective network ground. The receiver input resistors cause the isolated common voltage to go to the mean voltage of the receiver inputs. If using shielded cable, connect the isolated common to the shield through a 100Ω resistor. In the case of the MAX1490EA/MAX1490EB, each shield should have its own 100Ω resistor (Figures 1, 2, 15, and 16).

Double-Isolated RS-485 Repeater

The RS-422/RS-485 standard is specified for cable lengths up to 4000 feet. When approaching or exceeding the specified maximum cable length, a ground-potential difference of several tens of volts can easily develop. This difference can be either DC, AC, at power-line frequency, or any imaginable noise or impulse waveform. It is typically very low impedance so that if a connection between the two grounds is attempted, very large cur-

±15kV ESD-Protected, Isolated RS-485/RS-422 Data Interfaces

rents may flow. These currents are by their nature unstable and unpredictable. In addition, they may cause noise to be injected into sensitive instrumentation and, in severe cases, might actually cause physical damage to such equipment.

Figure 17 shows a half-duplex (2-wire), bidirectional, party-line repeater system that prevents interference and/or damage from ground-potential differences. Two MAX1480EA/MAX1480EC isolated RS-485 transceivers are used to isolate each of the network segments from the electrical environment of the repeater. The MAX1480EA/MAX1480EC also regenerate bus signals that may have been degraded by line attenuation or dispersion.

In the idle state, both transmitters are disabled, while all receivers in the system are enabled. If any device on the system has information for any other device, it starts sending its data onto the bus. Each data transmission on the bus retriggers the one-shot, keeping the sending transmitter enabled until there are no more transmissions. All receivers receive all data; if this is undesirable, the protocol must allow for an address field so receivers can ignore data not directed to them.

Each node must refrain from transmitting when data already exists on the bus, and must resend data that is corrupted by the collisions that inevitably occur with a party-line system. With the repeater of Figure 17, there might be transmitters up to 8000 feet apart. That represents more than 8µs (assuming 1ns/foot of delay) in which two nodes could be transmitting simultaneously.

The circuit in Figure 17 can be used either directly as shown, with the slew-rate-limited MAX1480EC, for data transfer rates up to 160kbps, or with the MAX1480EA for data rates up to 2.5Mbps (see Table 1 for pullup and LED resistor values when using the MAX1480EA). If dual-port isolation is not needed, one of the MAX1480EC devices can be replaced by a MAX487E for 250kbps applications.

Reliability

These products contain transformers, optocouplers, and capacitors, in addition to several monolithic ICs and diodes. As such, the reliability expectations more closely represent those of discrete optocouplers rather than the more robust characteristics of monolithic silicon ICs. The reliability testing programs for these multicomponent devices may be viewed on the Maxim website (www.maxim-ic.com) under Technical Support, Technical Reference, Multichip Products.

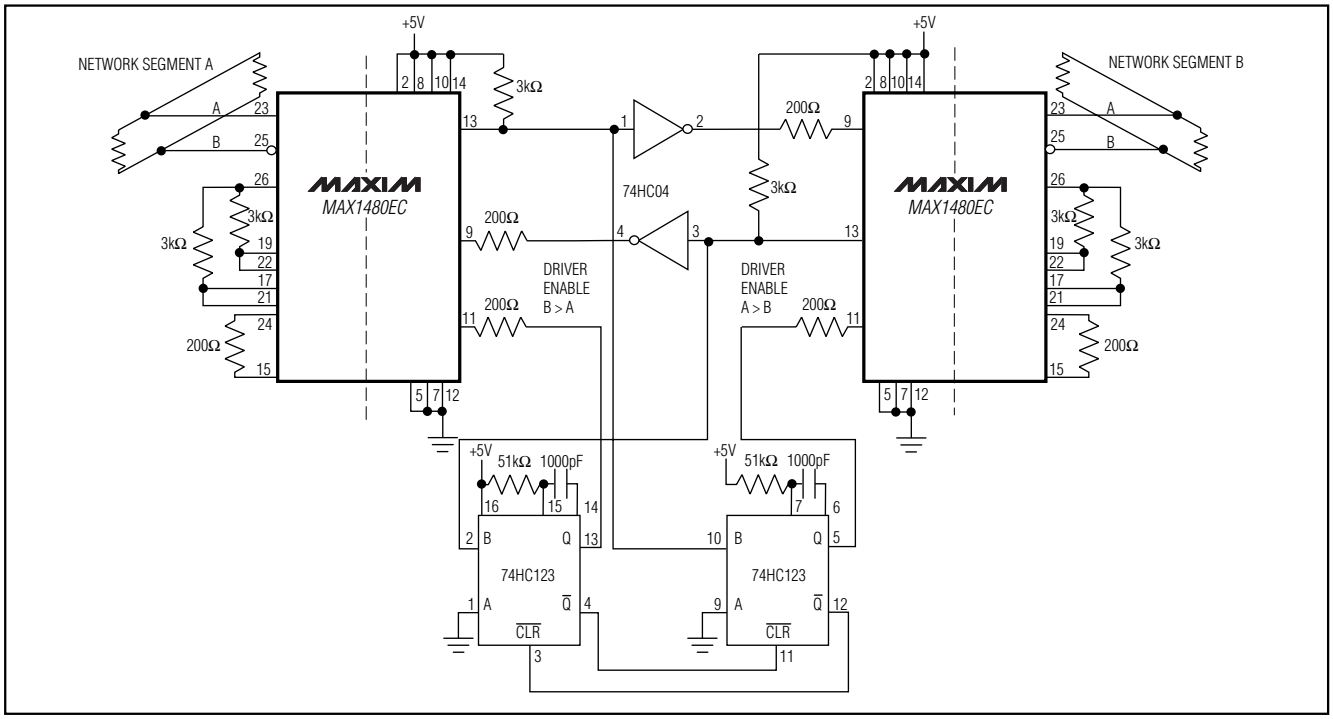

Figure 17. Double-Isolated RS-485 Repeater

Ordering Information (continued)

PART†	TEMP. RANGE	PIN-PACKAGE
MAX1480ECCPI	0°C to +70°C	28 Wide Plastic DIP
MAX1480ECEPI	-40°C to +85°C	28 Wide Plastic DIP
MAX1490EACPG	0°C to +70°C	24 Wide Plastic DIP
MAX1490EAEPG	-40°C to +85°C	24 Wide Plastic DIP
MAX1490EBCPG	0°C to +70°C	24 Wide Plastic DIP
MAX1490EBEPG	-40°C to +85°C	24 Wide Plastic DIP

† *Data rate for A parts is up to 2500kbps. Data rate for C parts is up to 250kbps.*

Selector Guide

PART	HALF/ FULL DUPLEX	DATA RATE (Mbps)	SLEW-RATE LIMITED
MAX1480EA	Half	2.5	No
MAX1480EC	Half	0.25	Yes
MAX1490EA	Full	2.5	No
MAX1490EB	Full	0.25	Yes

This device is constructed using a unique set of packaging techniques that impose a limit on the thermal profile the device can be exposed to during board-level solder attach and rework. Maxim recommends the use of the solder profiles recommended in the industry-standard specification, JEDEC 020A, paragraph 7.6, Table 3 for IR/VPR and Convection Reflow processes. Preheating, per this standard, is required. Hand or wave soldering is not recommended.

Pin Configurations (continued)

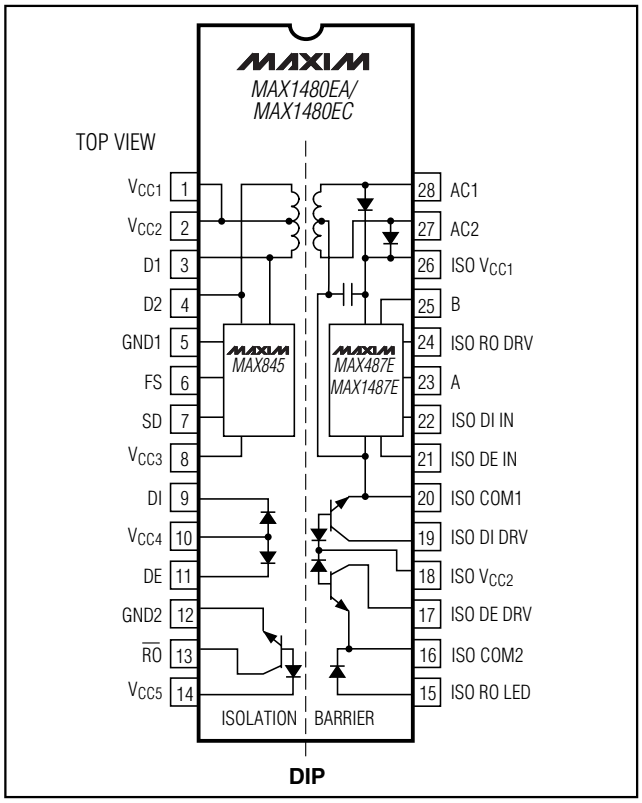

Maxim cannot assume responsibility for use of any circuitry other than circuitry entirely embodied in a Maxim product. No circuit patent licenses are implied. Maxim reserves the right to change the circuitry and specifications without notice at any time.

© 2001 Maxim Integrated Products Printed USA MAXIM is a registered trademark of Maxim Integrated Products.