19-2174; Rev 1; 7/06

Dual 10-Bit, 20Msps, 3V, Low-Power ADC with Internal Reference and Parallel Outputs

General Description

The MAX1184 is a 3V, dual 10-bit analog-to-digital converter (ADC) featuring fully-differential wideband track-and-hold (T/H) inputs, driving two pipelined, 9-stage ADCs. The MAX1184 is optimized for low-power, high-dynamic performance applications in imaging, instrumentation, and digital communication applications. This ADC operates from a single 2.7V to 3.6V supply, consuming only 105mW while delivering a typical signal-to-noise ratio (SNR) of 59.5dB at an input frequency of 7.5MHz and a sampling rate of 20Msps. The T/H driven input stages incorporate 400MHz (-3dB) input amplifiers. The converters may also be operated with single-ended inputs. In addition to low operating power, the MAX1184 features a 2.8mA sleep mode as well as a 1µA power-down mode to conserve power during idle periods.

An internal 2.048V precision bandgap reference sets the full-scale range of the ADC. A flexible reference structure allows the use of the internal or an externally derived reference, if desired for applications requiring increased accuracy or a different input voltage range.

The MAX1184 features parallel, CMOS-compatible three-state outputs. The digital output format is set to two's complement or straight offset binary through a single control pin. The device provides for a separate output power supply of 1.7V to 3.6V for flexible interfacing. The MAX1184 is available in a 7mm x 7mm, 48-pin TQFP package, and is specified for the extended industrial (-40°C to +85°C) temperature range.

Pin-compatible higher speed versions of the MAX1184 are also available. See Table 2 at end of data sheet for a list of pin-compatible versions. Refer to the MAX1180 data sheet for 105Msps, the MAX1181 data sheet for 80Msps, the MAX1182 data sheet for 65Msps, and the MAX1183 data sheet for 40Msps. In addition to these speed grades, this family includes a 20Msps multiplexed output version (MAX1185), for which digital data is presented time-interleaved on a single, parallel 10-bit output port.

Applications

High-Resolution Imaging

I/Q Channel Digitization

Multchannel IF Undersampling

Instrumentation

Video Application

Features

- ♦ **Single 3V Operation**
- ♦ **Excellent Dynamic Performance:**
  59.5dB SNR at f_{IN} = 7.5MHz
  74dB SFDR at f_{IN} = 7.5MHz
- ♦ **Low Power:**
  35mA (Normal Operation)
  2.8mA (Sleep Mode)
  1µA (Shutdown Mode)
- ♦ **0.02dB Gain and 0.25° Phase Matching (typ)**
- ♦ **Wide ±1V_{P-P} Differential Analog Input Voltage Range**
- ♦ **400MHz -3dB Input Bandwidth**
- ♦ **On-Chip 2.048V Precision Bandgap Reference**
- ♦ **User-Selectable Output Format—Two's Complement or Offset Binary**
- ♦ **48-Pin TQFP Package with Exposed Paddle for Improved Thermal Dissipation**
- ♦ **Evaluation Kit Available**

Ordering Information

PART	TEMP RANGE	PIN-PACKAGE
MAX1184ECM	-40°C to +85°C	48 TQFP-EP*
MAX1184ECM+	-40°C to +85°C	48 TQFP-EP*

**EP = Exposed paddle.*

+Denotes lead-free package.

Pin Configuration

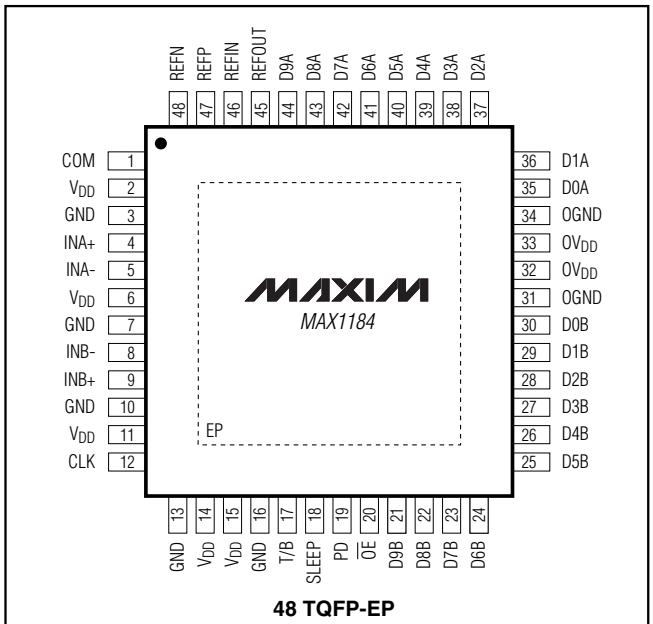

48 TQFP-EP

NOTE: THE PIN 1 INDICATOR FOR LEAD-FREE PACKAGE IS REPLACED BY A "+" SIGN.

For pricing, delivery, and ordering information, please contact Maxim/Dallas Direct! at 1-888-629-4642, or visit Maxim's website at www.maxim-ic.com.

Dual 10-Bit, 20Msps, 3V, Low-Power ADC with Internal Reference and Parallel Outputs

ABSOLUTE MAXIMUM RATINGS

V_{DD}, OVDD to GND .....-0.3V to +3.6V
OGND to GND .....-0.3V to +0.3V
INA+, INA-, INB+, INB- to GND .....-0.3V to V_{DD}
REFIN, REFOUT, REFP, REFN, CLK, COM to GND .....-0.3V to (V_{DD} + 0.3V)
$\overline{OE}$, PD, SLEEP, T/B, D9A–D0A, D9B–D0B to OGND .....-0.3V to (OV_{DD} + 0.3V)

Continuous Power Dissipation (T_A = +70°C)
48-Pin TQFP-EP (derate 30.4mW/°C above +70°C) 2430mW
Operating Temperature Range .....-40°C to +85°C
Junction Temperature .....+150°C
Storage Temperature Range .....-60°C to +150°C
Lead Temperature (soldering, 10s) .....+300°C

Stresses beyond those listed under "Absolute Maximum Ratings" may cause permanent damage to the device. These are stress ratings only, and functional operation of the device at these or any other conditions beyond those indicated in the operational sections of the specifications is not implied. Exposure to absolute maximum rating conditions for extended periods may affect device reliability.

ELECTRICAL CHARACTERISTICS

(V_{DD} = 3V, OV_{DD} = 2.5V, 0.1µF and 1.0µF capacitors from REFP, REFN, and COM to GND; REFOUT connected to REFIN through a 10kΩ resistor, V_{IN} = $2V_{P-P}$ (differential with respect to COM), C_L = 10pF at digital outputs (Note 1), f_{CLK} = 20MHz, T_A = T_{MIN} to T_{MAX}, unless otherwise noted. Typical values are at T_A = +25°C.) (Note 2)

PARAMETER	SYMBOL	CONDITIONS	MIN	TYP	MAX	UNITS
DC ACCURACY						
Resolution			10			Bits
Integral Nonlinearity	INL	f_{IN} = 7.5MHz		±0.5	±1.5	LSB
Differential Nonlinearity	DNL	f_{IN} = 7.5MHz, no missing codes guaranteed		±0.25	±1.0	LSB
Offset Error				< ±1	±1.8	% FS
Gain Error				0	±2	% FS
ANALOG INPUT						
Differential Input Voltage Range	V_{DIFF}	Differential or single-ended inputs		±1.0		V
Common-Mode Input Voltage Range	V_{CM}			V_{DD}/2 ± 0.5		V
Input Resistance	R_{IN}	Switched capacitor load		100		kΩ
Input Capacitance	C_{IN}			5		pF
CONVERSION RATE						
Maximum Clock Frequency	f_{CLK}		20			MHz
Data Latency				5		Clock Cycles
DYNAMIC CHARACTERISTICS						
Signal-to-Noise Ratio (Note 3)	SNR	$f_{INA\ or\ B}$ = 7.5MHz, T_A = +25°C	57.3	59.5		dB
		$f_{INA\ or\ B}$ = 12MHz		59.4		
Signal-to-Noise and Distortion (Note 3)	SINAD	$f_{INA\ or\ B}$ = 7.5MHz, T_A = +25°C	57	59.4		dB
		$f_{INA\ or\ B}$ = 12MHz		59.2		
Spurious-Free Dynamic Range (Note 3)	SFDR	$f_{INA\ or\ B}$ = 7.5MHz, T_A = +25°C	64	74		dBc
		$f_{INA\ or\ B}$ = 12MHz		72		

ELECTRICAL CHARACTERISTICS (continued)

(V_{DD} = 3V, OV_{DD} = 2.5V, 0.1µF and 1.0µF capacitors from REFP, REFN, and COM to GND; REFOUT connected to REFIN through a 10kΩ resistor, V_{IN} = $2V_{P-P}$ (differential with respect to COM), C_L = 10pF at digital outputs (Note 1), f_{CLK} = 20MHz, T_A = T_{MIN} to T_{MAX}, unless otherwise noted. Typical values are at T_A = +25°C.) (Note 2)

PARAMETER	SYMBOL	CONDITIONS	MIN	TYP	MAX	UNITS
Third-Harmonic Distortion (Note 3)	HD3	$f_{INA\ or\ B}$ = 7.5MHz		-74		dBc
		$f_{INA\ or\ B}$ = 12MHz		-72		
Total Harmonic Distortion (First 4 harmonics) (Note 3)	THD	$f_{INA\ or\ B}$ = 7.5MHz, T_A = +25°C		-72	-64	dBc
		$f_{INA\ or\ B}$ = 12MHz		-71		
Intermodulation Distortion	IMD	$f_{INA\ or\ B}$ = 11.985MHz at -6.5dBFS $f_{INA\ or\ B}$ = 12.893MHz at -6.5dBFS (Note 4)		-76		dBc
Small-Signal Bandwidth		Input at -20dBFS, differential inputs		500		MHz
Full-Power Bandwidth	FPBW	Input at -0.5dBFS, differential inputs		400		MHz
Aperture Delay	t_{AD}			1		ns
Aperture Jitter	t_{AJ}			2		ps_{RMS}
Overdrive Recovery Time		For 1.5 x full-scale input		2		ns
Differential Gain				±1		%
Differential Phase				±0.25		degrees
Output Noise		INA+ = INA- = INB+ = INB- = COM		0.2		LSB_{RMS}
INTERNAL REFERENCE						
Reference Output Voltage	REFOUT			2.048 ±3%		V
Reference Temperature Coefficient	TC_{REF}			60		ppm/°C
Load Regulation				1.25		mV/mA
BUFFERED EXTERNAL REFERENCE (V_{REFIN} = 2.048V)						
REFIN Input Voltage	V_{REFIN}			2.048		V
Positive Reference Output Voltage	V_{REFP}			2.012		V
Negative Reference Output Voltage	V_{REFN}			0.988		V
Differential Reference Output Voltage Range	ΔV_{REF}	ΔV_{REF} = V_{REFP} - V_{REFN}	0.95	1.024	1.10	V
REFIN Resistance	R_{REFIN}			>50		MΩ

Dual 10-Bit, 20Msps, 3V, Low-Power ADC with Internal Reference and Parallel Outputs

ELECTRICAL CHARACTERISTICS (continued)

(V_{DD} = 3V, OV_{DD} = 2.5V, 0.1µF and 1.0µF capacitors from REFP, REFN, and COM to GND; REFOUT connected to REFIN through a 10kΩ resistor, V_{IN} = $2V_{P-P}$ (differential with respect to. COM), C_L = 10pF at digital outputs (Note 1), f_{CLK} = 20MHz, T_A = T_{MIN} to T_{MAX}, unless otherwise noted. Typical values are at T_A = +25°C.) (Note 2)

PARAMETER	SYMBOL	CONDITIONS	MIN	TYP	MAX	UNITS
Maximum REFP, COM Source Current	I_{SOURCE}			5		mA
Maximum REFP, COM Sink Current	I_{SINK}			-250		µA
Maximum REFN Source Current	I_{SOURCE}			250		µA
Maximum REFN Sink Current	I_{SINK}			-5		mA
UNBUFFERED EXTERNAL REFERENCE (V_{REFIN} = AGND, reference voltage applied to REFP, REFN, and COM)						
REFP, REFN Input Resistance	R_{REFP}, R_{REFN}	Measured between REFP and COM, and REFN and COM		4		kΩ
Differential Reference Input Voltage	ΔV_{REF}	$\Delta V_{REF} = V_{REFP} - V_{REFP}$		1.024 ±10%		V
COM Input Voltage	V_{COM}			$V_{DD}/2$ ±10%		V
REFP Input Voltage	V_{REFP}			$V_{COM} + \Delta V_{REF} / 2$		V
REFN Input Voltage	V_{REFN}			$V_{COM} - \Delta V_{REF} / 2$		V
DIGITAL INPUTS (CLK, PD, $\overline{OE}$, SLEEP, T/B))						
Input High Threshold	V_{IH}	CLK	0.8 x V_{DD}			V
		PD, $\overline{OE}$, SLEEP, T/B	0.8 x OV_{DD}			
Input Low Threshold	V_{IL}	CLK			0.2 x V_{DD}	V
		PD, $\overline{OE}$, SLEEP, T/B			0.2 x OV_{DD}	
Input Hysteresis	V_{HYST}			0.1		V
Input Leakage	I_{IH}	V_{IH} = OV_{DD} or V_{DD} (CLK)			±5	µA
	I_{IL}	V_{IL} = 0V			±5	
Input Capacitance	C_{IN}			5		pF
DIGITAL OUTPUTS (D9A–D0A, D9B–D0B)						
Output Voltage Low	V_{OL}	I_{SINK} = 200µA			0.2	V
Output Voltage High	V_{OH}	I_{SOURCE} = 200µA	OV_{DD} - 0.2			V
Three-State Leakage Current	I_{LEAK}	$\overline{OE}$ = OV_{DD}			±10	µA
Three-State Output Capacitance	C_{OUT}	$\overline{OE}$ = OV_{DD}		5		pF

ELECTRICAL CHARACTERISTICS (continued)

(V_{DD} = 3V, OV_{DD} = 2.5V, 0.1µF and 1.0µF capacitors from REFP, REFN, and COM to GND; REFOUT connected to REFIN through a 10kΩ resistor, V_{IN} = $2V_{P-P}$ (differential with respect to. COM), C_L = 10pF at digital outputs (Note 1), f_{CLK} = 20MHz, T_A = T_{MIN} to T_{MAX}, unless otherwise noted. Typical values are at T_A = +25°C.) (Note 2)

PARAMETER	SYMBOL	CONDITIONS	MIN	TYP	MAX	UNITS
POWER REQUIREMENTS						
Analog Supply Voltage Range	V_{DD}		2.7	3.0	3.6	V
Output Supply Voltage Range	OV_{DD}		1.7	2.5	3.6	V
Analog Supply Current	I_{VDD}	Operating, $f_{INA\ or\ B}$ = 7.5MHz at -0.5dBFS		35	50	mA
		Sleep mode		2.8		
		Shutdown, clock idle, PD = $\overline{OE}$ = OV_{DD}		1	15	µA
Output Supply Current	I_{OVDD}	Operating, C_L = 15pF, $f_{INA\ or\ B}$ = 7.5MHz at -0.5dBFS		3.8		mA
		Sleep mode		100		µA
		Shutdown, clock idle, PD = $\overline{OE}$ = OV_{DD}		2	10	
Power Dissipation	PDISS	Operating, $f_{INA\ or\ B}$ = 7.5MHz at -0.5dBFS		105	150	mW
		Sleep mode		8.4		
		Shutdown, clock idle, PD = $\overline{OE}$ = OV_{DD}		3	45	µW
Power-Supply Rejection Ratio	PSRR	Offset		±0.2		mV/V
		Gain		±0.1		%/V
TIMING CHARACTERISTICS						
CLK Rise to Output Data Valid	t_{DO}	Figure 3 (Note 5)		5	8	ns
Output Enable Time	t_{ENABLE}	Figure 4		10		ns
Output Disable Time	$t_{DISABLE}$	Figure 4		1.5		ns
CLK Pulse Width High	t_{CH}	Figure 3, clock period: 50ns		25 ± 7.5		ns
CLK Pulse Width Low	t_{CL}	Figure 3, clock period: 50ns		25 ± 7.5		ns
Wake-Up Time	t_{WAKE}	Wake up from sleep mode (Note 6)		0.51		µs
		Wake up from shutdown (Note 6)		1.5		
CHANNEL-TO-CHANNEL MATCHING						
Crosstalk		$f_{INA\ or\ B}$ = 7.5MHz at -0.5dBFS		-70		dB
Gain Matching		$f_{INA\ or\ B}$ = 7.5MHz at -0.5dBFS		0.02	±0.2	dB
Phase Matching		$f_{INA\ or\ B}$ = 7.5MHz at -0.5dBFS		0.25		degrees

Note 1: Equivalent dynamic performance is obtainable over full OV_{DD} range with reduced C_L.

Note 2: Specifications at ≥ +25°C are guaranteed by production test and < +25°C are guaranteed by design and characterization.

Note 3: SNR, SINAD, THD, SFDR, and HD3 are based on an analog input voltage of -0.5dBFS referenced to a 1.024V full-scale input voltage range.

Note 4: Intermodulation distortion is the total power of the intermodulation products relative to the individual carrier. This number is 6dB or better, if referenced to the two-tone envelope.

Note 5: Digital outputs settle to V_{IH}, V_{IL}. Parameter guaranteed by design.

Note 6: With REFIN driven externally, REFP, COM, and REFN are left floating while powered down.

Dual 10-Bit, 20Msps, 3V, Low-Power ADC with Internal Reference and Parallel Outputs

Typical Operating Characteristics

(V_{DD} = 3V, OV_{DD} = 2.5V, V_{REFIN} = 2.048V, differential input at -0.5dBFS, f_{CLK} = 20MHz, $C_L \approx$ 10pF, T_A = +25°C, unless otherwise noted.)

FFT PLOT CHA (DIFFERENTIAL INPUT, 8192-POINT DATA RECORD)

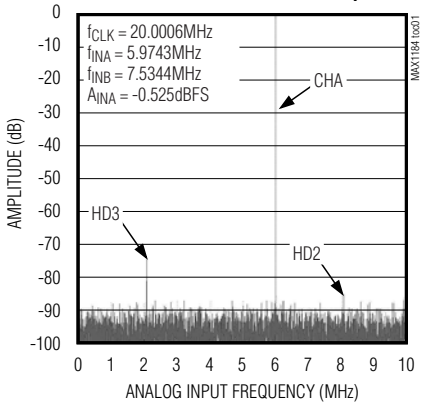

FFT PLOT CHB (DIFFERENTIAL INPUT, 8192-POINT DATA RECORD)

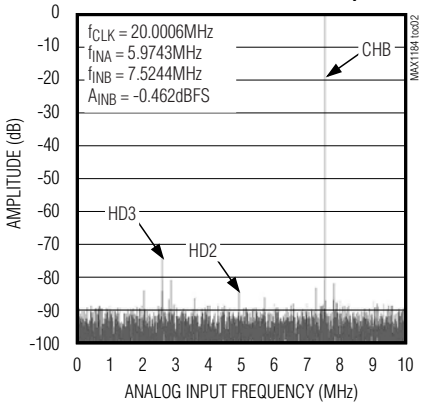

FFT PLOT CHA (DIFFERENTIAL INPUT, 8192-POINT DATA RECORD)

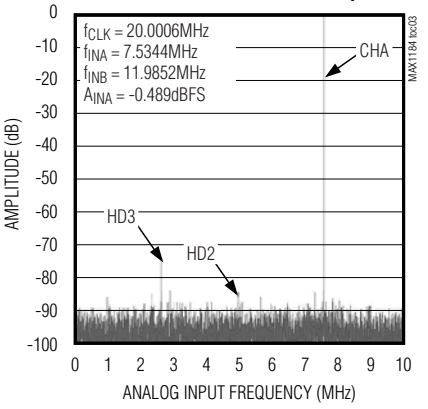

FFT PLOT CHB (DIFFERENTIAL INPUT, 8192-POINT DATA RECORD)

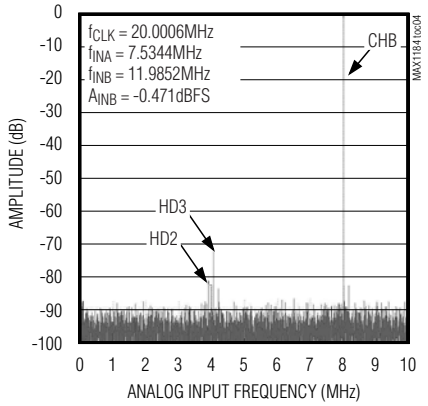

TWO-TONE IMD PLOT DIFFERENTIAL INPUT, 8192-POINT DATA RECORD

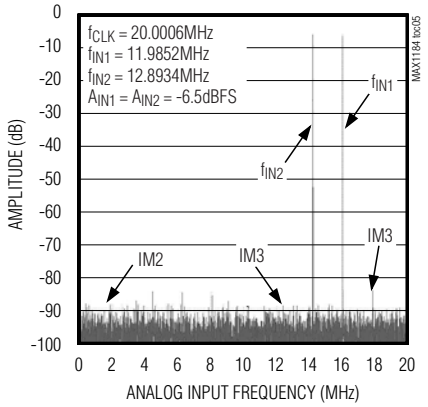

SIGNAL-TO-NOISE RATIO vs. ANALOG INPUT FREQUENCY

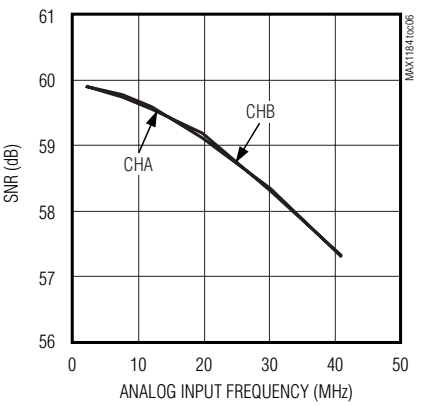

SIGNAL-TO-NOISE PLUS DISTORTION vs. ANALOG INPUT FREQUENCY

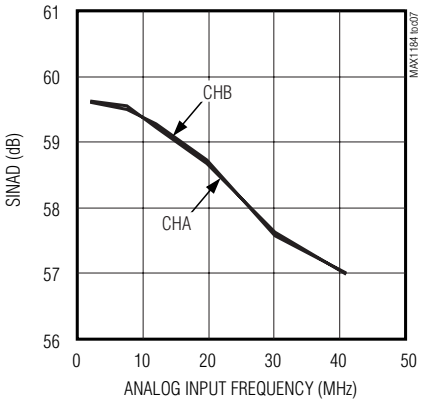

TOTAL HARMONIC DISTORTION vs. ANALOG INPUT FREQUENCY

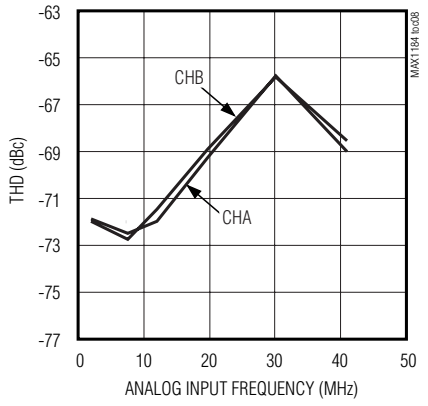

SPURIOUS-FREE DYNAMIC RANGE vs. ANALOG INPUT FREQUENCY

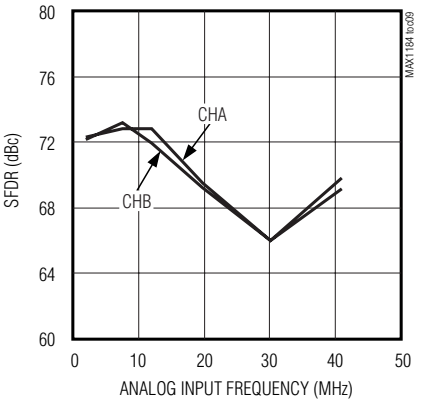

Typical Operating Characteristics (continued)

(V_{DD} = 3V, OV_{DD} = 2.5V, V_{REFIN} = 2.048V, differential input at -0.5dBFS, f_{CLK} = 20MHz, $C_L \approx$ 10pF, T_A = +25°C, unless otherwise noted.)

FULL-POWER INPUT BANDWIDTH vs. ANALOG INPUT FREQUENCY, SINGLE-ENDED

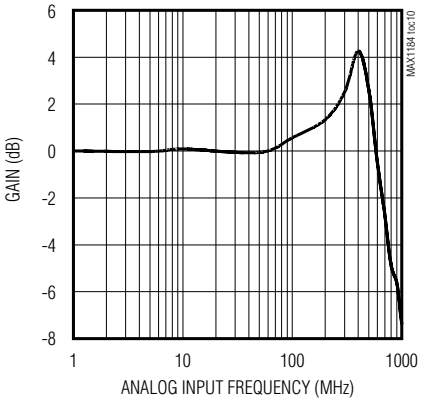

SMALL-SIGNAL INPUT BANDWIDTH vs. ANALOG INPUT FREQUENCY, SINGLE-ENDED

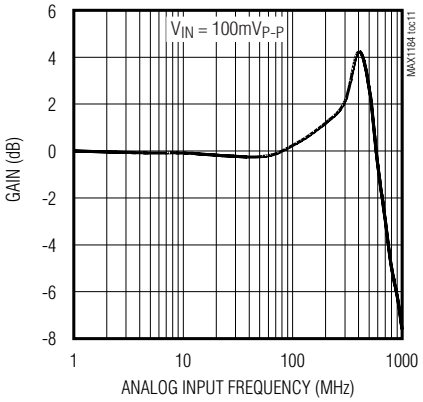

SIGNAL-TO-NOISE RATIO vs. ANALOG INPUT POWER (f_{IN} = 7.5344MHz)

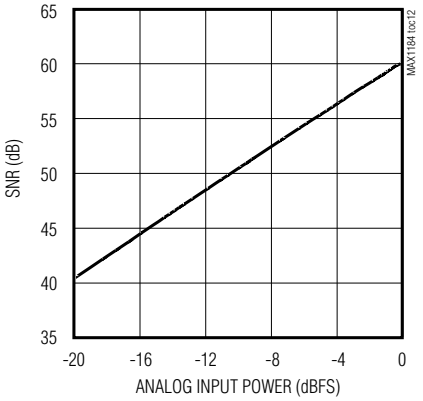

SIGNAL-TO-NOISE PLUS DISTORTION vs. ANALOG INPUT POWER (f_{IN} = 7.5344MHz)

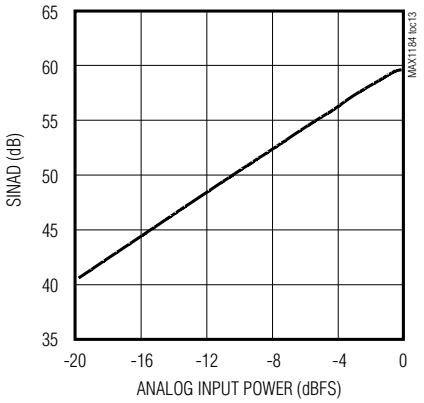

TOTAL HARMONIC DISTORTION vs. ANALOG INPUT POWER (f_{IN} = 7.5344MHz)

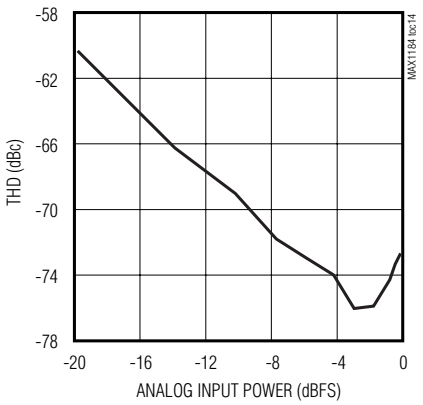

SPURIOUS-FREE DYNAMIC RANGE vs. ANALOG INPUT POWER (f_{IN} = 7.5344MHz)

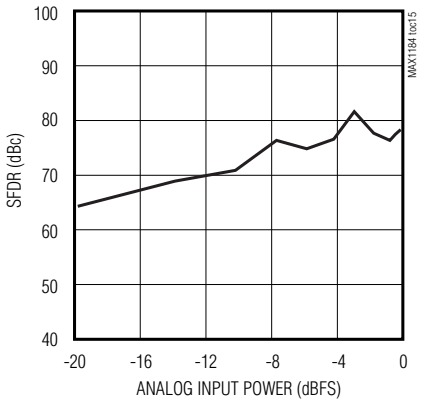

INTEGRAL NONLINEARITY

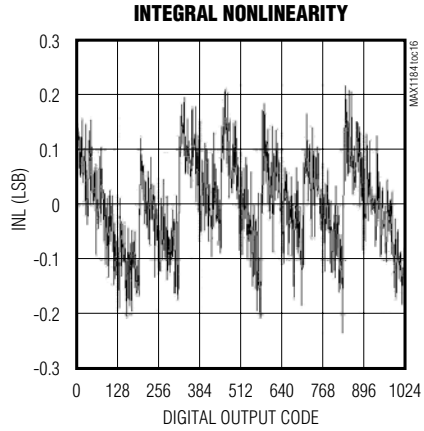

DIFFERENTIAL NONLINEARITY

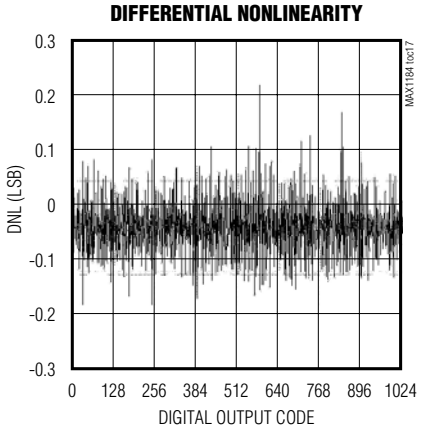

GAIN ERROR vs. TEMPERATURE

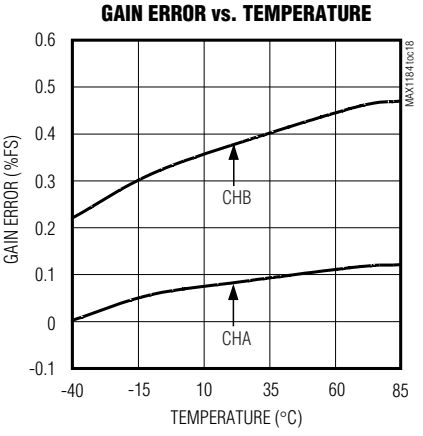

Dual 10-Bit, 20Msps, 3V, Low-Power ADC with Internal Reference and Parallel Outputs

Typical Operating Characteristics (continued)

(V_{DD} = 3V, OV_{DD} = 2.5V, V_{REFIN} = 2.048V, differential input at -0.5dBFS, f_{CLK} = 20MHz, $C_L \approx$ 10pF, T_A = +25°C, unless otherwise noted.)

OFFSET ERROR vs. TEMPERATURE

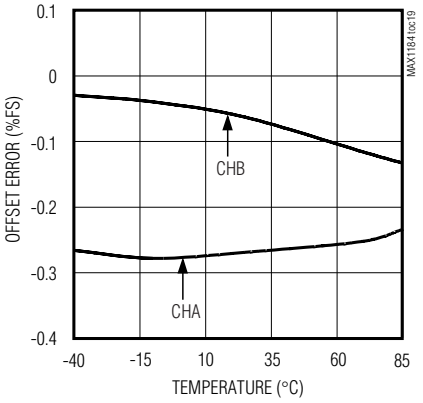

ANALOG SUPPLY CURRENT vs. ANALOG SUPPLY VOLTAGE

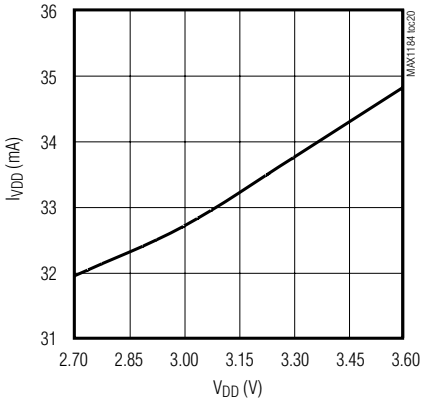

ANALOG SUPPLY CURRENT vs. TEMPERATURE

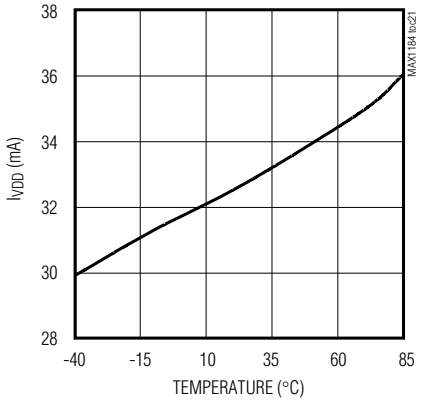

ANALOG POWER-DOWN CURRENT vs. ANALOG SUPPLY VOLTAGE

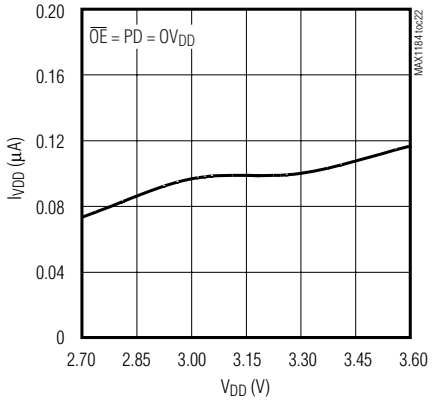

SNR/SINAD, -THD/SFDR vs. CLOCK DUTY CYCLE

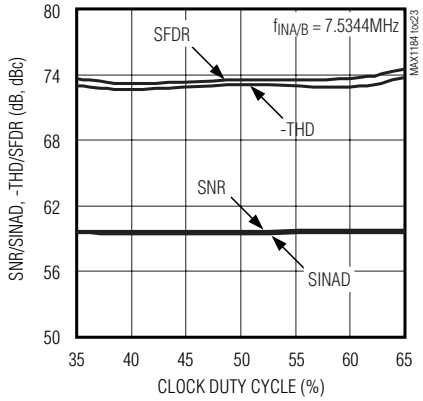

INTERNAL REFERENCE VOLTAGE vs. ANALOG SUPPLY VOLTAGE

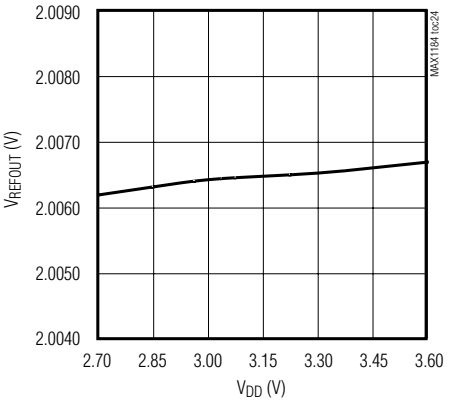

Dual 10-Bit, 20Msps, 3V, Low-Power ADC with Internal Reference and Parallel Outputs

Typical Operating Characteristics (continued)

(V_{DD} = 3V, OV_{DD} = 2.5V, V_{REFIN} = 2.048V, differential input at -0.5dBFS, f_{CLK} = 20MHz, $C_L \approx$ 10pF, T_A = +25°C, unless otherwise noted.)

INTERNAL REFERENCE VOLTAGE vs. TEMPERATURE

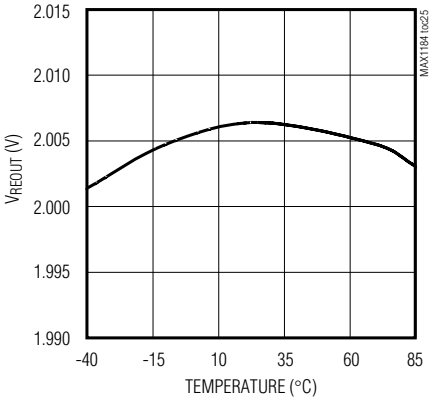

OUTPUT NOISE HISTOGRAM (DC INPUT)

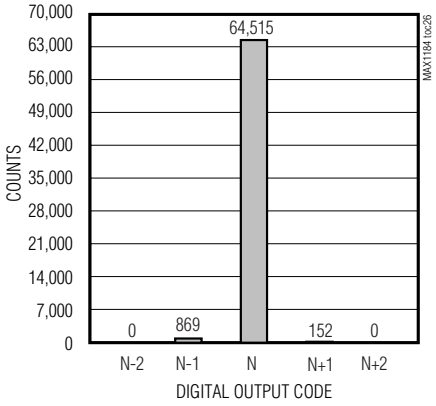

Pin Description

PIN	NAME	FUNCTION
1	COM	Common-Mode Voltage Input/Output. Bypass to GND with a ≥ 0.1µF capacitor.
2, 6, 11, 14, 15	V_{DD}	Analog Supply Voltage. Bypass each pin to GND with a 0.1µF capacitor. The analog supply accepts an input range of 2.7V to 3.6V.
3, 7, 10, 13, 16	GND	Analog Ground
4	INA+	Channel A Positive Analog Input. For single-ended operation, connect signal source to INA+.
5	INA-	Channel A Negative Analog Input. For single-ended operation, connect INA- to COM.
8	INB-	Channel B Negative Analog Input. For single-ended operation, connect INB- to COM.
9	INB+	Channel B Positive Analog Input. For single-ended operation, connect signal source to INB+.
12	CLK	Converter Clock Input
17	T/B	T/B selects the ADC digital output format. High: Two's complement. Low: Straight offset binary.
18	SLEEP	Sleep Mode Input. High: Deactivates the two ADCs, but leaves the reference bias circuit active. Low: Normal operation.
19	PD	Power-Down Input. High: Power-down mode Low: Normal operation
20	$\overline{OE}$	Output Enable Input. High: Digital outputs disabled Low: Digital outputs enabled

Dual 10-Bit, 20Msps, 3V, Low-Power ADC with Internal Reference and Parallel Outputs

Pin Description (continued)

PIN	NAME	FUNCTION
21	D9B	Three-State Digital Output, Bit 9 (MSB), Channel B
22	D8B	Three-State Digital Output, Bit 8, Channel B
23	D7B	Three-State Digital Output, Bit 7, Channel B
24	D6B	Three-State Digital Output, Bit 6, Channel B
25	D5B	Three-State Digital Output, Bit 5, Channel B
26	D4B	Three-State Digital Output, Bit 4, Channel B
27	D3B	Three-State Digital Output, Bit 3, Channel B
28	D2B	Three-State Digital Output, Bit 2, Channel B
29	D1B	Three-State Digital Output, Bit 1, Channel B
30	D0B	Three-State Digital Output, Bit 0 (LSB), Channel B
31, 34	OGND	Output Driver Ground
32, 33	OV_{DD}	Output Driver Supply Voltage. Bypass each pin to OGND with a 0.1µF capacitor. The output driver supply accepts an input range of 1.7V to 3.6V.
35	D0A	Three-State Digital Output, Bit 0 (LSB), Channel A
36	D1A	Three-State Digital Output, Bit 1, Channel A
37	D2A	Three-State Digital Output, Bit 2, Channel A
38	D3A	Three-State Digital Output, Bit 3, Channel A
39	D4A	Three-State Digital Output, Bit 4, Channel A
40	D5A	Three-State Digital Output, Bit 5, Channel A
41	D6A	Three-State Digital Output, Bit 6, Channel A
42	D7A	Three-State Digital Output, Bit 7, Channel A
43	D8A	Three-State Digital Output, Bit 8, Channel A
44	D9A	Three-State Digital Output, Bit 9 (MSB), Channel A
45	REFOUT	Internal Reference Voltage Output. May be connected to REFIN through a resistor or a resistor divider.
46	REFIN	Reference Input. $V_{REFIN} = 2 \times (V_{REFP} - V_{REFN})$. Bypass to GND with a >1nF capacitor.
47	REFP	Positive Reference Input/Output. Conversion range is $\pm (V_{REFP} - V_{REFN})$. Bypass to GND with a > 0.1µF capacitor.
48	REFN	Negative Reference Input/Output. Conversion range is $\pm (V_{REFP} - V_{REFN})$. Bypass to GND with a > 0.1µF capacitor.
—	EP	Exposed Pad. Connect to analog ground.

Detailed Description

The MAX1184 uses a 9-stage, fully-differential pipelined architecture (Figure 1) that allows for high-speed conversion while minimizing power consumption. Samples taken at the inputs move progressively through the pipeline stages every half clock cycle. Counting the delay through the output latch, the clock-cycle latency is five clock cycles.

1.5-bit (2-comparator) flash ADCs convert the held-input voltages into a digital code. The digital-to-analog converters (DACs) convert the digitized results back into analog voltages, which are then subtracted from the original held input signals. The resulting error signals are then multiplied by two and the residues are passed along to the next pipeline stages, where the process is repeated until the signals have been processed by all nine stages. Digital error correction compensates for ADC comparator offsets in each of these pipeline stages and ensures no missing codes.

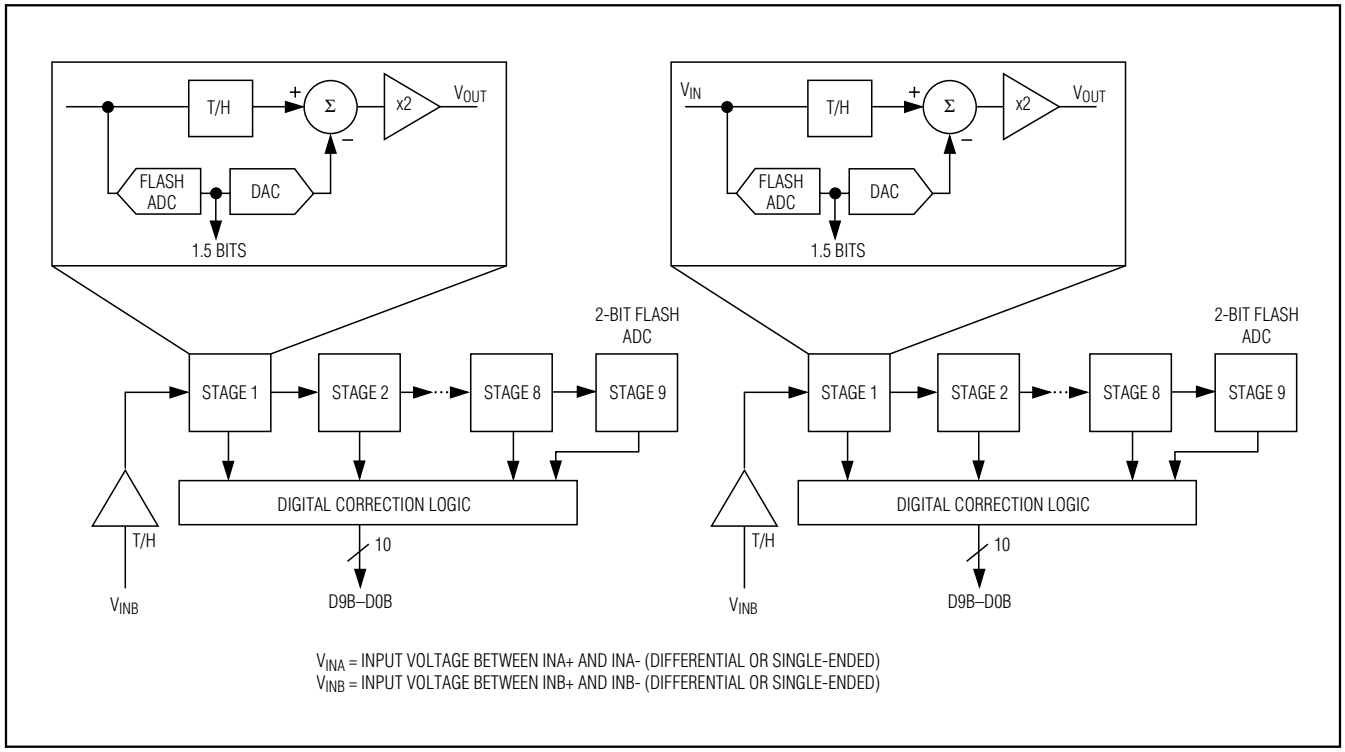

Figure 1. Pipelined Architecture—Stage Blocks

Dual 10-Bit, 20Msps, 3V, Low-Power ADC with Internal Reference and Parallel Outputs

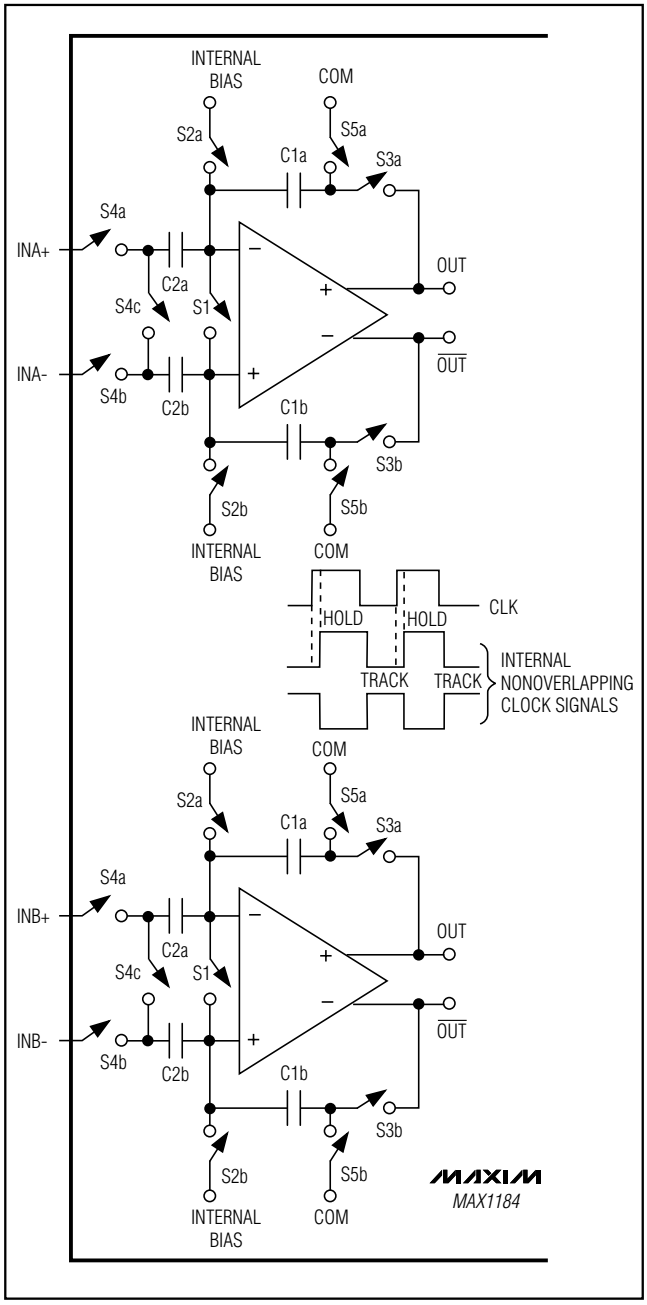

Figure 2. MAX1184 T/H Amplifiers

Input Track-and-Hold (T/H) Circuits

Figure 2 displays a simplified functional diagram of the input track-and-hold (T/H) circuits in both track-and-hold mode. In track mode, switches S1, S2a, S2b, S4a, S4b, S5a, and S5b are closed. The fully differential circuits sample the input signals onto the two capacitors (C2a and C2b) through switches S4a and S4b. S2a and S2b set the common mode for the amplifier input, and open simultaneously with S1, sampling the input waveform. Switches S4a and S4b are then opened before switches S3a and S3b, connect capacitors C1a and C1b to the output of the amplifier, and switch S4c is closed. The resulting differential voltages are held on capacitors C2a and C2b. The amplifiers are used to charge capacitors C1a and C1b to the same values originally held on C2a and C2b. These values are then presented to the first-stage quantizers and isolate the pipelines from the fast-changing inputs. The wide input bandwidth T/H amplifiers allow the MAX1184 to track-and-sample/hold analog inputs of high frequencies (> Nyquist). The ADC inputs (INA+, INB+, INA-, and INB-) can be driven either differentially or single-ended. Match the impedance of INA+ and INA-, as well as INB+ and INB- and set the common-mode voltage to midsupply ($V_{DD}/2$) for optimum performance.

Analog Inputs and Reference Configurations

The full-scale range of the MAX1184 is determined by the internally generated voltage difference between REFP ($V_{DD}/2 + V_{REFIN}/4$) and REFN ($V_{DD}/2 - V_{REFIN}/4$). The full-scale range for both on-chip ADCs is adjustable through the REFIN pin, which is provided for this purpose.

REFOUT, REFP, COM ($V_{DD}/2$), and REFN are internally buffered low-impedance outputs.

The MAX1184 provides three modes of reference operation:

- Internal reference mode
- Buffered external reference mode
- Unbuffered external reference mode

In internal reference mode, connect the internal reference output REFOUT to REFIN through a resistor (e.g., 10kΩ) or resistor-divider, if an application requires a reduced full-scale range. For stability and noise filtering purposes, bypass REFIN with a >10nF capacitor to GND. In internal reference mode, REFOUT, COM, REFP, and REFN become low-impedance outputs.

In buffered external reference mode, adjust the reference voltage levels externally by applying a stable and accurate voltage at REFIN. In this mode, COM, REFP, and REFN become outputs. REFOUT may be left open or connected to REFIN through a >10kΩ resistor.

In unbuffered external reference mode, connect REFIN to GND. This deactivates the on-chip reference buffers for REFP, COM, and REFN. With their buffers shut down, these nodes become high impedance and may be driven through separate external reference sources.

Clock Input (CLK)

The MAX1184's CLK input accepts CMOS-compatible clock signals. Since the interstage conversion of the device depends on the repeatability of the rising and falling edges of the external clock, use a clock with low jitter and fast rise and fall times (< 2ns). In particular, sampling occurs on the rising edge of the clock signal, requiring this edge to provide lowest possible jitter. Any significant aperture jitter would limit the SNR performance of the on-chip ADCs as follows:

$$SNR = 20 \times \log\left(\frac{1}{2 \times \pi \times f_{IN} \times t_{AJ})}\right)$$

where f_{IN} represents the analog input frequency and t_{AJ} is the time of the aperture jitter.

Clock jitter is especially critical for undersampling applications. The clock input should always be considered as an analog input and routed away from any analog input or other digital signal lines.

The MAX1184 clock input operates with a voltage threshold set to $V_{DD}/2$. Clock inputs with a duty cycle other than 50%, must meet the specifications for high and low periods as stated in the *Electrical Characteristics*.

System Timing Requirements

Figure 3 depicts the relationship between the clock input, analog input, and data output. The MAX1184 samples at the rising edge of the input clock. Output data for channels A and B is valid on the next rising edge of the input clock. The output data has an internal latency of five clock cycles. Figure 4 also determines the relationship between the input clock parameters and the valid output data on channels A and B.

Digital Output Data, Output Data Format Selection (T/B), Output Enable ($\overline{OE}$)

All digital outputs, D0A–D9A (Channel A) and D0B–D9B (Channel B), are TTL/CMOS logic-compatible. There is a five-clock-cycle latency between any particular sample and its corresponding output data.

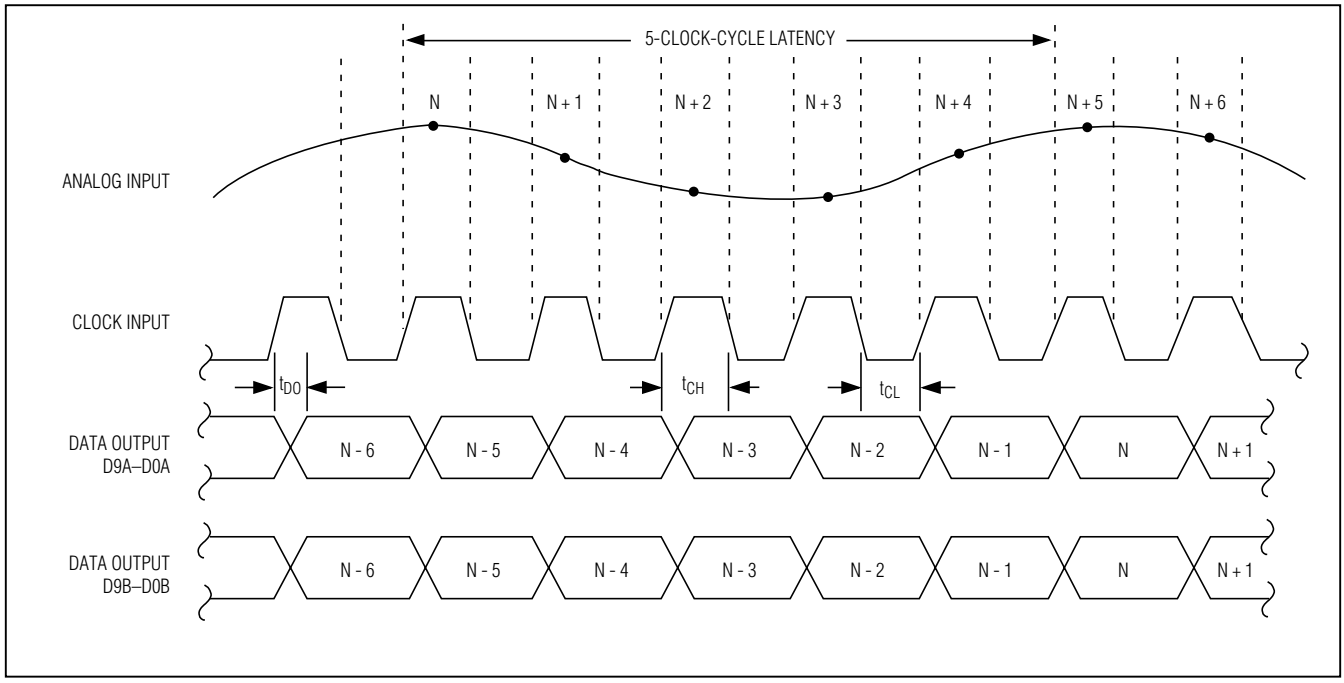

Figure 3. System Timing Diagram

Dual 10-Bit, 20Msps, 3V, Low-Power ADC with Internal Reference and Parallel Outputs

Table 1. MAX1184 Output Codes For Differential Inputs

DIFFERENTIAL INPUT VOLTAGE*	DIFFERENTIAL INPUT	STRAIGHT OFFSET BINARY T/B = 0	TWO'S COMPLEMENT T/B = 1
V_{REF} x 511/512	+FULL SCALE - 1LSB	11 1111 1111	01 1111 1111
V_{REF} x 1/512	+ 1 LSB	10 0000 0001	00 0000 0001
0	Bipolar Zero	10 0000 0000	00 0000 0000
- V_{REF} x 1/512	- 1 LSB	01 1111 1111	11 1111 1111
-V_{REF} x 511/512	- FULL SCALE + 1 LSB	00 0000 0001	10 0000 0001
-V_{REF} x 512/512	- FULL SCALE	00 0000 0000	10 0000 0000

*$V_{REF} = V_{REFP} - V_{REFN}$

The output coding can be chosen to be either straight offset binary or two's complement (Table 1) controlled by a single pin (T/B). Pull T/B low to select offset binary and high to activate two's complement output coding. The capacitive load on the digital outputs D0A–D9A and D0B–D9B should be kept as low as possible (<15pF) to avoid large digital currents that could feed back into the analog portion of the MAX1184, thereby degrading its dynamic performance. Using buffers on the digital outputs of the ADCs can further isolate the digital outputs from heavy capacitive loads. To further improve the dynamic performance of the MAX1184, small-series resistors (e.g., 100Ω) may be added to the digital output paths close to the MAX1184.

Figure 4 displays the timing relationship between output enable and data output valid as well as power-down/wake-up and data output valid.

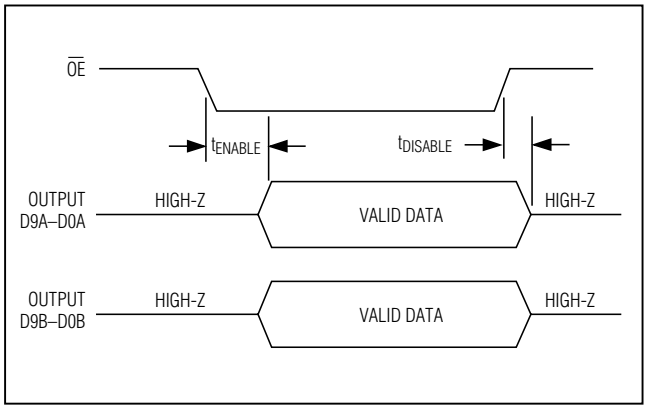

Figure 4. Output Timing Diagram

Power-Down (PD) and Sleep (SLEEP) Modes

The MAX1184 offers two power-save modes—sleep and full power-down mode. In sleep mode (SLEEP = 1), only the reference bias circuit is active (both ADCs are disabled), and current consumption is reduced to 2.8mA.

To enter full power-down mode, pull PD high. With $\overline{OE}$ simultaneously low, all outputs are latched at the last value prior to the power down. Pulling $\overline{OE}$ high forces the digital outputs into a high-impedance state.

Applications Information

Figure 5 depicts a typical application circuit containing two single-ended to differential converters. The internal reference provides a $V_{DD}/2$ output voltage for level-shifting purposes. The input is buffered and then split to a voltage follower and inverter. One lowpass filter per ADC suppresses some of the wideband noise associated with high-speed op amps follows the amplifiers. The user may select the R_{ISO} and C_{IN} values to optimize the filter performance, to suit a particular application. For the application in Figure 5, a R_{ISO} of 50Ω is placed before the capacitive load to prevent ringing and oscillation. The 22pF C_{IN} capacitor acts as a small bypassing capacitor.

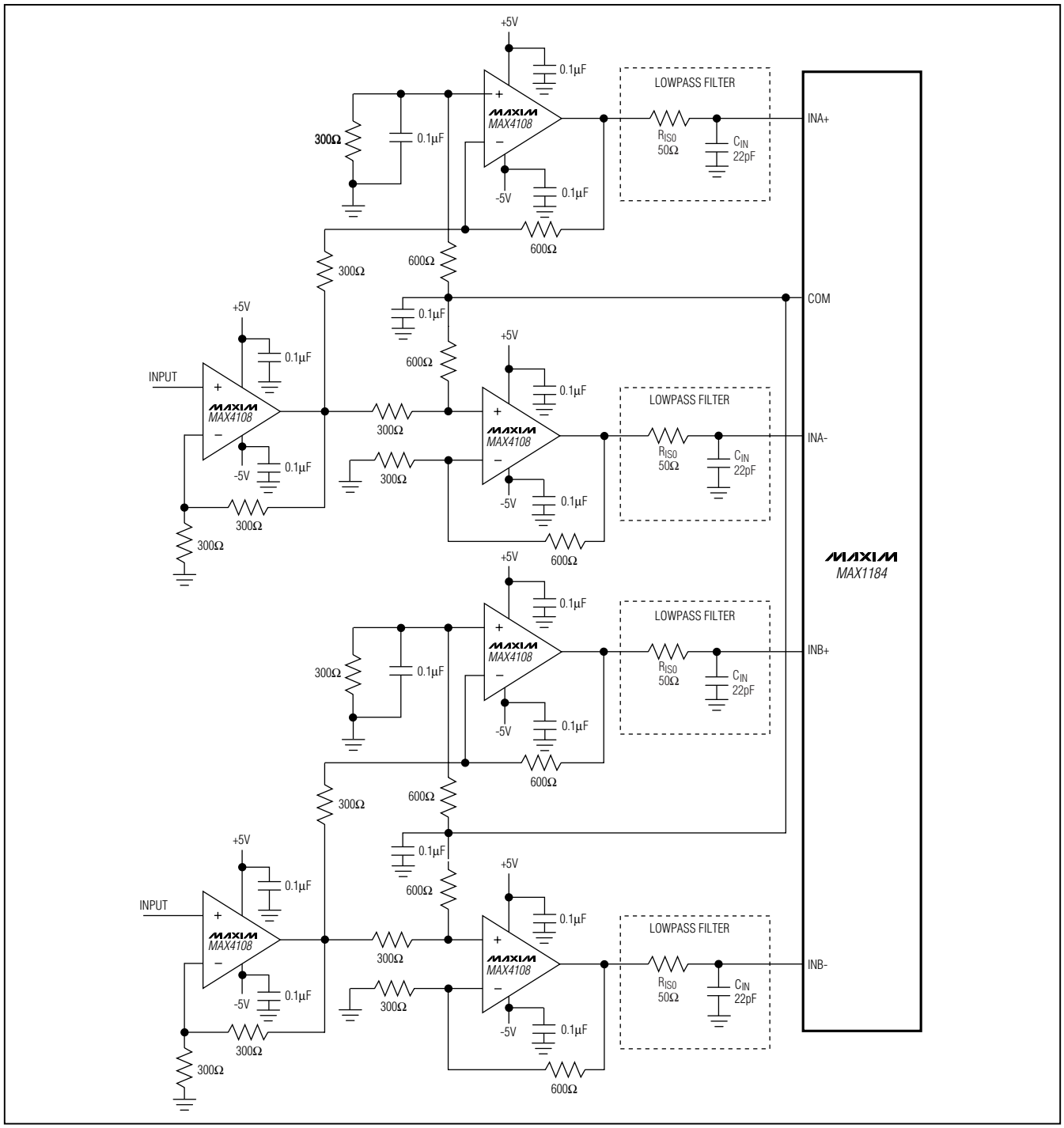

Figure 5. Typical Application for Single-Ended to Differential Conversion

Dual 10-Bit, 20Msps, 3V, Low-Power ADC with Internal Reference and Parallel Outputs

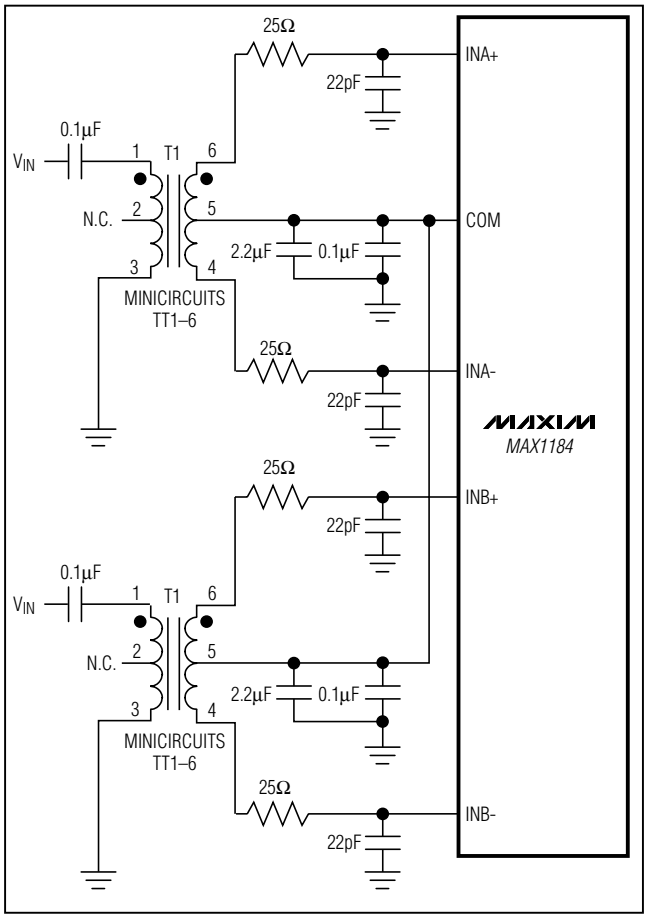

Figure 6. Transformer-Coupled Input Drive

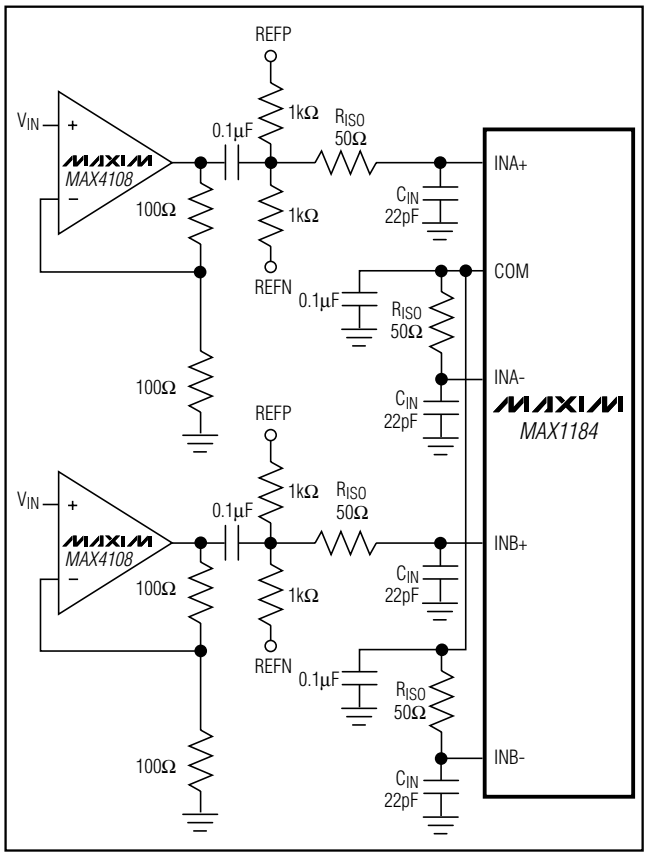

Figure 7: Using an Op Amp for Single-Ended, AC-Coupled Input Drive

Using Transformer Coupling

A RF transformer (Figure 6) provides an excellent solution to convert a single-ended source signal to a fully differential signal, required by the MAX1184 for optimum performance. Connecting the center tap of the transformer to COM provides a $V_{DD}/2$ DC level shift to the input. Although a 1:1 transformer is shown, a step-up transformer may be selected to reduce the drive requirements. A reduced signal swing from the input driver, such as an op amp, may also improve the overall distortion.

In general, the MAX1184 provides better SFDR and THD with fully-differential input signals than single-ended drive, especially for very high input frequencies. In differential input mode, even-order harmonics are lower as both inputs (INA+, INA- and/or INB+, INB-) are balanced, and each of the ADC inputs only requires half the signal swing compared to a single-ended mode.

Single-Ended AC-Coupled Input Signal

Figure 7 shows an AC-coupled, single-ended application. Amplifiers like the MAX4108 provide high speed, high bandwidth, low noise, and low distortion to maintain the integrity of the input signal.

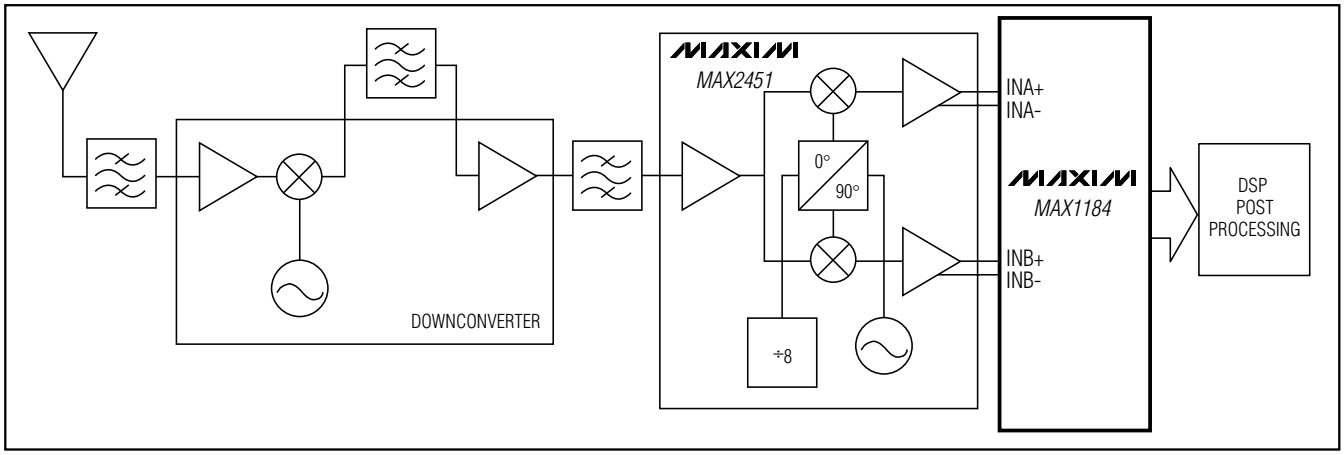

Figure 8. Typical QAM Application, Using the MAX1184

Typical QAM Demodulation Application

The most frequently used modulation technique for digital communications applications is probably the quadrature amplitude modulation (QAM). Typically found in spread-spectrum-based systems, a QAM signal represents a carrier frequency modulated in both amplitude and phase. At the transmitter, modulating the baseband signal with quadrature outputs, a local oscillator followed by subsequent up-conversion can generate the QAM signal. The result is an in-phase (I) and a quadrature (Q) carrier component, where the Q component is 90 degree phase-shifted with respect to the in-phase component. At the receiver, the QAM signal is divided down into it's I and Q components, essentially representing the modulation process reversed. Figure 8 displays the demodulation process performed in the analog domain, using the dual matched 3V, 10-bit ADC (MAX1184), and the MAX2451 quadrature demodulator to recover and digitize the I and Q baseband signals. Before being digitized by the MAX1184, the mixed down-signal components may be filtered by matched analog filters, such as Nyquist or pulse-shaping filters, which remove any unwanted images from the mixing process, thereby enhancing the overall signal-to-noise (SNR) performance and minimizing intersymbol interference.

Grounding, Bypassing, and Board Layout

The MAX1184 requires high-speed board layout design techniques. Locate all bypass capacitors as close to the device as possible, preferably on the same side as the ADC, using surface-mount devices for minimum inductance. Bypass V_{DD}, REFP, REFN, and COM with two parallel 0.1µF ceramic capacitors and a 2.2µF bipolar capacitor to GND. Follow the same rules to bypass the digital supply (OV_{DD}) to OGND. Multilayer boards with separated ground and power planes produce the highest level of signal integrity. Consider the use of a split ground plane arranged to match the physical location of the analog ground (GND) and the digital output driver ground (OGND) on the ADC's package. The two ground planes should be joined at a single point such that the noisy digital ground currents do not interfere with the analog ground plane. The ideal location of this connection can be determined experimentally at a point along the gap between the two ground planes, which produces optimum results. Make this connection with a low-value, surface-mount resistor (1Ω to 5Ω), a ferrite bead, or a direct short. Alternatively, all ground pins could share the same ground plane, if the ground plane is sufficiently isolated from any noisy, digital systems ground plane (e.g., downstream output buffer or DSP ground plane). Route high-speed digital signal traces away from the sensitive analog traces of either channel. Make sure to isolate the analog input lines to each respective converter to minimize channel-to-channel crosstalk. Keep all signal lines short and free of 90 degree turns.

Static Parameter Definitions

Integral Nonlinearity (INL)

Integral nonlinearity is the deviation of the values on an actual transfer function from a straight line. This straight line can be either a best straight-line fit or a line drawn between the endpoints of the transfer function, once offset and gain errors have been nullified. The static linearity parameters for the MAX1184 are measured using the best straight-line fit method.

Dual 10-Bit, 20Msps, 3V, Low-Power ADC with Internal Reference and Parallel Outputs

Differential Nonlinearity (DNL)

Differential nonlinearity is the difference between an actual step width and the ideal value of 1LSB. A DNL error specification of less than 1LSB guarantees no missing codes and a monotonic transfer function.

Dynamic Parameter Definitions

Aperture Jitter

Figure 9 depicts the aperture jitter (t_{AJ}), which is the sample-to-sample variation in the aperture delay.

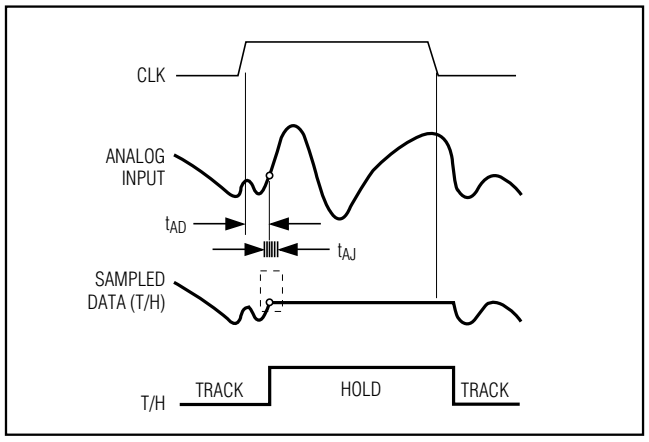

Figure 9. T/H Aperture Timing

Aperture Delay

Aperture delay (t_{AD}) is the time defined between the falling edge of the sampling clock and the instant when an actual sample is taken (Figure 9).

Signal-to-Noise Ratio (SNR)

For a waveform perfectly reconstructed from digital samples, the theoretical maximum SNR is the ratio of the full-scale analog input (RMS value) to the RMS quantization error (residual error). The ideal, theoretical minimum analog-to-digital noise is caused by quantization error only and results directly from the ADC's resolution (N-Bits):

$$SNR_{dB[max]} = 6.02 \times N + 1.76$$

In reality, there are other noise sources besides quantization noise (e.g. thermal noise, reference noise, clock jitter, etc.). SNR is computed by taking the ratio of the RMS signal to the RMS noise, which includes all spectral components minus the fundamental, the first five harmonics, and the DC offset.

Signal-to-Noise Plus Distortion (SINAD)

SINAD is computed by taking the ratio of the RMS signal to all spectral components minus the fundamental and the DC offset.

Total Harmonic Distortion (THD)

THD is typically the ratio of the RMS sum of the first four harmonics of the input signal to the fundamental itself. This is expressed as:

$$THD = 20 \times \log_{10}\left(\frac{\sqrt{V_2^2 + V_3^2 + V_4^2 + V_5^2}}{V_1}\right)$$

where V_1 is the fundamental amplitude, and V_2 through V_5 are the amplitudes of the 2nd- through 5th-order harmonics.

Spurious-Free Dynamic Range (SFDR)

SFDR is the ratio expressed in decibels of the RMS amplitude of the fundamental (maximum signal component) to the RMS value of the next largest spurious component, excluding DC offset.

Intermodulation Distortion (IMD)

The two-tone IMD is the ratio expressed in decibels of either input tone to the worst 3rd-order (or higher) intermodulation products. The individual input tone levels backed off by 6.5dB from full scale.

Table 2. Pin-Compatible Versions

PART	RESOLUTION (BITS)	SPEED GRADE (Msps)	OUTPUT BUS
MAX1190	10	120	Full-Duplex
MAX1180	10	105	Full-Duplex
MAX1181	10	80	Full-Duplex
MAX1182	10	65	Full-Duplex
MAX1183	10	40	Full-Duplex
MAX1186	10	40	Half-Duplex
MAX1184	10	20	Full-Duplex
MAX1185	10	20	Half-Duplex
MAX1198	8	100	Full-Duplex
MAX1197	8	60	Full-Duplex
MAX1196	8	40	Half-Duplex
MAX1195	8	40	Full-Duplex

Functional Diagram

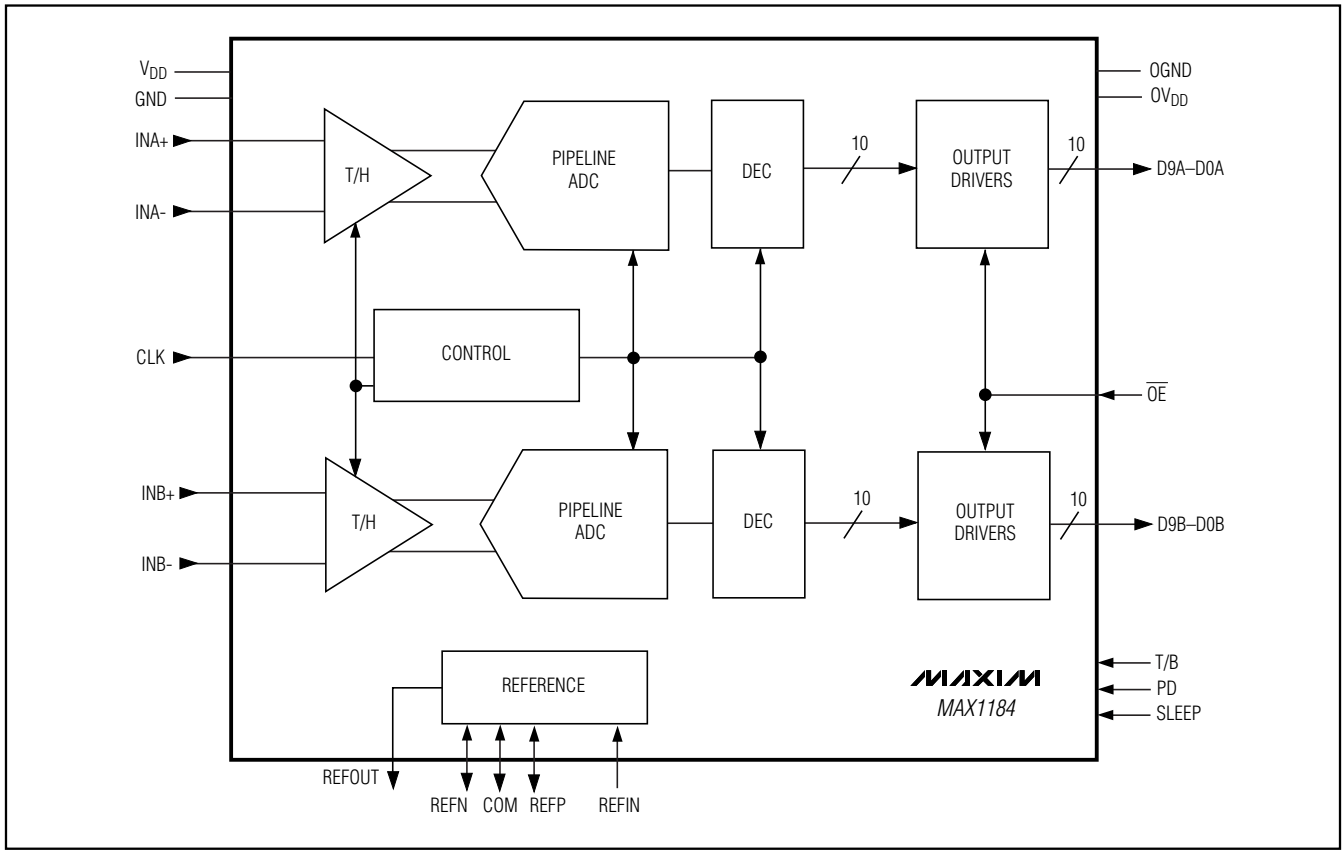

Dual 10-Bit, 20Msps, 3V, Low-Power ADC with Internal Reference and Parallel Outputs

Package Information

(The package drawing(s) in this data sheet may not reflect the most current specifications. For the latest package outline information go to **www.maxim-ic.com/packages**.)

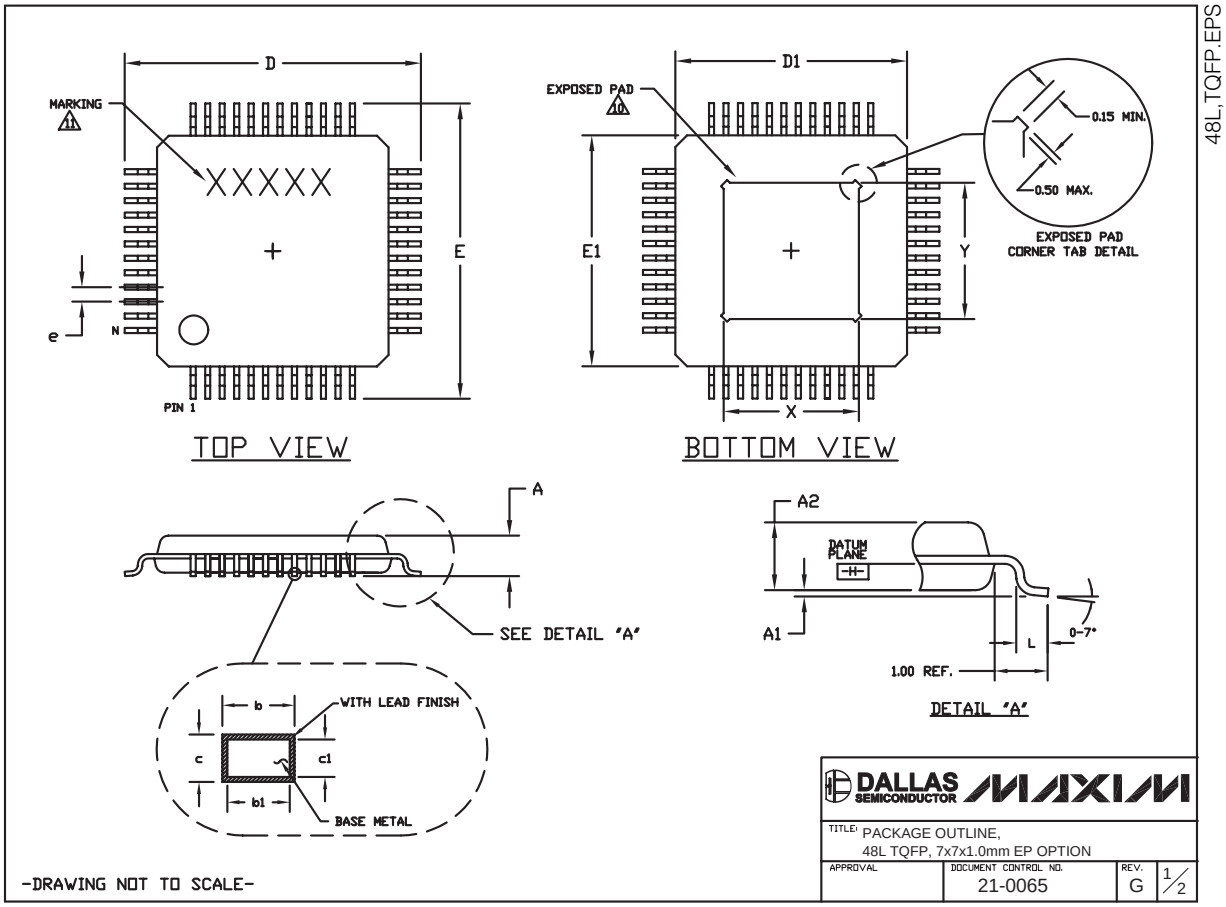

Dual 10-Bit, 20Msps, 3V, Low-Power ADC with Internal Reference and Parallel Outputs

Package Information (continued)

(The package drawing(s) in this data sheet may not reflect the most current specifications. For the latest package outline information go to **www.maxim-ic.com/packages**.)

NOTES:
1. ALL DIMENSIONS AND TOLERANCING CONFORM TO ANSI Y14.5-1982.
2. DATUM PLANE [-H-] IS LOCATED AT MOLD PARTING LINE AND COINCIDENT WITH LEAD, WHERE LEAD EXITS PLASTIC BODY AT BOTTOM OF PARTING LINE.
3. DIMENSIONS D1 AND E1 DO NOT INCLUDE MOLD PROTRUSION. ALLOWABLE MOLD PROTRUSION IS 0.25 MM ON D1 AND E1 DIMENSIONS.
4. THE TOP OF PACKAGE IS SMALLER THAN THE BOTTOM OF PACKAGE BY 0.15 MILLIMETERS.
5. DIMENSION b DOES NOT INCLUDE DAMBAR PROTRUSION. ALLOWABLE DAMBAR PROTRUSION SHALL BE 0.08 MM TOTAL IN EXCESS OF THE b DIMENSION AT MAXIMUM MATERIAL CONDITION.
6. ALL DIMENSIONS ARE IN MILLIMETERS.
7. THIS OUTLINE CONFORMS TO JEDEC PUBLICATION 95 REGISTRATION MS-026, VARIATION ABA-HD.
8. LEADS SHALL BE COPLANAR WITHIN 0.08 MM.
9. EXPOSED DIE PAD SHALL BE COPLANAR WITH BOTTOM OF PACKAGE WITHIN 2 MILS (.05 MM).
10. DIMENSIONS X & Y APPLY TO EXPOSED PAD (EP) VERSIONS ONLY. SEE INDIVIDUAL PRODUCT DATASHEET TO DETERMINE IF A PRODUCT USES EXPOSED PAD PACKAGE.
11. MARKING IS FOR PACKAGE ORIENTATION REFERENCE ONLY.
12. NUMBER OF LEADS SHOWN ARE FOR REFERENCE ONLY.

SYMBOL	JEDEC VARIATION ABC-HD		
	MIN.	NOM.	MAX.
A			1.20
A_1	0.05	0.10	0.15
A_2	0.95	1.00	1.05
D	8.90	9.00	9.10
D_1	6.90	7.00	7.10
E	8.90	9.00	9.10
E_1	6.90	7.00	7.10
L	0.45	0.60	0.75
N	48		
e	0.50 BSC.		
b	0.17	0.22	0.27
b1	0.17	0.20	0.23
c	0.09	--	0.20
c1	0.09	--	0.16

PKG. CODE	EXPOSED PAD VARIATIONS X MIN.	X NOM.	X MAX.	Y MIN.	Y NOM.	Y MAX.
C48E-7	3.70	4.00	4.30	3.70	4.00	4.30
C48E-8	4.70	5.00	5.30	4.70	5.00	5.30
C48E-10	3.70	4.00	4.30	3.70	4.00	4.30

-DRAWING NOT TO SCALE-

DALLAS SEMICONDUCTOR MAXIM

TITLE: PACKAGE OUTLINE, 48L TQFP, 7x7x1.0mm EP OPTION

APPROVAL	DOCUMENT CONTROL NO.	REV.	
	21-0065	G	2/2

Revision History

Pages changed at Rev 1: Title change—all pages, 1–21

Maxim cannot assume responsibility for use of any circuitry other than circuitry entirely embodied in a Maxim product. No circuit patent licenses are implied. Maxim reserves the right to change the circuitry and specifications without notice at any time.

© 2006 Maxim Integrated Products MAXIM is a registered trademark of Maxim Integrated Products, Inc.