MASWSS0157

GaAs SPDT Switch
DC - 2.5 GHz

Rev. V4

Features

- Very Low DC Power Consumption: 100 µW
- Low Insertion Loss: 0.5 dB
- High Isolation: 25 dB up to 2 GHz
- Very High Intercept Point: 45 dBm IP_3
- Nanosecond Switching Speed
- Lead-Free SOIC-8 Package
- 100% Matte Tin Plating over Copper
- Halogen-Free "Green" Mold Compound
- 260°C Reflow Compatible
- RoHS* Compliant Version of the SW-239

Description

The MASWSS0157 is a GaAs MMIC SPDT switch in a lead-free SOIC 8-lead surface mount plastic package. This device is ideally suited for use where low power consumption is required.

Typical applications include transmit/receive switching, switch matrices and switched filter banks in systems such as radio and cellular equipment, PCM, GPS, fiber optic modules, and other battery powered radio equipment.

The MASWSS0157 is fabricated using a monolithic GaAs MMIC using a mature 1 micron process. The process features full chip passivation for increased performance and reliability.

Ordering Information [1]

Part Number	Package
MASWSS0157	Bulk Packaging
MASWSS0157TR	1000 piece reel
MASWSS0157TR-3000	3000 piece reel
MASWSS0157SMB	Sample Test Board

1. Reference Application Note M513 for reel size information.

Functional Schematic

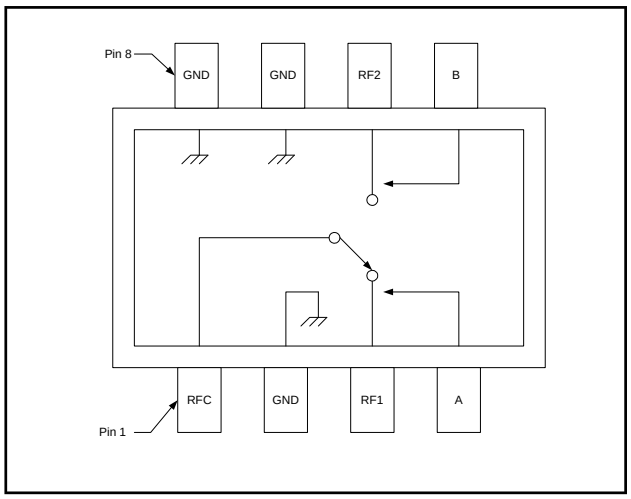

Pin Configuration

Pin No.	Function
1	RF Common
2	Ground
3	RF Port 1
4	Control A
5	Control B
6	RF Port 2
7	Ground
8	Ground

* Restrictions on Hazardous Substances, European Union Directive 2002/95/EC.

ADVANCED: Data Sheets contain information regarding a product M/A-COM Technology Solutions is considering for development. Performance is based on target specifications, simulated results, and/or prototype measurements. Commitment to develop is not guaranteed.
PRELIMINARY: Data Sheets contain information regarding a product M/A-COM Technology Solutions has under development. Performance is based on engineering tests. Specifications are typical. Mechanical outline has been fixed. Engineering samples and/or test data may be available. Commitment to produce in volume is not guaranteed.

• **North America** Tel: 800.366.2266 • **Europe** Tel: +353.21.244.6400
• **India** Tel: +91.80.43537383 • **China** Tel: +86.21.2407.1588
Visit www.macomtech.com for additional data sheets and product information.

M/A-COM Technology Solutions Inc. and its affiliates reserve the right to make changes to the product(s) or information contained herein without notice.

Electrical Specifications: T_A = 25°C, Vc = 0 V / -5 V, Z_0 = 50 Ω [2]

Parameter	Test Conditions	Units	Min.	Typ.	Max.
Insertion Loss	DC - 0.1 GHz DC - 0.5 GHz DC - 1.0 GHz DC - 2.0 GHz	dB	— — — —	0.4 0.4 0.5 0.6	— — 0.8 —
Isolation	DC - 0.1 GHz DC - 0.5 GHz DC - 1.0 GHz DC - 2.0 GHz	dB	— — 30 —	56 43 33 24	— — — —
VSWR	DC - 2.0 GHz	Ratio	—	1.4:1	—
Trise, Tfall	10% to 90% RF, 90% to 10% RF	ns	—	2	—
Ton, Toff	50% Control to 90% RF, 50% Control to 10% RF	ns	—	4	—
Transients	In-Band	mV	—	15	—
1 dB Compression Point	Input Power, 0.05 GHz Input Power, 0.5 - 2.0 GHz	dBm	— —	21 27	— —
2nd Order Intercept	Measured Relative to Input Power (for two-tone input power up to +6 dBm) 0.05 GHz 0.5 - 2.0 GHz	dBm	— —	55 68	— —
3rd Order Intercept	Measured Relative to Input Power (for two-tone input power up to +6 dBm) 0.05 GHz 0.5 - 2.0 GHz	dBm	— —	40 45	— —
Control Current	½Vc½ = 5 V	µA	—	20	25

2. For positive voltage control, external DC blocking capacitors are required on all RF ports as well as the Ground ports which should be pulled up to the positive voltage control level. (Refer to Application Note M521 - "Positive Voltage Control of GaAs MMIC Control Devices").

Absolute Maximum Ratings [3,4]

Parameter	Absolute Maximum
Input Power 0.05 GHz 0.5 - 2.0 GHz	 +27 dBm +34 dBm
Control Voltage	-8.5 V ≤ Vc ≤ +5 V
Operating Temperature	-40°C to +85°C
Storage Temperature	-65°C to +150°C

3. Exceeding any one or combination of these limits may cause permanent damage to this device.
4. M/A-COM does not recommend sustained operation near these survivability limits.

Truth Table [5]

Control Inputs		Condition of Switch RF Common to each RF Port	
A	B	RF1	RF2
1	0	On	Off
0	1	Off	On

5. 0 = 0 V to -0.2 V, 1 = -5 V to -8 V

ADVANCED: Data Sheets contain information regarding a product M/A-COM Technology Solutions is considering for development. Performance is based on target specifications, simulated results, and/or prototype measurements. Commitment to develop is not guaranteed.
PRELIMINARY: Data Sheets contain information regarding a product M/A-COM Technology Solutions has under development. Performance is based on engineering tests. Specifications are typical. Mechanical outline has been fixed. Engineering samples and/or test data may be available. Commitment to produce in volume is not guaranteed.

• **North America** Tel: 800.366.2266 • **Europe** Tel: +353.21.244.6400
• **India** Tel: +91.80.43537383 • **China** Tel: +86.21.2407.1588
Visit www.macomtech.com for additional data sheets and product information.

M/A-COM Technology Solutions Inc. and its affiliates reserve the right to make changes to the product(s) or information contained herein without notice.

Typical Performance Curves

Insertion Loss

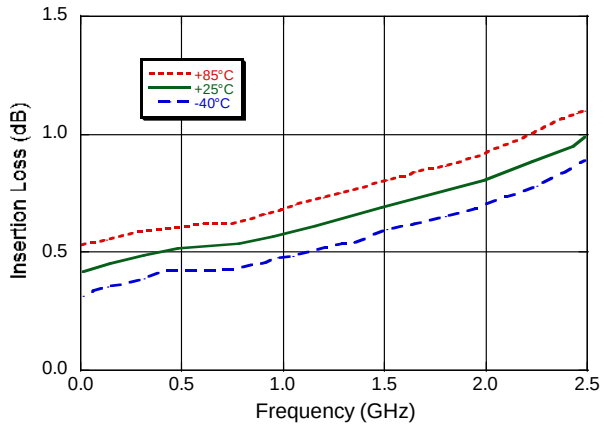

Isolation

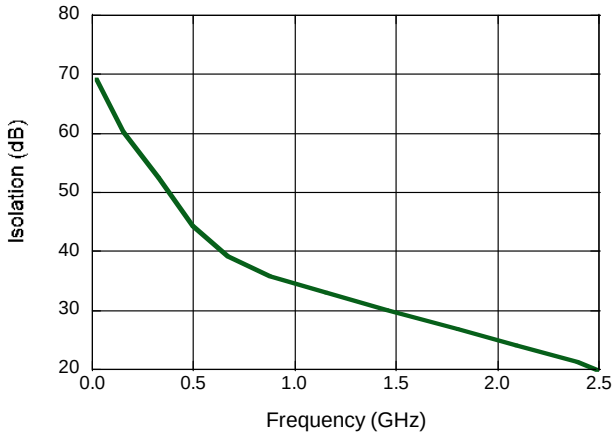

VSWR

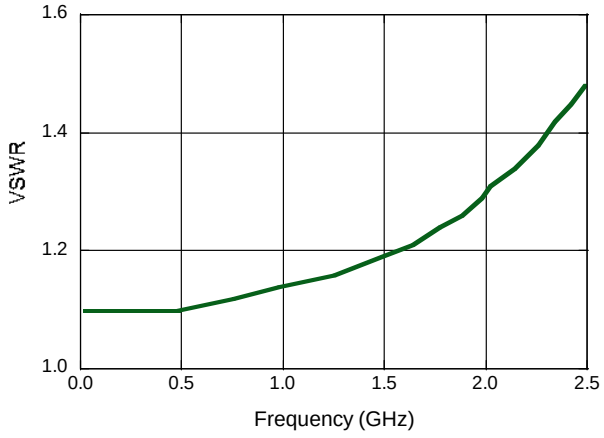

Electrical Schematic

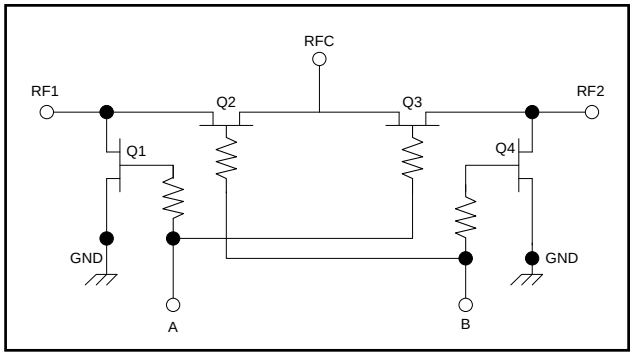

ADVANCED: Data Sheets contain information regarding a product M/A-COM Technology Solutions is considering for development. Performance is based on target specifications, simulated results, and/or prototype measurements. Commitment to develop is not guaranteed.
PRELIMINARY: Data Sheets contain information regarding a product M/A-COM Technology Solutions has under development. Performance is based on engineering tests. Specifications are typical. Mechanical outline has been fixed. Engineering samples and/or test data may be available. Commitment to produce in volume is not guaranteed.

• **North America** Tel: 800.366.2266 • **Europe** Tel: +353.21.244.6400
• **India** Tel: +91.80.43537383 • **China** Tel: +86.21.2407.1588
Visit www.macomtech.com for additional data sheets and product information.

M/A-COM Technology Solutions Inc. and its affiliates reserve the right to make changes to the product(s) or information contained herein without notice.

Lead-Free SOIC-8†

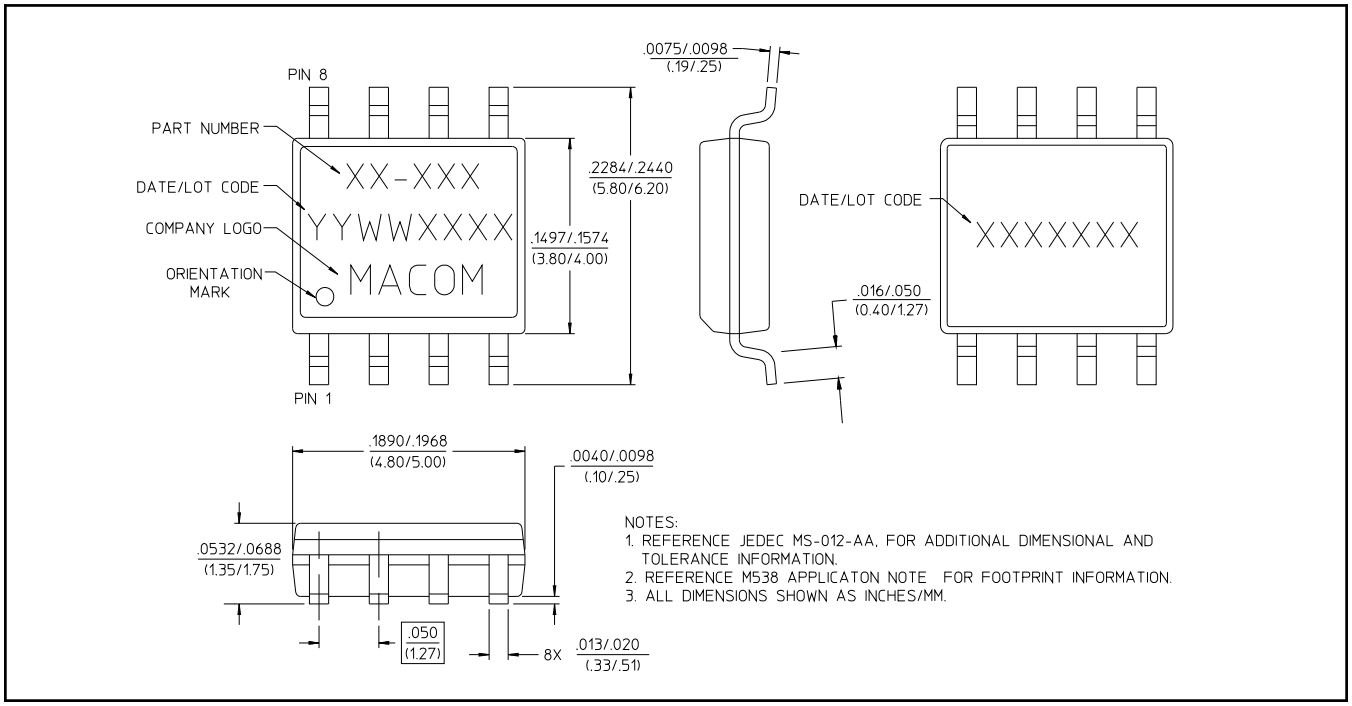

† Reference Application Note M538 for lead-free solder reflow recommendations.

Handling Procedures

Please observe the following precautions to avoid damage:

Static Sensitivity

Gallium Arsenide Integrated Circuits are sensitive to electrostatic discharge (ESD) and can be damaged by static electricity. Proper ESD control techniques should be used when handling these devices.

ADVANCED: Data Sheets contain information regarding a product M/A-COM Technology Solutions is considering for development. Performance is based on target specifications, simulated results, and/or prototype measurements. Commitment to develop is not guaranteed.
PRELIMINARY: Data Sheets contain information regarding a product M/A-COM Technology Solutions has under development. Performance is based on engineering tests. Specifications are typical. Mechanical outline has been fixed. Engineering samples and/or test data may be available. Commitment to produce in volume is not guaranteed.

• **North America** Tel: 800.366.2266 • **Europe** Tel: +353.21.244.6400
• **India** Tel: +91.80.43537383 • **China** Tel: +86.21.2407.1588
Visit www.macomtech.com for additional data sheets and product information.

M/A-COM Technology Solutions Inc. and its affiliates reserve the right to make changes to the product(s) or information contained herein without notice.