MASW-011036

Ka-Band High Power Terminated SPDT PIN Switch 26 - 40 GHz

Rev. V7

Features

- Broadband Performance, 26 to 40 GHz
- Low Loss <1 dB
- High Isolation >38 dB
- Up to 13 W CW Power, +85°C
- Die with G-S-G RF Pads and DC Bias Pads
- Includes DC Blocks and RF Bias Networks
- 23 dBm power handling in terminated port

Description

The MASW-011036 is a high power SPDT with 50 Ω terminated RF ports. This broadband, high linearity, SPDT switch was developed for Ka–Band applications that require up to 13 Watts CW power handling at an environmental temperature of +85°C while maintaining low insertion loss and high isolation.

The SPDT MMIC utilizes MACOM's proven AlGaAs PIN diode technology. The switch is fully passivated with silicon nitride and has an added polymer layer for scratch protection. The protective coating prevents damage to the junction and the anode air-bridge during handling and assembly. The die has backside metallization to facilitate an epoxy die attach process.

Functional Diagram

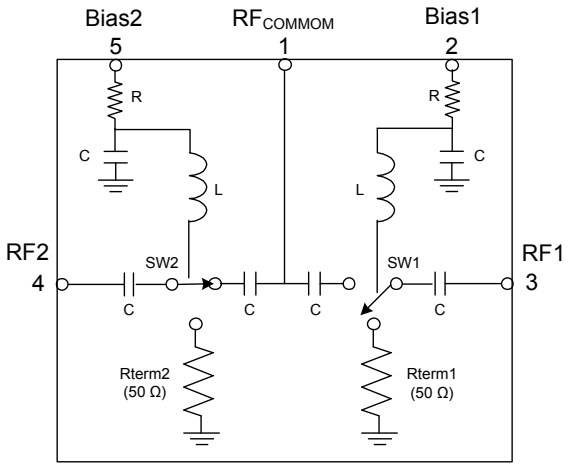

Pin Configuration:

(Back Metal is RF, DC, and Thermal Ground)

Pin #	Function
1	RF$_{COMMON}$
2	BIAS 1
3	RF1
4	RF2
5	BIAS 2

Ordering Information[1]

Part Number	Package
MASW-011036-1413WR	Separated Die on 7" Grip Ring[1], Electronic Map
MASW-011036-1413RI	Separated Die on 7" Grip Ring[1], Inked Wafer
MASW-011036-14130G	Die in Gel Pack[1]
MASW-011036-001SMB	Sample Evaluation Board

1. Die quantity varies.

* Restrictions on Hazardous Substances, European Union Directive 2011/65/EU.

M/A-COM Technology Solutions Inc. (MACOM) and its affiliates reserve the right to make changes to the product(s) or information contained herein without notice.
Visit www.macom.com for additional data sheets and product information.

For further information and support please visit:
https://www.macom.com/support

Electrical Specifications:

Freq. = 28 - 30 GHz, T_A = +25°C, +4 V @ +25 mA / -15 V @ 0 mA, Z_0 = 50 Ω

Parameter	Test Conditions	Units	Min.	Typ.	Max.
Insertion Loss	26 - 28 GHz 28 - 32 GHz 32 - 36 GHz 36 - 40 GHz	dB	—	0.80 0.70 0.70 1.5	— 1.0 — —
Isolation[2]	26 - 28 GHz 28 - 32 GHz 32 - 36 GHz 36 - 40 GHz	dB	— 34 — —	38 40 40 40	—
Input / Output Return Loss On state	26 - 28 GHz 28 - 32 GHz 32 - 36 GHz 36 - 40 GHz	dB	— 13 — —	20 20 20 12	—
RF1, 2 Return Loss, Off state	26 - 28 GHz 28 - 32 GHz 32 - 36 GHz 36 - 40 GHz	dB	— 7.5 — —	8 10 18 18	—
Switching Speed-T_{ON}	50% DC to 90% RF	ns	—	30	—
Switching Speed-T_{OFF}	50% DC to 10% RF	ns	—	21	—
Rise Time -T_{RISE}	10% to 90% RF	ns	—	10	—
Fall Time - T_{FALL}	90% to 10% RF	ns	—	8	—
CW Input Power[3]	-25 V @ +85°C	dBm	—	41.2	—
Reverse Bias Voltage[3]	—	V	-32	-15	-5
Reverse Bias Current[3]	-15 V	nA	—	25	—
Forward Bias Current[4]	+4 V	mA	—	25	—

2. Isolation defined with 1 port in low loss state.
3. Reverse bias voltage should be determined based on working conditions. For example, -25 V @ 41.2 dBm input power. For lower power applications, a less negative voltage can be used. R. Caverly and G. Hiller, “Establishing the Minimum Reverse Bias for a P-I-N Diode in a High Power Switch,” IEEE Transactions on Microwave Theory and Techniques, Vol.38, No.12, December 1990.
4. Forward bias voltage should be determined based on working conditions.

M/A-COM Technology Solutions Inc. (MACOM) and its affiliates reserve the right to make changes to the product(s) or information contained herein without notice.
Visit www.macom.com for additional data sheets and product information.

For further information and support please visit:
https://www.macom.com/support

Absolute Maximum Ratings[5,6]

Parameter	Absolute Maximum
Reverse Bias Voltage	-50 V
Forward Bias Current	40 mA
CW Incident Power	43 dBm
CW Incident Power (Terminated Port)	26 dBm
Operating Temperature	-40°C to +85°C
Storage Temperature	-65°C to +150°C

5. Exceeding any one or combination of these limits may cause permanent damage to this device.
6. M/ACOM does not recommend sustained operation near these survivability limits.

Handling Procedures

Please observe the following precautions to avoid damage:

Static Sensitivity

Gallium Arsenide Integrated Circuits are sensitive to electrostatic discharge (ESD) and can be damaged by static electricity. Proper ESD control techniques should be used when handling these HBM class 1A devices.

Truth Table[3,4]

RF_{COMMOM} Path	Bias 1	Bias 2
RF1 Insertion Loss RF2 Isolation	-15 V (0 mA)	+4 V (+25 mA)
RF2 Insertion Loss RF1 Isolation	+4 V (+25 mA)	-15 V (0 mA)

Die Outline

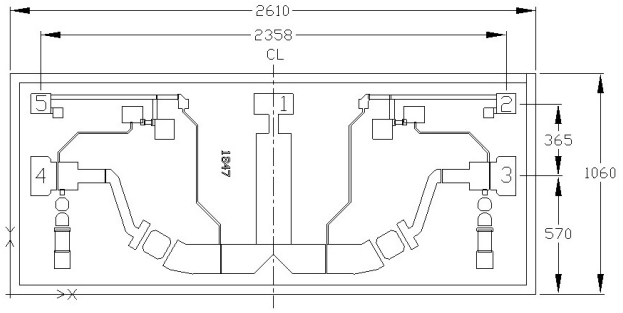

Dimensions indicated in µm.
Die Thickness: 100 µm
RF Pads (1, 3, 4): 100 x 200 µm.
DC Bias Pads (2 & 5): 100 x 100 µm.
Meets JEDEC moisture sensitivity level 1 requirements.

M/A-COM Technology Solutions Inc. (MACOM) and its affiliates reserve the right to make changes to the product(s) or information contained herein without notice.
Visit www.macom.com for additional data sheets and product information.

For further information and support please visit:
https://www.macom.com/support

Typical Performance @ +25°C

Insertion Loss (On State)

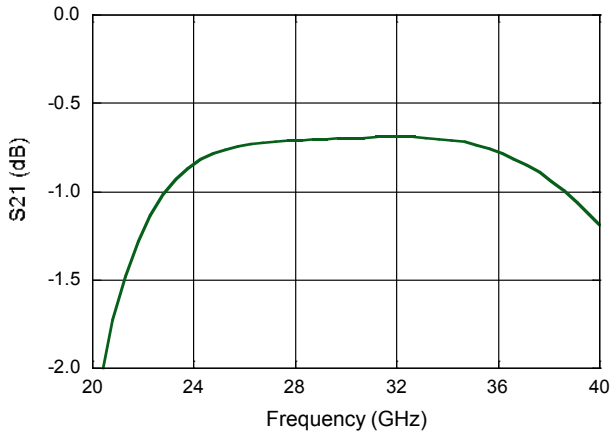

RF_{COMMON} Return Loss (On State)

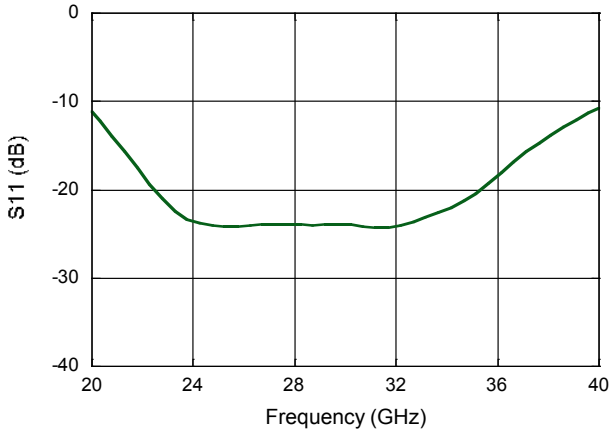

RF1, 2 Return Loss (On State)

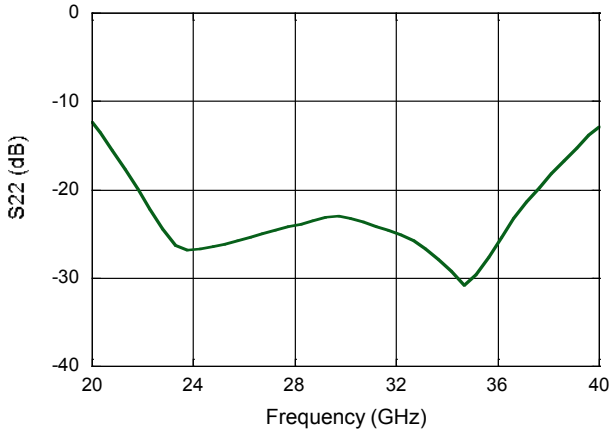

Isolation (Off State)

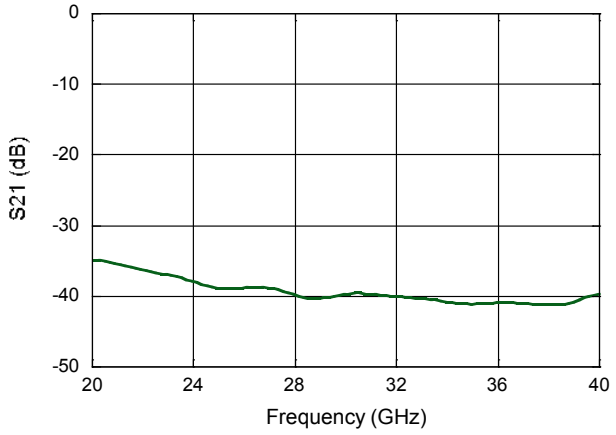

RF1, 2 Return Loss (Off State)

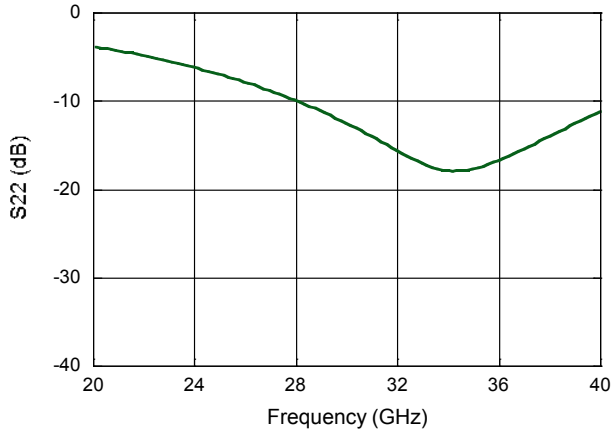

M/A-COM Technology Solutions Inc. (MACOM) and its affiliates reserve the right to make changes to the product(s) or information contained herein without notice.
Visit www.macom.com for additional data sheets and product information.

For further information and support please visit:
https://www.macom.com/support

M/A-COM Technology Solutions Inc. All rights reserved.
Information in this document is provided in connection with M/A-COM Technology Solutions Inc ("MACOM") products. These materials are provided by MACOM as a service to its customers and may be used for informational purposes only. Except as provided in MACOM's Terms and Conditions of Sale for such products or in any separate agreement related to this document, MACOM assumes no liability whatsoever. MACOM assumes no responsibility for errors or omissions in these materials. MACOM may make changes to specifications and product descriptions at any time, without notice. MACOM makes no commitment to update the information and shall have no responsibility whatsoever for conflicts or incompatibilities arising from future changes to its specifications and product descriptions. No license, express or implied, by estoppels or otherwise, to any intellectual property rights is granted by this document.

THESE MATERIALS ARE PROVIDED "AS IS" WITHOUT WARRANTY OF ANY KIND, EITHER EXPRESS OR IMPLIED, RELATING TO SALE AND/OR USE OF MACOM PRODUCTS INCLUDING LIABILITY OR WARRANTIES RELATING TO FITNESS FOR A PARTICULAR PURPOSE, CONSEQUENTIAL OR INCIDENTAL DAMAGES, MERCHANTABILITY, OR INFRINGEMENT OF ANY PATENT, COPYRIGHT OR OTHER INTELLECTUAL PROPERTY RIGHT. MACOM FURTHER DOES NOT WARRANT THE ACCURACY OR COMPLETENESS OF THE INFORMATION, TEXT, GRAPHICS OR OTHER ITEMS CONTAINED WITHIN THESE MATERIALS. MACOM SHALL NOT BE LIABLE FOR ANY SPECIAL, INDIRECT, INCIDENTAL, OR CONSEQUENTIAL DAMAGES, INCLUDING WITHOUT LIMITATION, LOST REVENUES OR LOST PROFITS, WHICH MAY RESULT FROM THE USE OF THESE MATERIALS.

MACOM products are not intended for use in medical, lifesaving or life sustaining applications. MACOM customers using or selling MACOM products for use in such applications do so at their own risk and agree to fully indemnify MACOM for any damages resulting from such improper use or sale.