# MASW-007221

## GaAs SPDT Switch
## DC - 3.0 GHz

Rev. V1

### Features

- Low Insertion Loss: < 0.3 dB @ 900 MHz
- Low Power Consumption: < 15 µA @ -2.3 Volts
- Positive or Negative 2.3 to 8 Volt Control
- Lead-Free SC-70 (SOT-363) Package
- 100% Matte Tin Plating over Copper
- Halogen-Free "Green" Mold Compound
- 260°C Reflow Compatible
- RoHS* Compliant version of SW-456

### Description

M/A-COM's MASW-007221 is a GaAs monolithic switch in a lead-free SC-70 (SOT-363) surface mount plastic package. The MASW-007221 is ideally suited for applications where very low power consumption, low insertion loss, very small size, and low cost are required. Typical applications are in dual band systems where switching between small signal components is required, i.e. filter banks, single-band LNA's, converters, etc.

The MASW-007221 can be used in applications up to 0.25 watts in systems such as cellular, PCS, DCS1800, GSM, CDMA, W-CDMA and other analog / digital wireless communication systems.

The MASW-007221 is fabricated using a mature 0.5 micron PHEMT process. The process features full passivation for performance and reliability.

### Ordering Information [1]

| Part Number | Package |
|---|---|
| MASW-007221-000000 | Bulk Packaging |
| MASW-007221-TR3000 | 3000 piece reel |

1. Reference Application Note M513 for reel size information.

### Functional Schematic: Positive Control Voltage

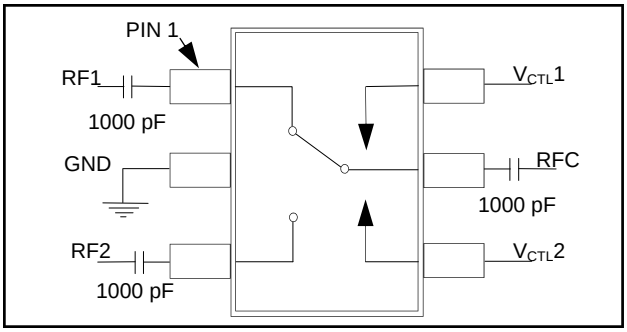


### Functional Schematic: Negative Control Voltage

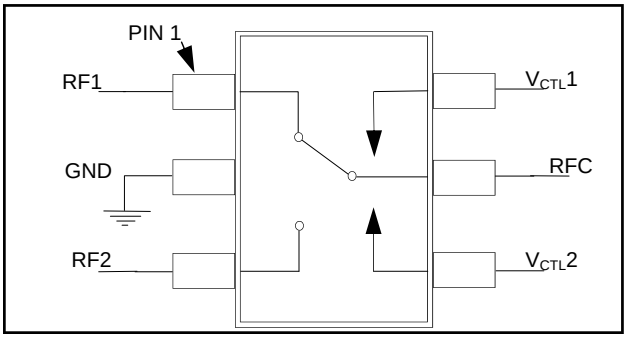


### Pin Configuration

| PIN | Function | Description |
|---|---|---|
| 1 | RF1 | RF In/Out |
| 2 | GND | RF Ground |
| 3 | RF2 | RF In/Out |
| 4 | $V_{CTL}2$ | Voltage Control 2 |
| 5 | RFC | RF Common |
| 6 | $V_{CTL}1$ | Voltage Control 1 |

### Absolute Maximum Ratings [2,3]

| Parameter | Absolute Maximum |
|---|---|
| Input Power (0.5 - 3.0 GHz)<br>3 V Control<br>5 V Control | <br>+30 dBm<br>+33 dBm |
| Operating Voltage | +8.5 volts |
| Operating Temperature | -40°C to +85°C |
| Storage Temperature | -65°C to +150°C |

2. Exceeding any one or combination of these limits may cause permanent damage to this device.
3. M/A-COM does not recommend sustained operation near these survivability limits.

* Restrictions on Hazardous Substances, European Union Directive 2002/95/EC.



**ADVANCED:** Data Sheets contain information regarding a product M/A-COM Technology Solutions is considering for development. Performance is based on target specifications, simulated results, and/or prototype measurements. Commitment to develop is not guaranteed.
**PRELIMINARY:** Data Sheets contain information regarding a product M/A-COM Technology Solutions has under development. Performance is based on engineering tests. Specifications are typical. Mechanical outline has been fixed. Engineering samples and/or test data may be available. Commitment to produce in volume is not guaranteed.

- **North America** Tel: 800.366.2266 / Fax: 978.366.2266
- **Europe** Tel: 44.1908.574.200 / Fax: 44.1908.574.300
- **Asia/Pacific** Tel: 81.44.844.8296 / Fax: 81.44.844.8298

Visit www.macomtech.com for additional data sheets and product information.

*M/A-COM Technology Solutions Inc. and its affiliates reserve the right to make changes to the product(s) or information contained herein without notice.*

## GaAs SPDT Switch
## DC - 3.0 GHz

Rev. V1

### Electrical Specifications: $T_A$ = 25°C, $V_{CTL}$ = 0, -2.3 volts (unless otherwise specified), $Z_0$ = 50

| Parameter | Test Conditions | Units | Min. | Typ. | Max. |
|---|---|---|---|---|---|
| Insertion Loss [5] | DC - 1 GHz<br>1 - 2 GHz<br>2 - 3 GHz | dB<br>dB<br>dB | —<br>—<br>— | 0.35<br>0.45<br>0.56 | 0.5<br>0.6<br>0.8 |
| Isolation | DC - 1 GHz<br>1 - 2 GHz<br>2 - 3 GHz | dB<br>dB<br>dB | 20<br>15<br>10 | 22<br>17<br>12 | —<br>—<br>— |
| $V_{SWR}$ | DC - 3 GHz | Ratio | — | 1.2:1 | 1.4:1 |
| $P_{1dB}$ (2.3V supply) | 500 MHz - 3 GHz | dBm | — | 21 | — |
| $P_{1dB}$ (3V supply) | 500 MHz - 3 GHz | dBm | — | 27 | — |
| Input $IP_2$ | 2-Tone 900 MHz, 5 MHz spacing (3.0 V) | dBm | — | 81 | — |
| Input $IP_3$ | 2-Tone 900 MHz, 5 MHz spacing (3.0 V) | dBm | — | 52 | — |
| Trise, Tfall | 10% to 90% RF, 90% to 10% RF | ns | — | 25 | — |
| Ton, Toff | 50% Control to 90% RF, Control to 10% RF | ns | — | 25 | — |
| Transients | In-Band | mV | — | 25 | — |
| Control Current | $V_{CTL}$ = -2.3 V | µA | — | 4 | 15 |

4. External DC blocking capacitors are required on all RF ports when using positive voltage control.
5. Insertion loss can be optimized by varying the DC blocking capacitor value, e.g. 1000 pF for 100 MHz - 1 GHz, 39 pF for 0.5 GHz - 3 GHz.

### Truth Table

| Mode (Control) | V1 | V2 | RFC - RF1 | RFC - RF2 |
|---|---|---|---|---|
| Positive [6] | 0 ± 0.2 V | +2.3 to +8 V | Off | On |
| | +2.3 to +8 V | 0 ± 0.2 V | On | Off |
| Negative [7] | 0 ± 0.2 V | -2.3 V to -8 V | On | Off |
| | -2.3 V to -8 V | 0 ± 0.2 V | Off | On |

6. External DC blocking capacitors are required on all RF ports. 1000 pF capacitors used for positive control voltage. For higher frequency operation, smaller value DC blocking capacitors can be substituted.
7. If negative control is used, DC blocking capacitors are not required on RF ports.

### Qualification

Qualified to M/A-COM specification REL-201, Process Flow –2.

### Handling Procedures

Please observe the following precautions to avoid damage:

### Static Sensitivity

Gallium Arsenide Integrated Circuits are sensitive to electrostatic discharge (ESD) and can be damaged by static electricity. Proper ESD control techniques should be used when handling these devices.

### *Lead-Free* SC-70 (SOT-363) †

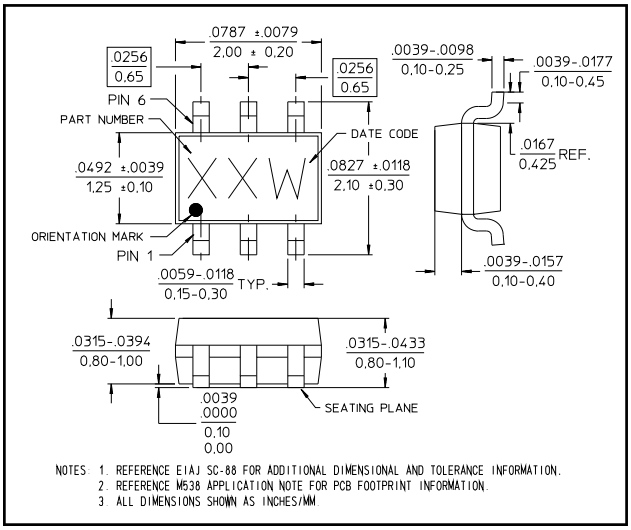


† Reference Application Note M538 for lead-free solder reflow recommendations.



**ADVANCED:** Data Sheets contain information regarding a product M/A-COM Technology Solutions is considering for development. Performance is based on target specifications, simulated results, and/or prototype measurements. Commitment to develop is not guaranteed.
**PRELIMINARY:** Data Sheets contain information regarding a product M/A-COM Technology Solutions has under development. Performance is based on engineering tests. Specifications are typical. Mechanical outline has been fixed. Engineering samples and/or test data may be available. Commitment to produce in volume is not guaranteed.

- **North America** Tel: 800.366.2266 / Fax: 978.366.2266
- **Europe** Tel: 44.1908.574.200 / Fax: 44.1908.574.300
- **Asia/Pacific** Tel: 81.44.844.8296 / Fax: 81.44.844.8298
Visit www.macomtech.com for additional data sheets and product information.

*M/A-COM Technology Solutions Inc. and its affiliates reserve the right to make changes to the product(s) or information contained herein without notice.*

## Typical Performance Curves

***Insertion Loss vs. Frequency Over Temperature***

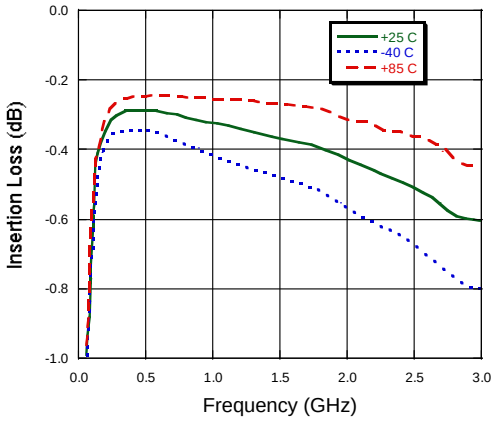


***VSWR Over Temperature***

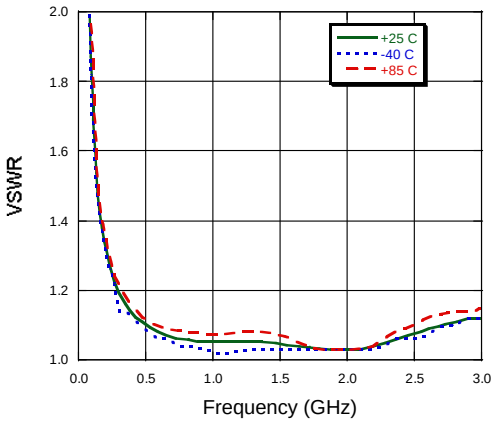


***Isolation vs. Frequency Over Temperature***

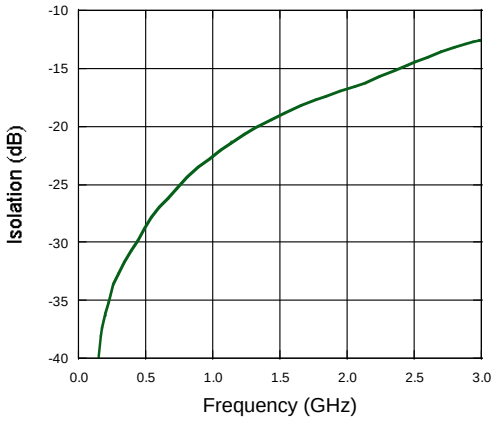


***Insertion Loss vs. Frequency (+2.3 V Control, 1000 pF Capacitor on RF Ports)***

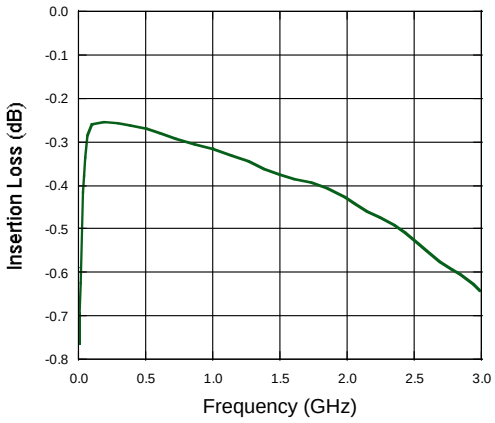


***Isolation vs. Frequency (+2.3 V Control, 1000 pF Capacitor on RF Ports)***

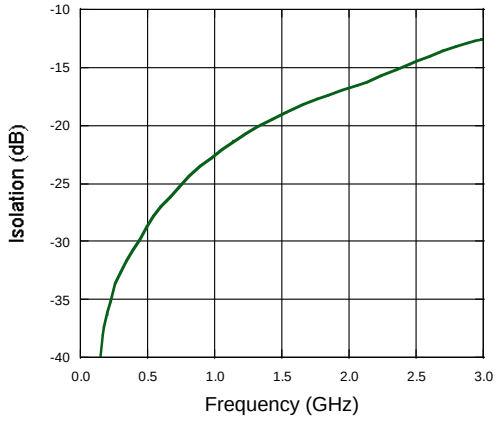


***VSWR vs. Frequency (+2.3 V Control, 1000 pF Capacitor on RF Ports)***

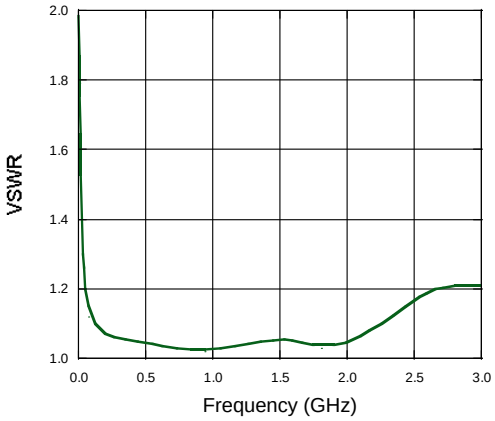




**ADVANCED:** Data Sheets contain information regarding a product M/A-COM Technology Solutions is considering for development. Performance is based on target specifications, simulated results, and/or prototype measurements. Commitment to develop is not guaranteed.
**PRELIMINARY:** Data Sheets contain information regarding a product M/A-COM Technology Solutions has under development. Performance is based on engineering tests. Specifications are typical. Mechanical outline has been fixed. Engineering samples and/or test data may be available. Commitment to produce in volume is not guaranteed.

- **North America** Tel: 800.366.2266 / Fax: 978.366.2266
- **Europe** Tel: 44.1908.574.200 / Fax: 44.1908.574.300
- **Asia/Pacific** Tel: 81.44.844.8296 / Fax: 81.44.844.8298

Visit www.macomtech.com for additional data sheets and product information.

*M/A-COM Technology Solutions Inc. and its affiliates reserve the right to make changes to the product(s) or information contained herein without notice.*