# MASW-003103-1364

## HMIC™ Silicon PIN Diode SP3T Switch
## 50 MHz - 20 GHz

Rev. V2

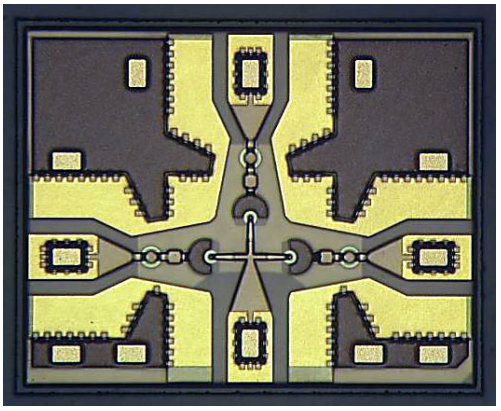

### Features

- Specified from 50 MHz to 20 GHz
- Usable up to 26 GHz
- Low Insertion Loss
- High Isolation
- Low Parasitic Capacitance and Inductance
- RoHS Compliant Surmount™ Package
- Rugged, Fully Monolithic
- Glass Encapsulated Construction
- Up to +38 dBm C.W. Power Handling[1] @ +25°C
- Silicon Nitride Passivation
- Polymer Scratch Protection

### Description

The MASW-003103-1364 is a Surmount™ broadband monolithic SP3T switch using series and shunt connected silicon PIN diodes. This part is designed for use as a moderate signal, high performance switch in applications up to 20 GHz. This Surface Mount chipscale configuration is optimized for broadband performance with minimal associated parasitics usually associated with hybrid MIC designs incorporating beam lead and PIN diodes that require chip and wire assembly.

The MASW-003103-1364 is fabricated using M/A-COM Tech's patented HMIC™ (Heterolithic Microwave Integrated Circuit) process, US Patent 5,268,310. This process allows the incorporation of silicon pedestals that form series and shunt diodes or vias by imbedding them in low loss, low dispersion glass. By using small spacing between elements, this combination of silicon and glass gives HMIC devices low loss and high isolation performance through low millimeter frequencies.

Selective backside metalization is applied producing a Surface Mount device. The topside is fully encapsulated with silicon nitride and has an additional polymer layer for scratch and impact protection. These protective coatings prevent damage to the junction and the anode airbridge during handling and assembly.

1. Power Handling Testing performed @ 2GHz

### Functional Schematic

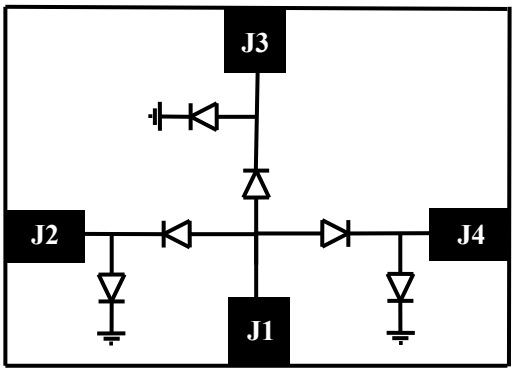


### Pin Configuration [2]

| Pin | Function |
|---|---|
| J1 | RFC |
| J2 | RF1 |
| J3 | RF2 |
| J4 | RF3 |

2. The exposed pad centered on the chip bottom must be con-

### Ordering Information

| Part Number | Package |
|---|---|
| MASW-003103-13640G | 50 piece gel pack |
| MASW-003103-13645P | 500 piece reel |
| MASW-003103-13640P | 3000 piece reel |
| MASW-003103-001SMB | Sample Test Board |



*M/A-COM Technology Solutions Inc. (MACOM) and its affiliates reserve the right to make changes to the product(s) or information contained herein without notice.*
Visit www.macom.com for additional data sheets and product information.

*For further information and support please visit:*
*https://www.macom.com/support*

## HMIC™ Silicon PIN Diode SP3T Switch
## 50 MHz - 20 GHz



### Electrical Specifications: $T_A$ = 25°C, $P_{IN}$ = 0 dBm, $Z_0$ = 50 Ω, 20mA/-10V

| Parameter | Frequency | Units | Min. | Typ. | Max. |
|---|---|---|---|---|---|
| Insertion Loss | 6 GHz<br>13 GHz<br>20 GHz | dB | —<br>—<br>— | 0.50<br>0.8<br>1.2 | 0.6<br>1.1<br>1.4 |
| Isolation | 6 GHz<br>13 GHz<br>20 GHz | dB | 50<br>37<br>25 | 54<br>40<br>31 | —<br>—<br>— |
| Input Return Loss | 6 GHz<br>13 GHz<br>20 GHz | dB | 19<br>14<br>14 | 25<br>22<br>21 | —<br>—<br>— |
| Output to Output Isolation | 6 GHz<br>13 GHz<br>20 GHz | dB | —<br>—<br>— | 57<br>42<br>30 | —<br>—<br>— |
| Switching Speed[3] | — | ns | — | 20 | — |
| Voltage Rating[4] | — | V | — | — | 80 |
| Input 0.1dB Compression Point | 2 GHz | dBm | — | 36 | — |

3. Typical Switching Speed measured fro 10% to 90 % of detected RF signal driven by TTL compatible drivers.
4. Maximum reverse leakage current in either the shunt or series PIN diodes shall be 0.5 uA maximum @ -80 volts.

### Absolute Maximum Ratings [5,6]

| Parameter | Absolute Maximum |
|---|---|
| Operating Temperature | -65 °C to +125 °C |
| Storage Temperature | -65 °C to +150 °C |
| Junction Temperature | +175 °C |
| Applied Reverse Voltage | \|-80 V\| |
| RF CW Incident Power | 38dBm CW @ 2GHz, +25°C<br>33dBm CW @ 20GHz,+25°C |
| Bias Current +25°C | ± 50 mA |

**Max Operating Conditions for combination RF Pwr, DC Bias, & Temp: 33dBm CW @ 20mA per Diode @ +85ºC @ 2GHz**

5. Exceeding any one or combination of these limits may cause permanent damage to this device.
6. M/A-COM Tech does not recommend sustained operation near these survivability limits.

### Handling Procedures

Please observe the following precautions to avoid damage:

### Static Sensitivity

These devices are rated at Class 1A Human Body. Proper ESD control techniques should be used when handling these devices.



*M/A-COM Technology Solutions Inc. (MACOM) and its affiliates reserve the right to make changes to the product(s) or information contained herein without notice.*
Visit www.macom.com for additional data sheets and product information.

*For further information and support please visit:*
*https://www.macom.com/support*

## Typical Performance Curves

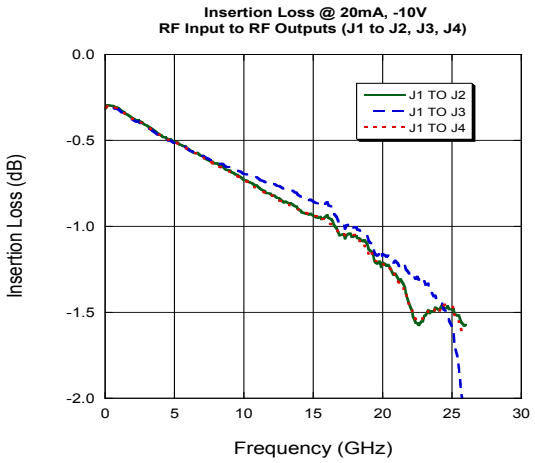


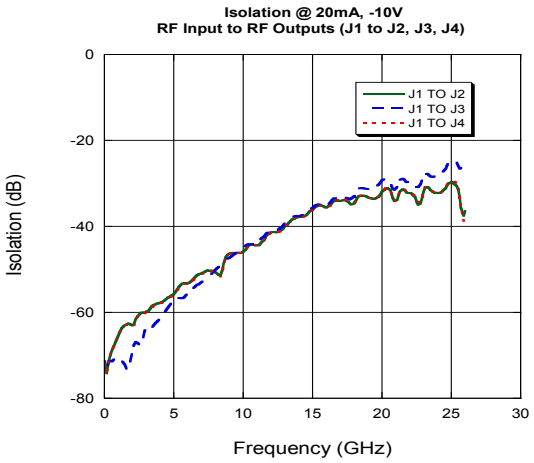


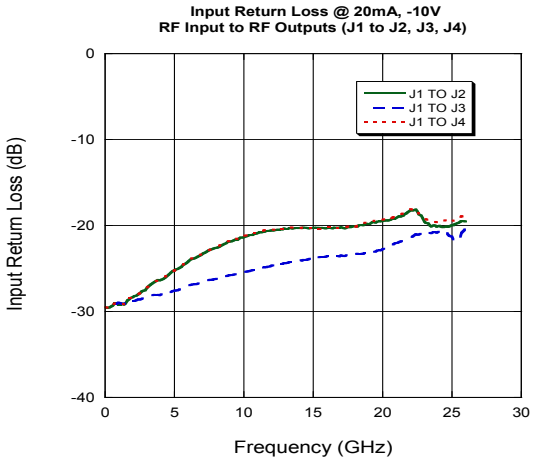


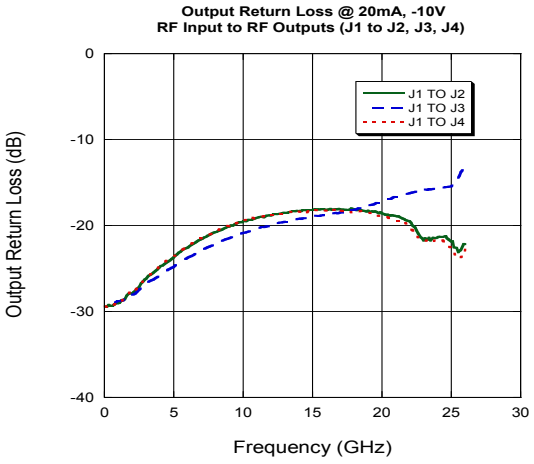


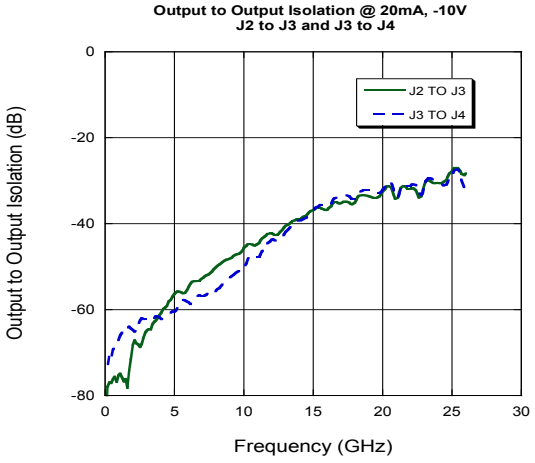


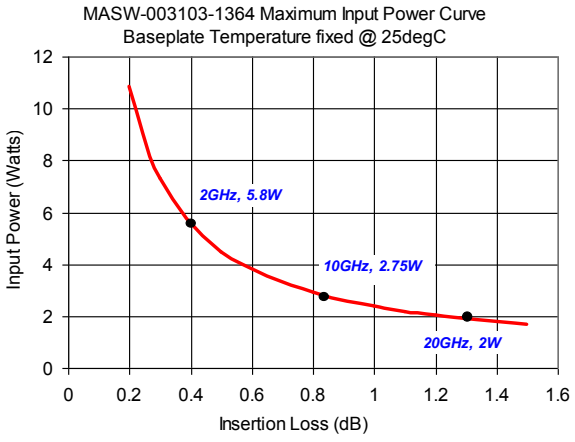




*M/A-COM Technology Solutions Inc. (MACOM) and its affiliates reserve the right to make changes to the product(s) or information contained herein without notice.*
Visit www.macom.com for additional data sheets and product information.

*For further information and support please visit:*
***https://www.macom.com/support***

## Bias Control

Optimal operation of the MASW-003103-1364 is achieved by simultaneous application of negative DC voltage and current to the low loss switching arm J2, J3, or J4, and positive DC voltage and current to the remaining switching arms as shown in the applications circuit below. DC return is achieved via R2 on the J1/RF Com Path.

In the low loss state, the series diode must be forward biased with current and the shunt diode reverse biased with voltage. In the isolation arms, the shunt diode is forward biased with current and the series diode is reverse biased with voltage.

## Driver Connections

| Control Level (DC Currents and Voltages) | | | Condition of RF Output | Condition of RF Output | Condition of RF Output |
|---|---|---|---|---|---|
| B2 | B3 | B4 | J1-J2 | J1-J3 | J1-J4 |
| -15V [7] at -20mA | +20mA | 6V at +20mA | Low Loss | Isolation | Isolation |
| 6V at +20mA | -15V [7] at -20mA | 6V at +20mA | Isolation | Low Loss | Isolation |
| 6V at +20mA | 6V at +20mA | -15V [7] at -20mA | Isolation | Isolation | Low Loss |

7. The voltage applied to the off arm can vary as long as 20mA is applied through the shunt diode on the off arm.

## Application Circuit [8,9,10,11,12]

**Example:**

J1 to J2→ Low Loss
R1 = 250Ω
R2 = 450Ω
B2 = -15V
B3, B4 = 6V

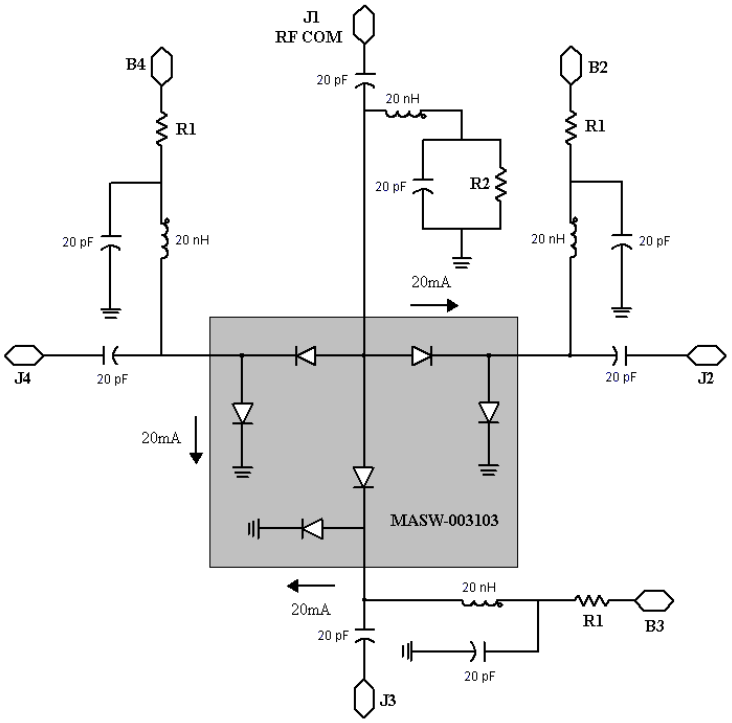


**Notes:**

8. Assume Vf ~ 1V at 20mA
9. R1 = 5V / 0.02A = 250Ω; R2 = 9V / 0.02A = 450Ω
10. $P_{R1}$ = 0.02A x 0.02A x 250 = 0.1 W
11. $P_{R2}$ = 0.02A x 0.02A x 450 = 0.18 W
12. Inductors are bias RF chokes. The operating band width of a broad-band PIN diode switch is often dependent on the bias components, particularly the RF bias chokes. It is suggested that the frequency response be checked with all the bias components attached before installing the PIN diode.



*M/A-COM Technology Solutions Inc. (MACOM) and its affiliates reserve the right to make changes to the product(s) or information contained herein without notice.*
Visit www.macom.com for additional data sheets and product information.

*For further information and support please visit:*
*https://www.macom.com/support*

## Outline Drawing Footprint

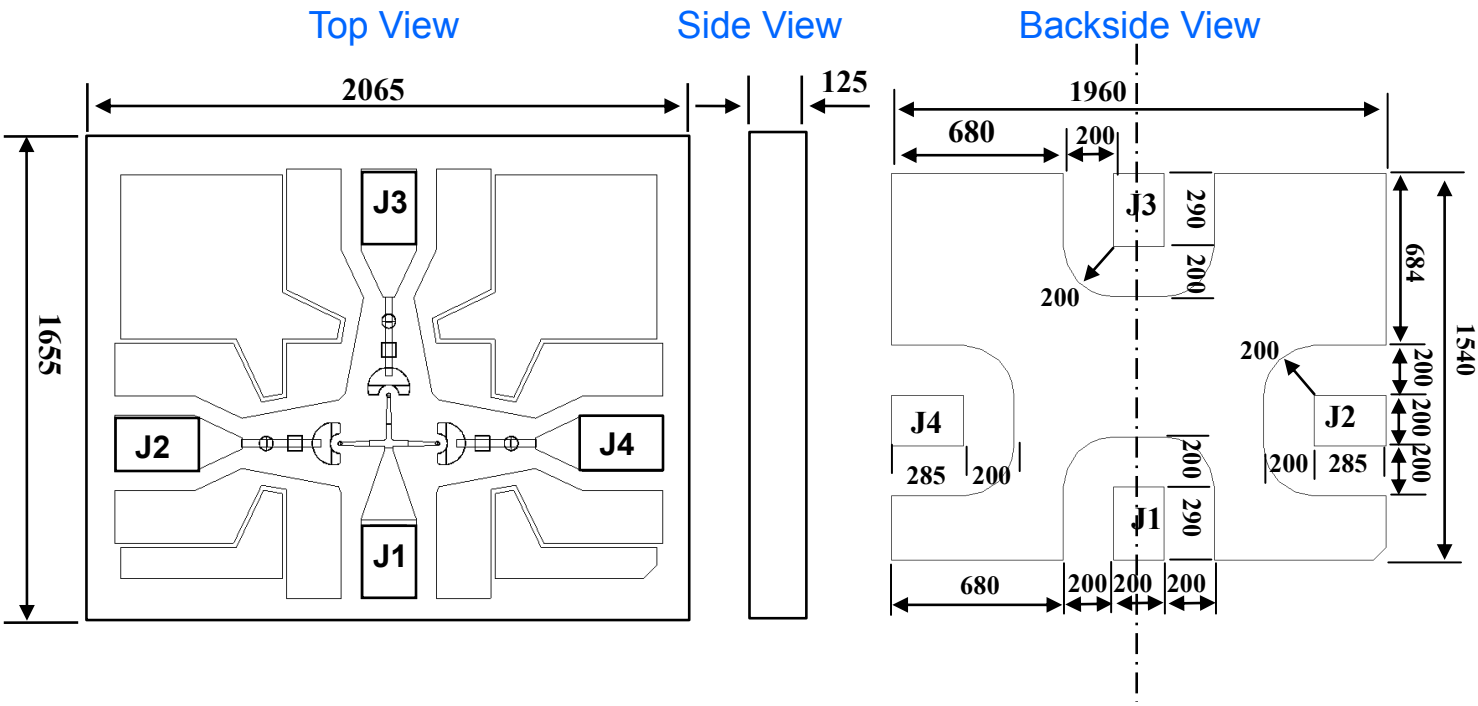


Ground radius is 200um centered on the I/O Pad.

| MASW-003103-1364 | | | | |
|---|---|---|---|---|
| DIM | Inches | | mm | |
| | MIN | MAX | MIN | MAX |
| Width | 0.06417 | 0.06614 | 1.630 | 1.680 |
| Length | 0.08031 | 0.08228 | 2.040 | 2.090 |
| Thickness | 0.00394 | 0.00591 | 0.100 | 0.150 |



*M/A-COM Technology Solutions Inc. (MACOM) and its affiliates reserve the right to make changes to the product(s) or information contained herein without notice.*
Visit www.macom.com for additional data sheets and product information.

*For further information and support please visit:*
*https://www.macom.com/support*

## Handling Procedures

Attachment to a circuit board is made simple through the use of standard surface mount technology. Mounting pads are conveniently located on the bottom surface of these devices and are removed from the active junction locations. These devices are well suited for solder attachment onto hard and soft substrates. The use of 80Au/20Sn, or RoHS compliant solders is recommended. For applications where the average power is ≤ 1W, conductive silver epoxy may also be used. Cure per manufacturers recommended time and temperature. Typically 1 hour at 150°C.

When soldering these devices to a hard substrate, a solder re-flow method is preferred. A vacuum tip pick-up tool and a force of 60 to100 grams applied to the top surface of the device while placing the chip is recommended. When soldering to soft substrates, such as Duroid, it is recommended to use a soft solder at the circuit board to mounting pad interface to minimize stress due to any TCE mismatches that may exist. Position the die so that its mounting pads are aligned with the circuit board mounting pads. Solder reflow should not be performed by causing heat to flow through the top surface of the die to the back. Since the HMIC glass is transparent, the edges of the mounting pads can be visually inspected through the die after attachment is completed.

Typical re-flow profiles for Sn60/Pb40 and RoHS compliant solders is provided in Application Note M538 , “Surface Mounting Instructions“ and can viewed on the MA-COM Technology Solutions website @ www.macomtech.com



*M/A-COM Technology Solutions Inc. (MACOM) and its affiliates reserve the right to make changes to the product(s) or information contained herein without notice.*
Visit www.macom.com for additional data sheets and product information.

*For further information and support please visit:*
***https://www.macom.com/support***

## Pocket Tape Information

### Carrier Tape Dimensions

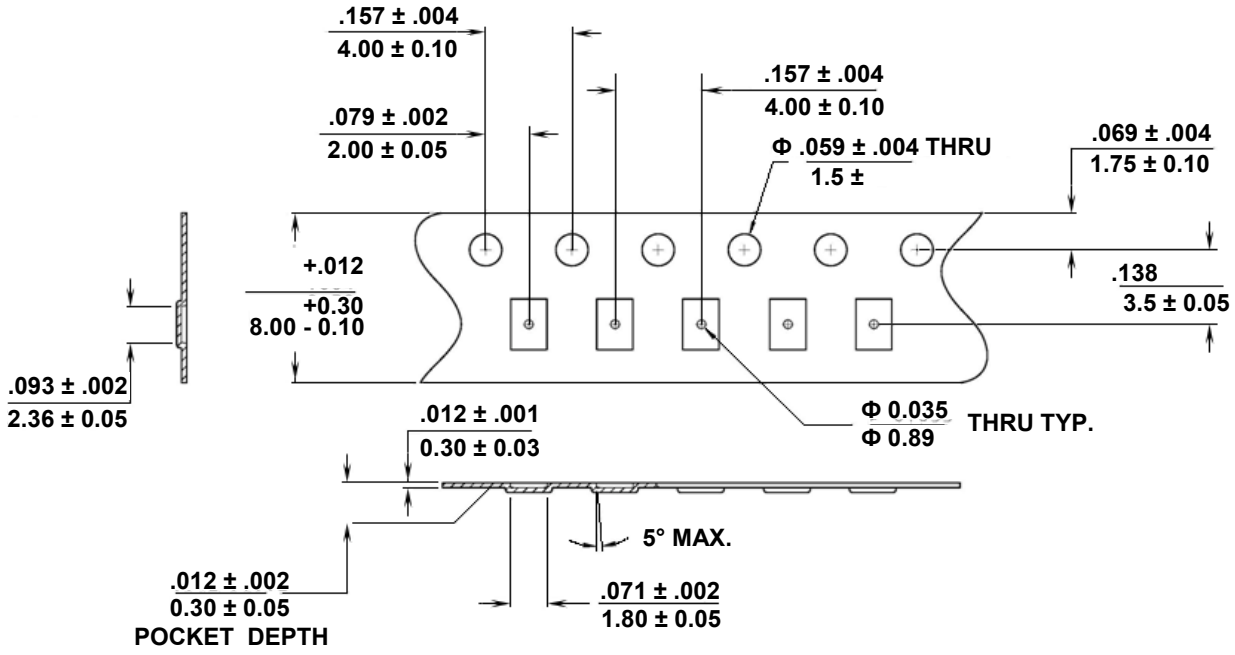


### Chip Orientation in Tape

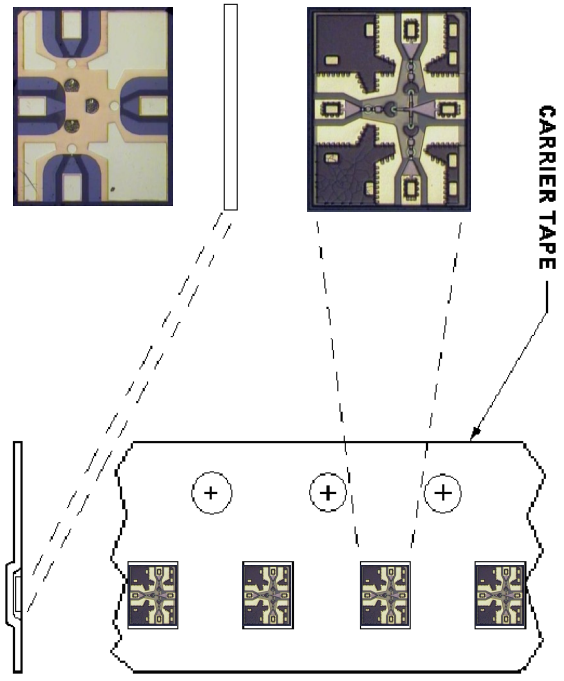




*M/A-COM Technology Solutions Inc. (MACOM) and its affiliates reserve the right to make changes to the product(s) or information contained herein without notice.*
Visit www.macom.com for additional data sheets and product information.

*For further information and support please visit:*
*https://www.macom.com/support*

## Reel Information

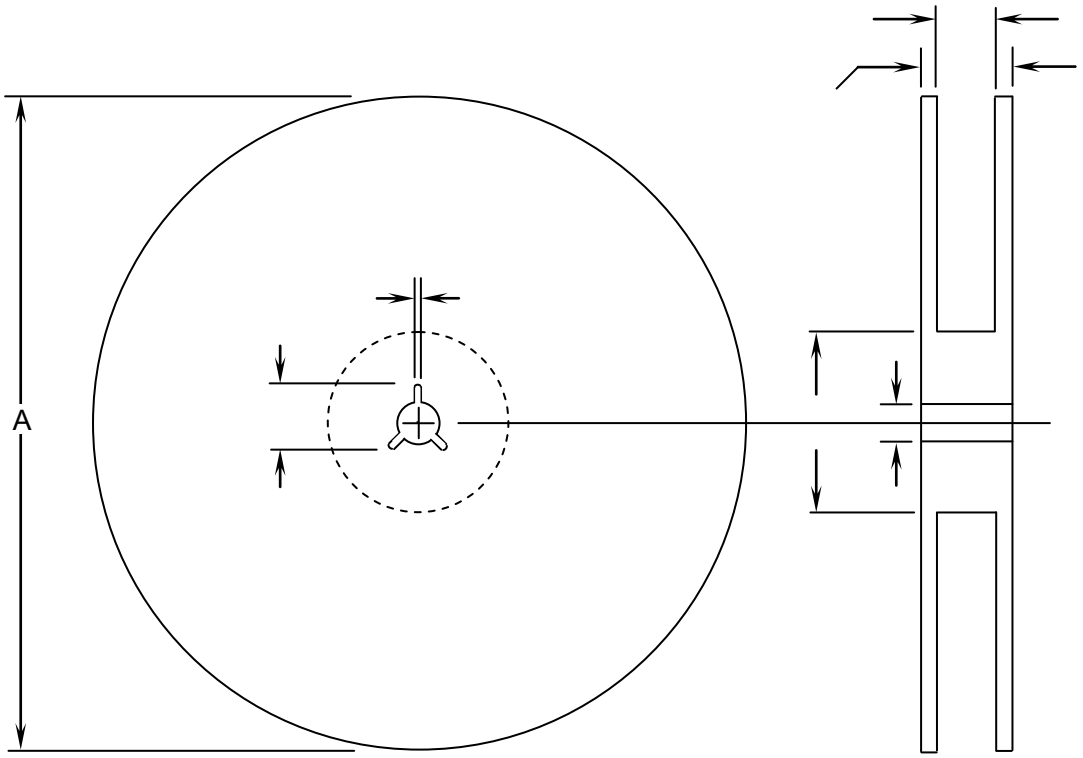


| DIM | INCHES | | MM | |
|---|---|---|---|---|
| | MIN. | MAX. | MIN. | MAX. |
| A | 6.980 | 7.019 | 177.3 | 178.3 |
| B | .059 | .098 | 1.5 | 2.5 |
| C | .504 | .520 | 12.8 | 13.2 |
| D | .795 | .815 | 20.2 | 20.7 |
| N | 2.146 | 2.185 | 54.5 | 55.5 |
| $W_1$ | .331 | .337 | 8.4 | 8.55 |
| $W_2$ | —- | .567 | —- | 14.4 |



*M/A-COM Technology Solutions Inc. (MACOM) and its affiliates reserve the right to make changes to the product(s) or information contained herein without notice.*
Visit www.macom.com for additional data sheets and product information.

*For further information and support please visit:*
***https://www.macom.com/support***

M/A-COM Technology Solutions Inc. All rights reserved.

Information in this document is provided in connection with M/A-COM Technology Solutions Inc ("MACOM") products. These materials are provided by MACOM as a service to its customers and may be used for informational purposes only. Except as provided in MACOM's Terms and Conditions of Sale for such products or in any separate agreement related to this document, MACOM assumes no liability whatsoever. MACOM assumes no responsibility for errors or omissions in these materials. MACOM may make changes to specifications and product descriptions at any time, without notice. MACOM makes no commitment to update the information and shall have no responsibility whatsoever for conflicts or incompatibilities arising from future changes to its specifications and product descriptions. No license, express or implied, by estoppels or otherwise, to any intellectual property rights is granted by this document.

THESE MATERIALS ARE PROVIDED "AS IS" WITHOUT WARRANTY OF ANY KIND, EITHER EXPRESS OR IMPLIED, RELATING TO SALE AND/OR USE OF MACOM PRODUCTS INCLUDING LIABILITY OR WARRANTIES RELATING TO FITNESS FOR A PARTICULAR PURPOSE, CONSEQUENTIAL OR INCIDENTAL DAMAGES, MERCHANTABILITY, OR INFRINGEMENT OF ANY PATENT, COPYRIGHT OR OTHER INTELLECTUAL PROPERTY RIGHT. MACOM FURTHER DOES NOT WARRANT THE ACCURACY OR COMPLETENESS OF THE INFORMATION, TEXT, GRAPHICS OR OTHER ITEMS CONTAINED WITHIN THESE MATERIALS. MACOM SHALL NOT BE LIABLE FOR ANY SPECIAL, INDIRECT, INCIDENTAL, OR CONSEQUENTIAL DAMAGES, INCLUDING WITHOUT LIMITATION, LOST REVENUES OR LOST PROFITS, WHICH MAY RESULT FROM THE USE OF THESE MATERIALS.

MACOM products are not intended for use in medical, lifesaving or life sustaining applications. MACOM customers using or selling MACOM products for use in such applications do so at their own risk and agree to fully indemnify MACOM for any damages resulting from such improper use or sale.



*M/A-COM Technology Solutions Inc. (MACOM) and its affiliates reserve the right to make changes to the product(s) or information contained herein without notice.*
Visit www.macom.com for additional data sheets and product information.

*For further information and support please visit:*
***https://www.macom.com/support***