FAIRCHILD
SEMICONDUCTOR™

0.800-INCH SEVEN SEGMENT DISPLAYS

HIGH EFFICIENCY RED (ORANGE) MAN8600 SERIES

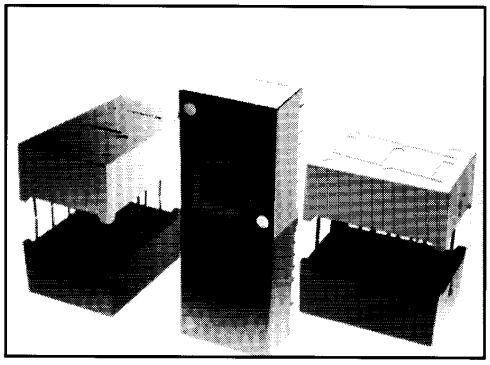

DESCRIPTION

The MAN8600 Series is a family of large digits 0.8-inches in height. This series combines high brightness, large size, good aesthetics and is designed to be used where accurate readable displays need to be viewed over a distance. All models use right hand decimal points. Units are constructed with Grey face and neutral segment color.

FEATURES

- High performance nitrogen-doped GaAsP on GaP
- Large, easy to read, digits
- Common anode or common cathode models
- Fast switching — excellent for multiplexing
- Low power consumption
- Bold solid segments that are highly legible
- Solid state reliability — long operation life
- Rugged plastic construction
- Directly compatible with integrated circuits
- High brightness with high contrast
- Categorized for Luminous Intensity (See Note 6)
- Wide angle viewing...150°
- Low forward voltage
- Grey face for use in high ambient light conditions

APPLICATIONS

For industrial and consumer applications such as:

- Digital readout displays
- Instrument panels
- Point of sale equipment
- Digital clocks
- TV and radios

MODEL NUMBERS

PART NUMBER	COLOR	DESCRIPTION	PACKAGE DRAWING
MAN8610	High Efficiency Red (Orange)	Common Anode; Right Hand Decimal	1
MAN8640	High Efficiency Red (Orange)	Common Cathode; Right Hand Decimal	1

RECOMMENDED FILTERS

For optimum ON and OFF contrast, one of the following filters or equivalents should be used over the display:

Panelgraphic Scarlet 65
Homalite 100-1670

In situations of high ambient light, contrast with the Grey face can be enhanced by using a neutral density filter. The following or an equivalent can be used:

Panelgraphic Grey 10

FAIRCHILD
SEMICONDUCTOR™

0.800-INCH SEVEN SEGMENT DISPLAYS

ELECTRO-OPTICAL CHARACTERISTICS
(25°C Free Air Temperature Unless Otherwise Specified)

	MIN.	TYP.	MAX.	UNITS	TEST CONDITIONS
Luminous Intensity, digit average (See Note 1)	600	2200		μcd	I_F=10 mA
Peak emission wavelength		630		nm	
Spectral line half width		40		nm	
Forward voltage					
Segment			2.5	V	I_F=20 mA
Decimal point			2.5	V	I_F=20 mA
Dynamic resistance					
Segment		26		Ω	I_F=20 mA
Decimal point		26		Ω	I_F=20 mA
Capacitance					
Segment		35		pF	V=0
Decimal point		35		pF	V=0
Reverse current					
Segment			100	μA	V_R=3.0 V
Decimal point			100	μA	V_R=3.0 V
Luminous Intensity Ratio I_L (segment-to-segment)			2:1	—	I_F=10 mA

ABSOLUTE MAXIMUM RATINGS

Power dissipation at 25°C ambient . . . . . 600 mW
Derate linearly from 50°C . . . . . −8.6 mW/°C
Storage and operating temperature . . . . . −40°C to +85°C
Continuous forward current
Total . . . . . 240 mA
Per segment . . . . . 30 mA
Decimal point . . . . . 30 mA
Reverse voltage
Per segment . . . . . 6.0 V
Decimal point . . . . . 6.0 V
Soldering time at 260°C (See Note 4) . . . . . 5 sec.
Peak forward current per segment (I_{max}) (See Figure 4) . . . . . —

TYPICAL THERMAL CHARACTERISTICS

Thermal resistance junction to free air Φ_{JA} . . . . . 160°C/W
Wavelength temperature coefficient (case temperature) . . . . . 1.0Å/°C
Forward voltage temperature coefficient . . . . . −2.0 mV/°C

NOTES

1. *The digit average Luminous Intensity is obtained by summing the Luminous Intensity of each segment and dividing by the total number of segments. Intensity will not vary more than ±33.3% between all segments within a digit.*
2. *The curve in Figure 3 is normalized to the brightness at 25°C to indicate the relative efficiency over the operating temperature range.*
3. *Leads of the device immersed to 1/16 inch from the body. Maximum device surface temperature is 140°C.*
4. *For flux removal, Freon TF, Freon TE, Isoproponal or water may be used up to their boiling points.*
5. *All displays are categorized for Luminous Intensity. The Intensity category is marked on each part as a suffix letter to the part number.*

FAIRCHILD
SEMICONDUCTOR™

0.800-INCH
SEVEN SEGMENT DISPLAYS

PACKAGE DIMENSIONS

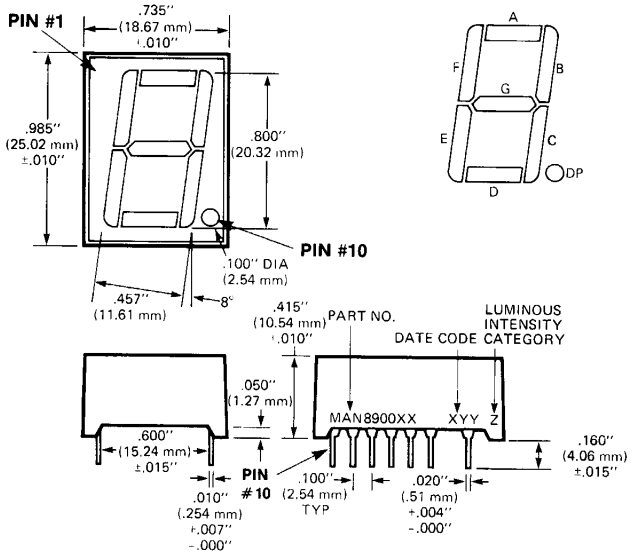

C1370

ELECTRICAL CONNECTIONS

ELECTRICAL CONNECTIONS		
	MAN8610	**MAN8640**
	Digit	Digit
	Common Anode	Common Cathode
PIN #	Package Dimensions	Package Dimensions
1	No Connection	No Connection
2	A Cathode	A Anode
3	F Cathode	F Anode
4	Common Anode	Common Cathode
5	E Cathode	E Anode
6	—	—
7	E Cathode	E Anode
8	—	—
9	D Cathode	Common Cathode
10	DP Cathode	DP Anode
11	D Cathode	D Anode
12	Common Anode	Common Cathode
13	C Cathode	C Anode
14	G Cathode	G Anode
15	B Cathode	B Anode
16	—	—
17	Common Anode	Common Cathode
18	—	—

TYPICAL CHARACTERISTIC CURVES

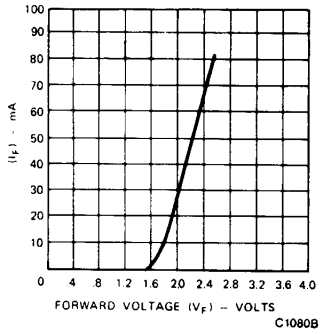

Fig. 1. Forward Current vs. Forward Voltage

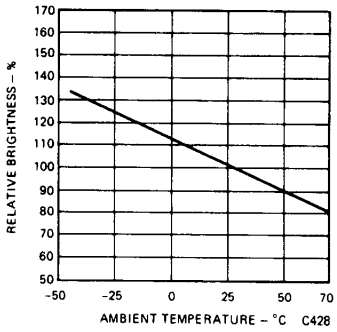

Fig. 2. Luminous Intensity vs. Temperature (See Note 2)

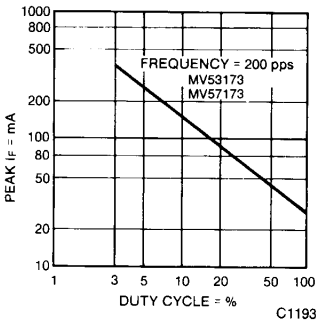

Fig. 3. Max Peak Current vs. Duty Cycle

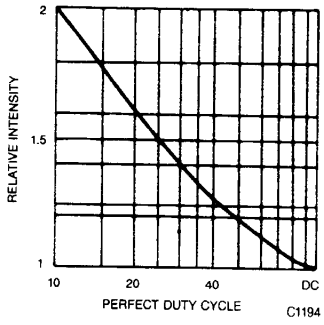

Fig. 4. Luminous Intensity vs. Duty Cycle

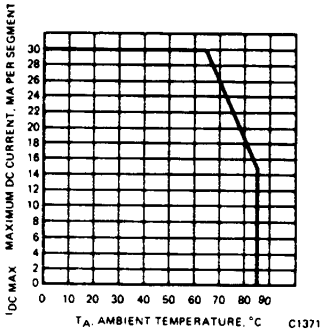

Fig. 5. Maximum DC Current vs. Temperature

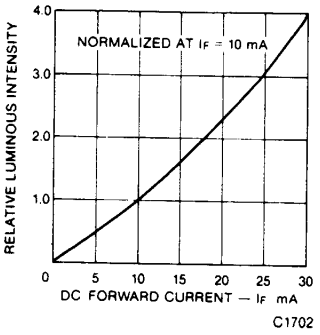

Fig. 6. Relative Luminous Intensity vs. Forward Current

INTERNAL CONNECTIONS

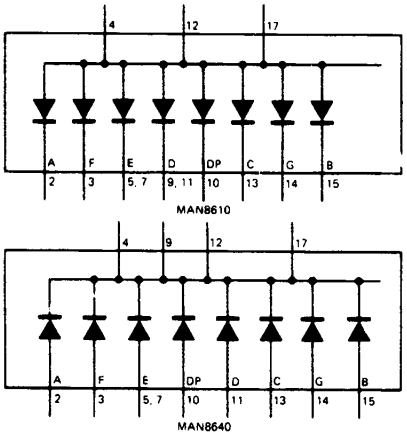

FAIRCHILD
SEMICONDUCTOR™

0.800-INCH
SEVEN SEGMENT DISPLAYS

DISCLAIMER

FAIRCHILD SEMICONDUCTOR RESERVES THE RIGHT TO MAKE CHANGES WITHOUT FURTHER NOTICE TO ANY PRODUCTS HEREIN TO IMPROVE RELIABILITY, FUNCTION OR DESIGN. FAIRCHILD DOES NOT ASSUME ANY LIABILITY ARISING OUT OF THE APPLICATION OR USE OF ANY PRODUCT OR CIRCUIT DESCRIBED HEREIN; NEITHER DOES IT CONVEY ANY LICENSE UNDER ITS PATENT RIGHTS, NOR THE RIGHTS OF OTHERS.

LIFE SUPPORT POLICY

FAIRCHILD'S PRODUCTS ARE NOT AUTHORIZED FOR USE AS CRITICAL COMPONENTS IN LIFE SUPPORT DEVICES OR SYSTEMS WITHOUT THE EXPRESS WRITTEN APPROVAL OF THE PRESIDENT OF FAIRCHILD SEMICONDUCTOR CORPORATION. As used herein:

1. Life support devices or systems are devices or systems which, (a) are intended for surgical implant into the body, or (b) support or sustain life, and (c) whose failure to perform when properly used in accordance with instructions for use provided in the labeling, can be reasonably expected to result in a significant injury of the user.
2. A critical component in any component of a life support device or system whose failure to perform can be reasonably expected to cause the failure of the life support device or system, or to affect its safety or effectiveness.

© 2000 Fairchild Semiconductor Corporation