MADL-011012

360 W CW Power Limiter
0.3 - 1.0 GHz

Rev. V1

Features

- 55.6 dBm CW Power Handling @ +25°C
- 54 dBm CW Power Handling @ +85°C
- 0.2 dB Insertion Loss (400 - 500 MHz)
- 25 dB Return Loss (400 - 500 MHz)
- 21 dBm Flat Leakage Power
- Lead-Free 10.1 x 6.2 x 3.2 mm^3 Package
- RoHS* Compliant
- Hermetic Seal[1]

Description

The MADL-011012 is a lead-free surface mount, high power limiter which integrates the equivalent of 20 PIN, Schottky, limiter diodes, capacitors, inductors, and resistors in a compact ceramic package. This device provides superior low and high signal performance from 0.3 - 1.0 GHz without DC bias.

The MADL-011012 is ideally suitable for higher peak and CW power receiver-protector microwave circuits applications where higher performance surface mount limiter assemblies are required.

Ordering Information

Part Number	Package
MADL-011012-001	bulk
MADL-011012-001SMB	Sample Test Board

1. Hermetic Seal provides fine leak rate < $5x10^{-8}$ atm·cc/s.

Functional Schematic

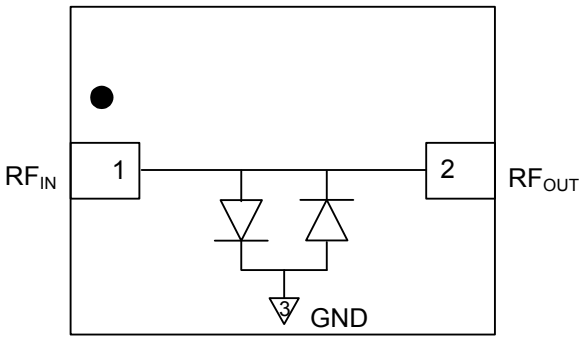

Top view

Pin Configuration

Pin No.	Pin Name	Description
1	RF_{IN}	RF Input
2	RF_{OUT}	RF Output
3	Paddle[2]	Ground

2. The exposed paddle centered on the package bottom must be connected to RF, DC, and thermal ground.

* Restrictions on Hazardous Substances, European Union Directive 2011/65/EU.

M/A-COM Technology Solutions Inc. (MACOM) and its affiliates reserve the right to make changes to the product(s) or information contained herein without notice.
Visit www.macom.com for additional data sheets and product information.

For further information and support please visit:
https://www.macom.com/support

Electrical Specifications: T_A = +25°C, Z_0 = 50 Ω (unless otherwise defined)

Parameter	Test Conditions	Units	Min.	Typ.	Max.
Insertion Loss	-10 dBm, 300 MHz -10 dBm, 500 MHz -10 dBm, 1000 MHz	dB	— — —	0.25 0.20 0.55	— 0.35 —
Return Loss	10 dBm, 300 MHz -10 dBm, 500 MHz -10 dBm, 1000 MHz	dB	— — —	20 25 11	— — —
P1dB Input Compression Power	500 MHz	dBm	—	13	—
CW Incident Power[3]	500 MHz	dBm	—	55.6	—
Peak Incident Power[3]	1 ms pulse, 10% duty cycle, 500 MHz	dBm	—	55.6	—
Flat Leakage Power	1 ms pulse, 10% duty cycle, 500 MHz	dBm	—	20	—
Spike Leakage Power	+55.6 dBm, 1 ms pulse, 10% duty cycle, 500 MHz	dBm	—	29	—
Spike Leakage Energy	+55.6 dBm, 1 ms pulse, 10% duty cycle, 500 MHz	ergs	—	0.5	—
Recovery Time (3 dB of Insertion Loss)	+55.6 dBm, 1 ms pulse, 10% duty cycle, 500 MHz	µs	—	3	—
Input 3rd Order Intermodulation (IIP3)	-10 dBm, F1 = 500 MHz, F2 = 510 MHz	dBm	—	29	—

3. Incident power ratings defined with 1.2:1 source VSWR and 1.2:1 maximum load VSWR.

Absolute Maximum Ratings[4,5]

Parameter	Absolute Maximum
Peak Incident Power 2 ms pulse, 10% duty @ +85°C	55.6 dBm
CW Incident Power @ +85°C	54 dBm
Junction Temperature[6]	175°C
Operating Temperature	-65°C to +125°C
Storage Temperature	-65°C to +150°C

4. Exceeding any one or combination of these limits may cause permanent damage to this device.
5. MACOM does not recommend sustained operation near these survivability limits.
6. Operating at nominal conditions with $T_J \leq$ +175°C will ensure MTTF > 1 x 10^6 hours.

Typical Performance Curve

Pulse Width vs. Peak Input Power @ +85°C
(10% Duty Cycle, 500 MHz)

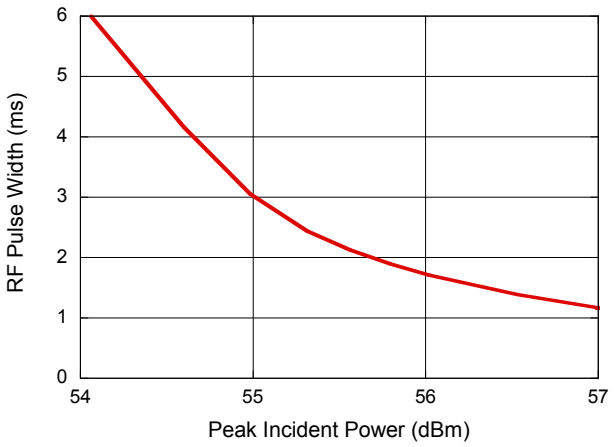

M/A-COM Technology Solutions Inc. (MACOM) and its affiliates reserve the right to make changes to the product(s) or information contained herein without notice.
Visit www.macom.com for additional data sheets and product information.

For further information and support please visit:
https://www.macom.com/support

Typical Performance Curves

Insertion Loss vs. Frequency

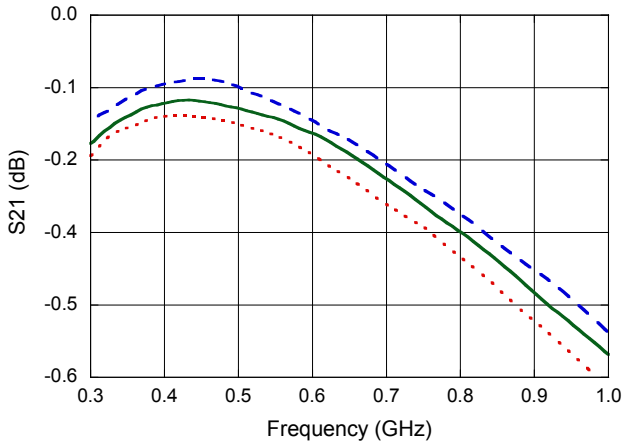

Input Return Loss vs. Frequency

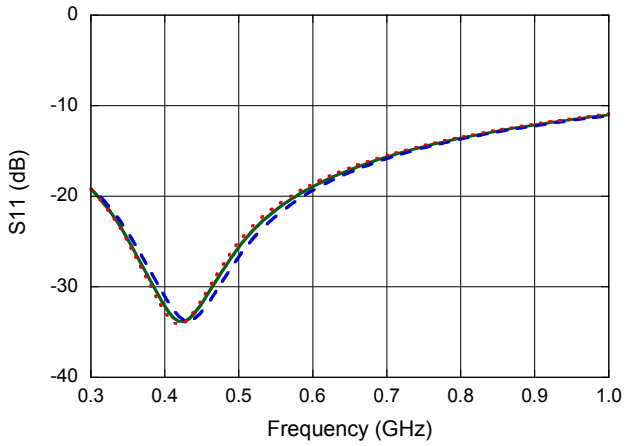

Pulsed Flat Leakage Power vs. P_{IN}
(1 ms Pulse, 10% Duty Cycle, 500 MHz)

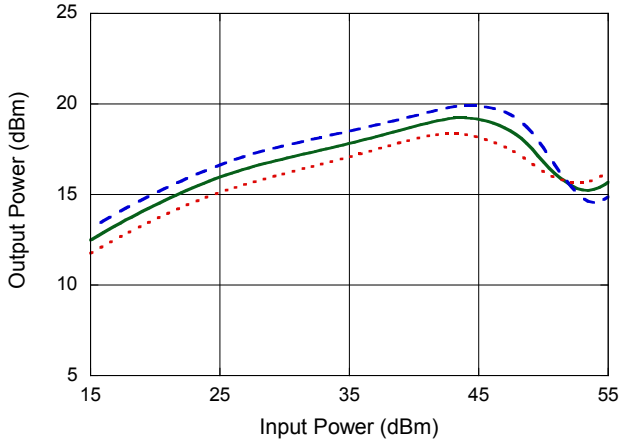

CW Flat Leakage Power vs. P_{IN} @ 500 MHz

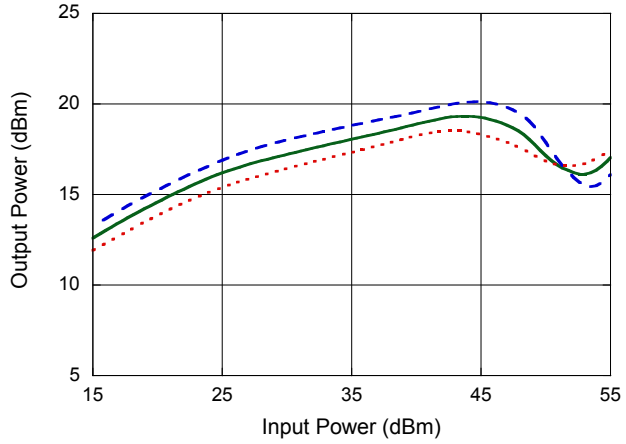

Pulsed Spike Leakage Power vs. P_{IN}
(1 ms Pulse, 10% Duty Cycle, 500 MHz)

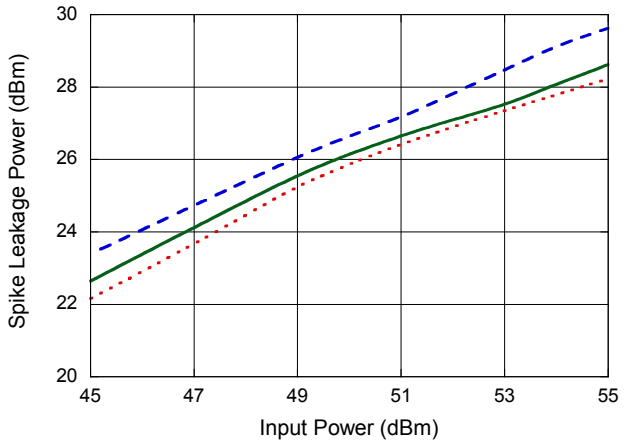

Pulsed 1 dB Recovery Time vs. P_{IN}
(1 ms Pulse, 10% Duty Cycle, 500 MHz)

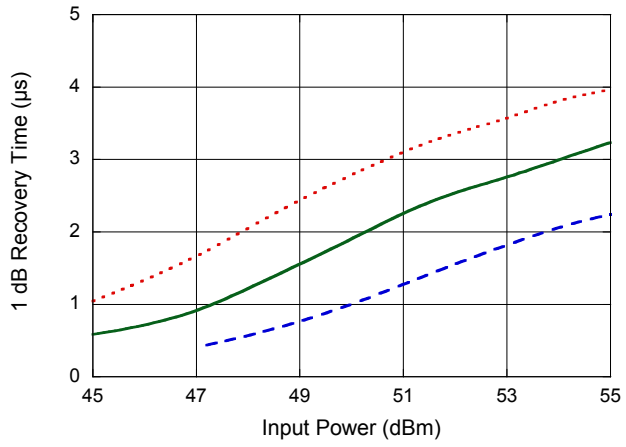

M/A-COM Technology Solutions Inc. (MACOM) and its affiliates reserve the right to make changes to the product(s) or information contained herein without notice.
Visit www.macom.com for additional data sheets and product information.

For further information and support please visit:
https://www.macom.com/support

SMB Layout

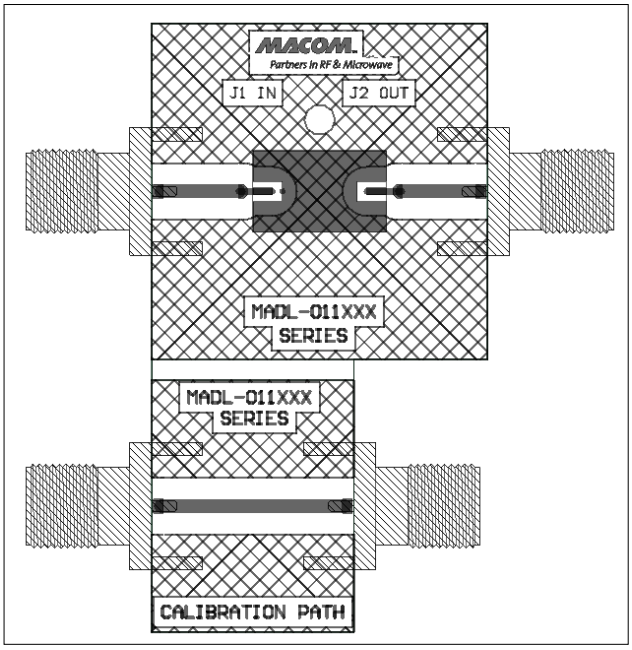

SMB Layout

Part	Quantity	Part Number
RF Connector	2	Johnson 142-0701-851
Limiter	1	MADL-011012

Handling Procedures

Please observe the following precautions to avoid damage:

Static Sensitivity

These devices are sensitive to electrostatic discharge (ESD) and can be damaged by static electricity. Proper ESD control techniques should be used when handling these HBM Class 1B devices.

Lead-Free 10.1 x 6.2 x 3.2 mm^3 2-Lead package†

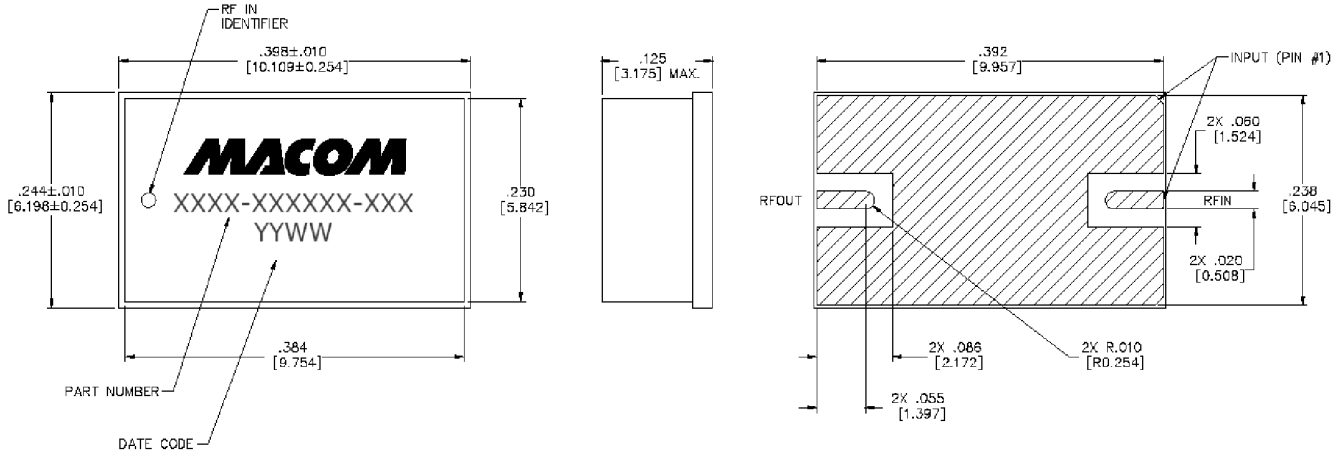

NOTES:
REFERENCE JEDEC MO-153-AB FOR ADDITIONAL DIMENSIONAL AND TOLERANCE INFORMATION.
ALL DIMENSIONS SHOWN AS INCHES/MM.

† Reference Application Note S2083 for lead-free solder reflow recommendations.
Plating is Au over Ni over Cu.

M/A-COM Technology Solutions Inc. (MACOM) and its affiliates reserve the right to make changes to the product(s) or information contained herein without notice.
Visit www.macom.com for additional data sheets and product information.

For further information and support please visit:
https://www.macom.com/support

Application Section

Transmit-Receive Block Diagram using the UHF Band MADL-011012 Limiter

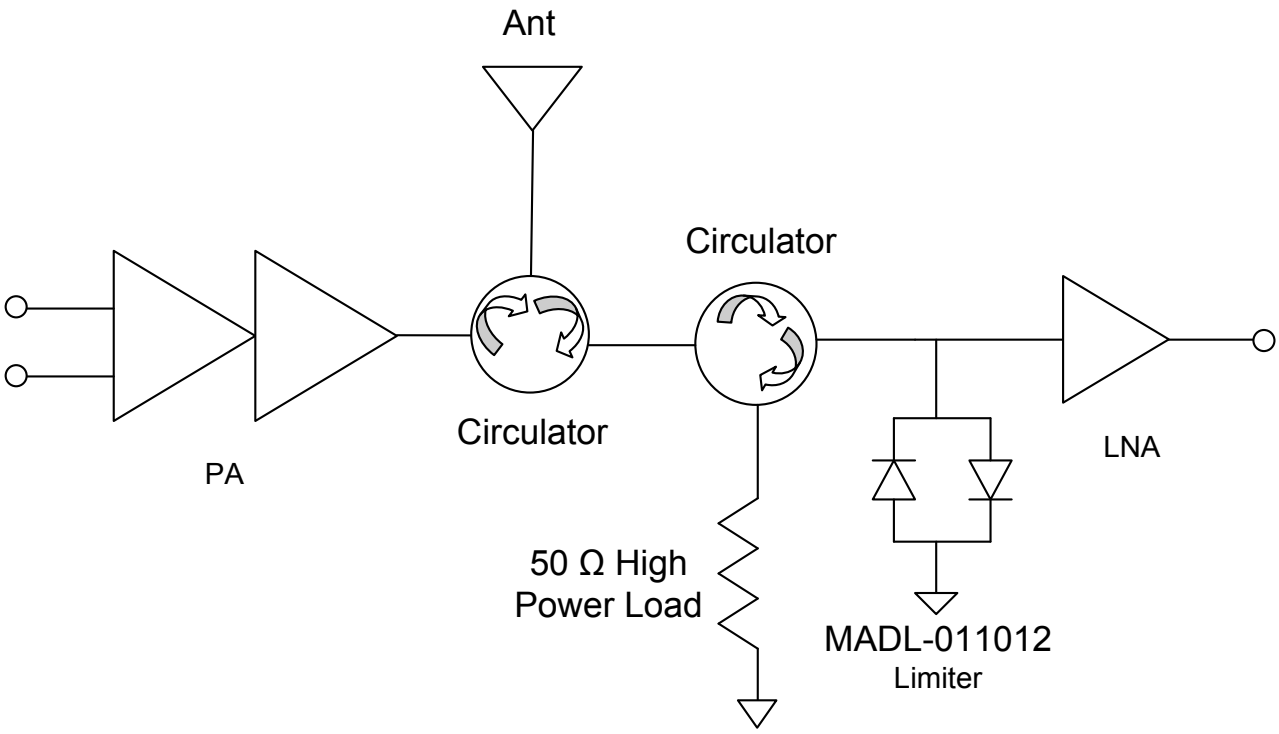

M/A-COM Technology Solutions Inc. (MACOM) and its affiliates reserve the right to make changes to the product(s) or information contained herein without notice.
Visit www.macom.com for additional data sheets and product information.

For further information and support please visit:
https://www.macom.com/support

M/A-COM Technology Solutions Inc. All rights reserved.
Information in this document is provided in connection with M/A-COM Technology Solutions Inc ("MACOM") products. These materials are provided by MACOM as a service to its customers and may be used for informational purposes only. Except as provided in MACOM's Terms and Conditions of Sale for such products or in any separate agreement related to this document, MACOM assumes no liability whatsoever. MACOM assumes no responsibility for errors or omissions in these materials. MACOM may make changes to specifications and product descriptions at any time, without notice. MACOM makes no commitment to update the information and shall have no responsibility whatsoever for conflicts or incompatibilities arising from future changes to its specifications and product descriptions. No license, express or implied, by estoppels or otherwise, to any intellectual property rights is granted by this document.

THESE MATERIALS ARE PROVIDED "AS IS" WITHOUT WARRANTY OF ANY KIND, EITHER EXPRESS OR IMPLIED, RELATING TO SALE AND/OR USE OF MACOM PRODUCTS INCLUDING LIABILITY OR WARRANTIES RELATING TO FITNESS FOR A PARTICULAR PURPOSE, CONSEQUENTIAL OR INCIDENTAL DAMAGES, MERCHANTABILITY, OR INFRINGEMENT OF ANY PATENT, COPYRIGHT OR OTHER INTELLECTUAL PROPERTY RIGHT. MACOM FURTHER DOES NOT WARRANT THE ACCURACY OR COMPLETENESS OF THE INFORMATION, TEXT, GRAPHICS OR OTHER ITEMS CONTAINED WITHIN THESE MATERIALS. MACOM SHALL NOT BE LIABLE FOR ANY SPECIAL, INDIRECT, INCIDENTAL, OR CONSEQUENTIAL DAMAGES, INCLUDING WITHOUT LIMITATION, LOST REVENUES OR LOST PROFITS, WHICH MAY RESULT FROM THE USE OF THESE MATERIALS.

MACOM products are not intended for use in medical, lifesaving or life sustaining applications. MACOM customers using or selling MACOM products for use in such applications do so at their own risk and agree to fully indemnify MACOM for any damages resulting from such improper use or sale.

M/A-COM Technology Solutions Inc. (MACOM) and its affiliates reserve the right to make changes to the product(s) or information contained herein without notice.
Visit www.macom.com for additional data sheets and product information.

For further information and support please visit:
https://www.macom.com/support