MABA-011009

Transformer, 1:1
3 MHz - 200 MHz

Rev. V2

Features

- 1:1 impedance ratio
- Surface mount
- Available on tape and reel
- 260ºC reflow compatible
- RoHS Compliant and Pb free
- Excellent temperature stability
- Can be used on 50Ω and 75Ω systems
- Suitable for all CATV, Broadband and FTTx applications.

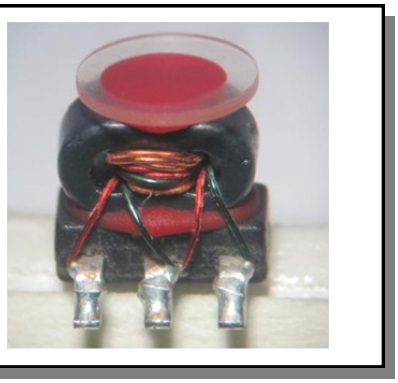

Electrical Specifications: Z_0 = 75Ω, T_A = 25°C, P_{in} = 0dBm

Parameter	Conditions	Units	Min	Typ	Max
Frequency Range		MHz	3		200
Impedance		Ω		75	
Impedance Ratio				1:1	
Insertion Loss Pin 5 - Pin1	3 - 85 MHz 85 - 150 MHz 150 - 200 MHz	dB dB dB	- - -	0.4 0.6 0.7	0.6 0.8 1.0
Insertion Loss Pin 5 - Pin3	3 - 85 MHz 85 - 200 MHz	dB dB	- -	0.4 0.6	0.6 0.8
Amplitude Balance	3 - 200 MHz	dB	-	0.1	±0.35
Phase Balance	3 - 85 MHz 85 - 200 MHz	degree degree	- -	0.6 1.2	±2.0 ±4.0
Input Return Loss	3 - 85 MHz 85 - 150 MHz 150 - 200 MHz	dB dB dB	20 16 14	24 20 18	- - -

Pin Configuration

Pin No.	Function
1	Secondary Dot
2	Secondary centre tap
3	Secondary
4	Primary
5	Primary Dot

Schematic

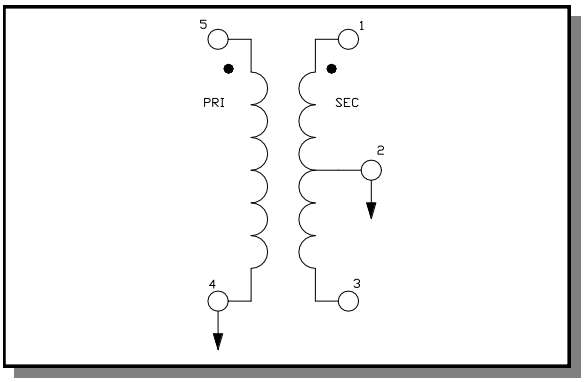

ADVANCED: Data Sheets contain information regarding a product M/A-COM Technology Solutions is considering for development. Performance is based on target specifications, simulated results, and/or prototype measurements. Commitment to develop is not guaranteed.
PRELIMINARY: Data Sheets contain information regarding a product M/A-COM Technology Solutions has under development. Performance is based on engineering tests. Specifications are typical. Mechanical outline has been fixed. Engineering samples and/or test data may be available. Commitment to produce in volume is not guaranteed.

• **North America** Tel: 800.366.2266 • **Europe** Tel: +353.21.244.6400
• **India** Tel: +91.80.43537383 • **China** Tel: +86.21.2407.1588
Visit www.macomtech.com for additional data sheets and product information.

M/A-COM Technology Solutions Inc. and its affiliates reserve the right to make changes to the product(s) or information contained herein without notice.

Electrical Specifications: Z_0 = 75Ω, T_A = 25°C, P_{in} = 0dBm

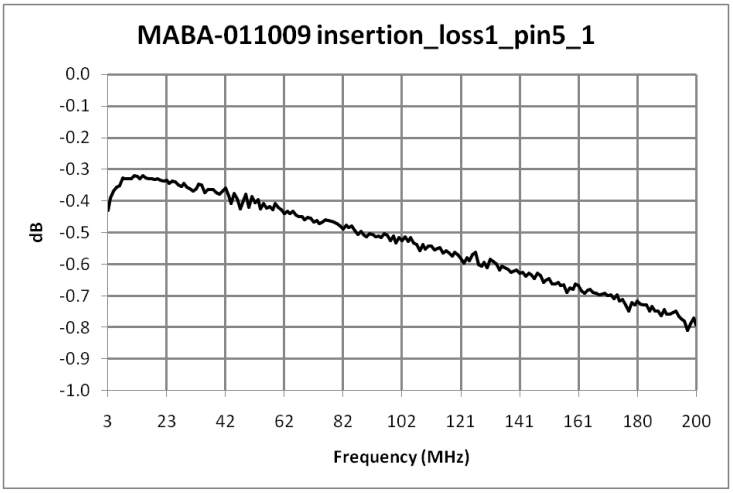

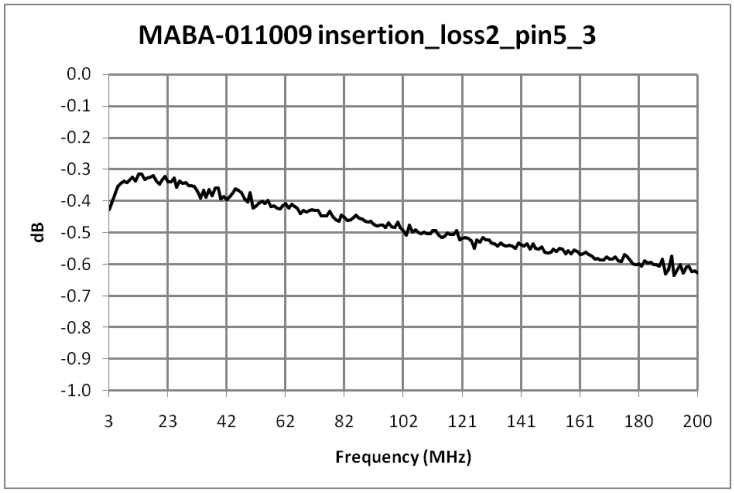

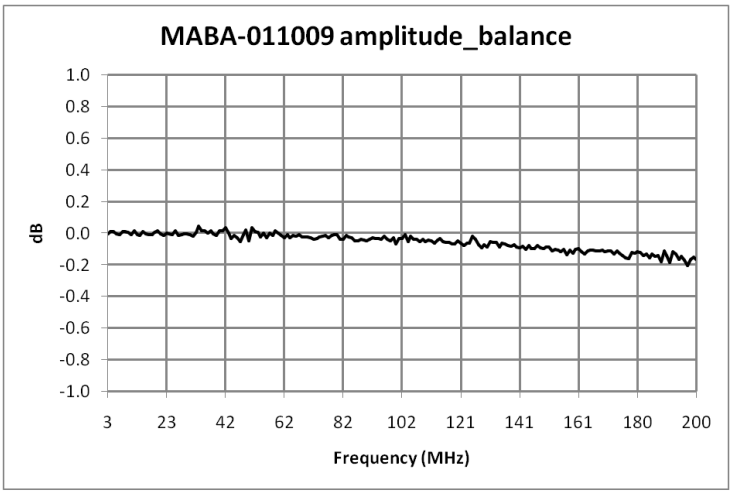

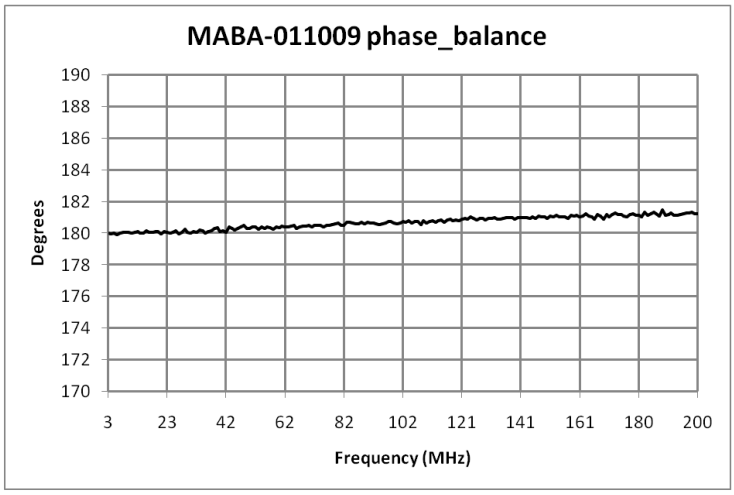

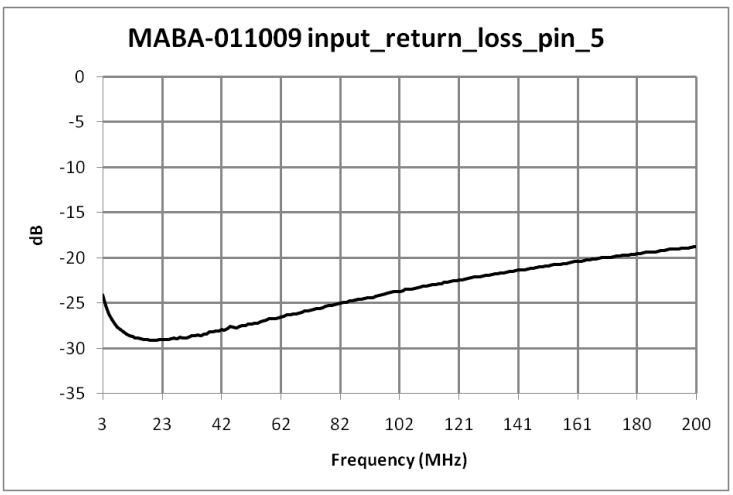

Electrical Specifications: Z_0 = 75Ω, T_A = 25°C, P_{in} = 0dBm

ADVANCED: Data Sheets contain information regarding a product M/A-COM Technology Solutions is considering for development. Performance is based on target specifications, simulated results, and/or prototype measurements. Commitment to develop is not guaranteed.
PRELIMINARY: Data Sheets contain information regarding a product M/A-COM Technology Solutions has under development. Performance is based on engineering tests. Specifications are typical. Mechanical outline has been fixed. Engineering samples and/or test data may be available. Commitment to produce in volume is not guaranteed.

- **North America** Tel: 800.366.2266
- **Europe** Tel: +353.21.244.6400
- **India** Tel: +91.80.43537383
- **China** Tel: +86.21.2407.1588

Visit www.macomtech.com for additional data sheets and product information.

M/A-COM Technology Solutions Inc. and its affiliates reserve the right to make changes to the product(s) or information contained herein without notice.

MABA-011009

Transformer, 1:1
3 MHz - 200 MHz

Rev. V2

Outline Drawing

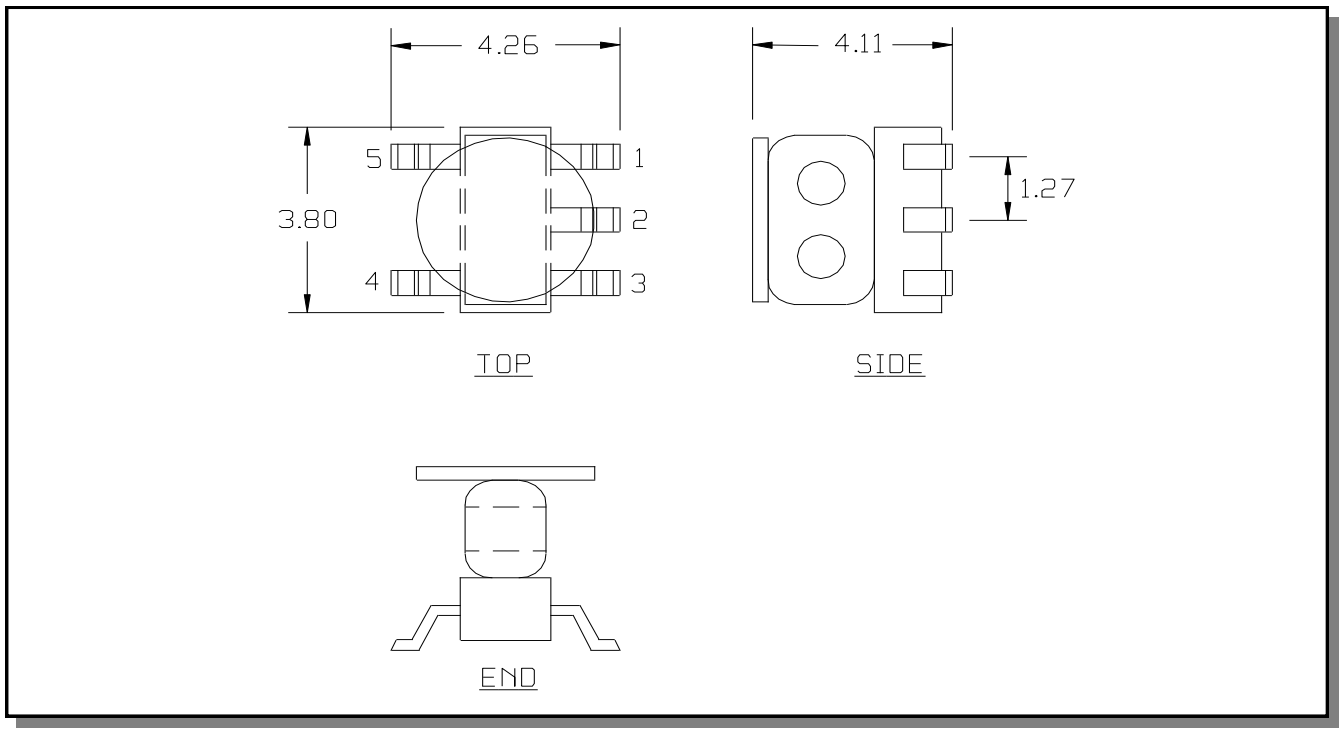

1. Dimensions in mm.
2. Tolerance: ±0.2mm unless otherwise noted.
3. Model number and lot code printed on reel.
4. Plating finish: CuSn6

Application Circuit

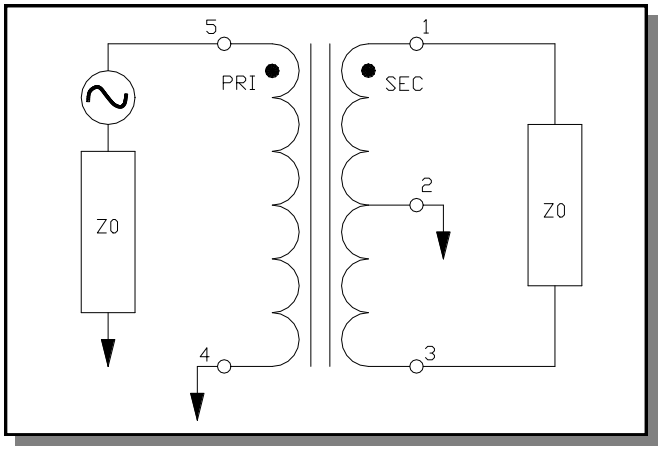

Recommended Footprint

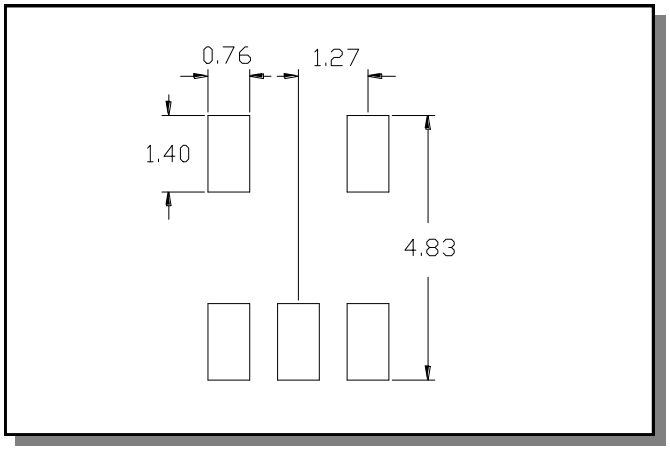

ADVANCED: Data Sheets contain information regarding a product M/A-COM Technology Solutions is considering for development. Performance is based on target specifications, simulated results, and/or prototype measurements. Commitment to develop is not guaranteed.
PRELIMINARY: Data Sheets contain information regarding a product M/A-COM Technology Solutions has under development. Performance is based on engineering tests. Specifications are typical. Mechanical outline has been fixed. Engineering samples and/or test data may be available. Commitment to produce in volume is not guaranteed.

• **North America** Tel: 800.366.2266 • **Europe** Tel: +353.21.244.6400
• **India** Tel: +91.80.43537383 • **China** Tel: +86.21.2407.1588
Visit www.macomtech.com for additional data sheets and product information.

M/A-COM Technology Solutions Inc. and its affiliates reserve the right to make changes to the product(s) or information contained herein without notice.

Tape & Reel Information

Parameter	Units	Value
Qty per reel	-	2000
Reel size	mm	330
Tape width (W)	mm	12.00
Pitch (P_1)	mm	8.00
A_0	mm	4.50
B_0	mm	4.00
K_0	mm	4.40
Orientation	-	F26
Reference Application note ANI-019 for orientation		

Ordering Information

Part Number	Description
MABA-011009	Tape & Reel
MABA-011009-TB	Customer Evaluation Board

Recommended Maximum Ratings

Parameter	Units	Min	Max
Input Power	mW		250
DC Current	mA		200
Operating Temperature Range	ºC	-40	+85

Temperature data available on request

ADVANCED: Data Sheets contain information regarding a product M/A-COM Technology Solutions is considering for development. Performance is based on target specifications, simulated results, and/or prototype measurements. Commitment to develop is not guaranteed.
PRELIMINARY: Data Sheets contain information regarding a product M/A-COM Technology Solutions has under development. Performance is based on engineering tests. Specifications are typical. Mechanical outline has been fixed. Engineering samples and/or test data may be available. Commitment to produce in volume is not guaranteed.

• **North America** Tel: 800.366.2266 • **Europe** Tel: +353.21.244.6400
• **India** Tel: +91.80.43537383 • **China** Tel: +86.21.2407.1588
Visit www.macomtech.com for additional data sheets and product information.

M/A-COM Technology Solutions Inc. and its affiliates reserve the right to make changes to the product(s) or information contained herein without notice.