2.25 V Voltage Variable Absorptive Attenuator, 42 dB 1.8 - 2.5 GHz

MAAVSS0001 V3

Features

- Single Positive Voltage Control, 0 to +2.25 Volts
- 42 dB Typical Attenuation Range at 2.4 GHz
- Low DC Power Consumption
- Lead-Free SOT-25 Package
- 100% Matte Tin Plating over Copper
- Halogen-Free "Green" Mold Compound
- 260°C Reflow Compatible
- RoHS* Compliant Version of AT-119

Description

M/A-COM's MAAVSS0001 is a GaAs MMIC voltage variable absorptive attenuator in a lead-free SOT-25 surface mount plastic package. M/A-COM fabricates the MAAVSS0001 with a proven monolithic GaAs 0.5 micron gate process that features full chip passivation for performance and reliability.

Applications

The MAAVSS0001 is ideally suited for applications that require fine tuning, linear attenuation with voltage, and very low power consumption.

Typical applications for the MAAVSS0001 include automatic gain control circuits in satellite radio receivers and other wireless receivers.

Ordering Information[1]

Part Number	Package
MAAVSS0001	Bulk Packaging
MAAVSS0001TR-3000	3000 piece reel
MAAVSS0001SMB	Sample Test Board (Includes 5 Samples)

1. Reference Application Note M513 for reel size information.

Functional Schematic

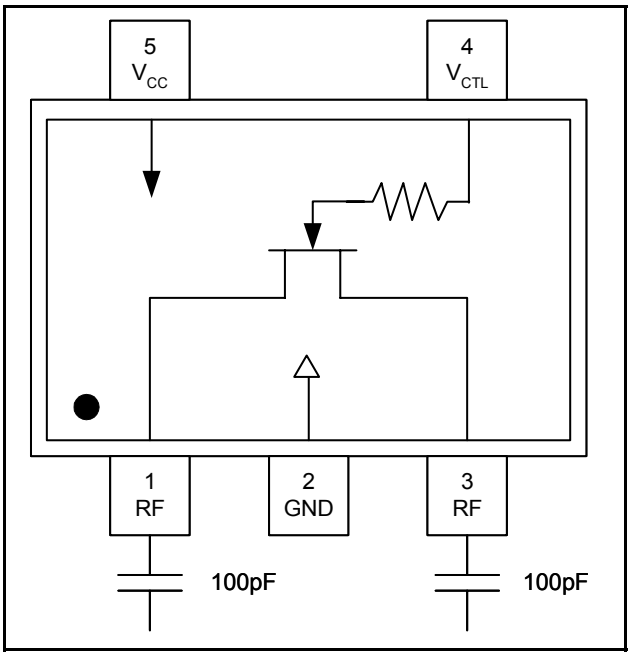

Pin Configuration

Pin	Function	Description
1	RF	RF (input / output)
2	GND	Ground
3	RF	RF (input / output)
4	V_{CTL}	Control Voltage
5	V_{CC}	DC Supply Voltage

Absolute Maximum Ratings [2,3]

@ T_A = +25°C (unless otherwise specified)

Parameter	Absolute Maximum
Input Power	+21 dBm
Supply Voltage V_{CC}	-1 V ≤ V_{CC} ≤ +8 V
Control Voltage V_{CTL}	-1 V ≤ V_{CTL} ≤ V_{CC} +0.5 V
Operating Temperature	-40°C to +85°C
Storage Temperature	-65°C to +150°C

2. Exceeding any one or combination of these limits may cause permanent damage to this device.
3. M/A-COM does not recommend sustained operation near these survivability limits.

* Restrictions on Hazardous Substances, European Union Directive 2002/95/EC.

M/A-COM Inc. and its affiliates reserve the right to make changes to the product(s) or information contained herein without notice. M/A-COM makes no warranty, representation or guarantee regarding the suitability of its products for any particular purpose, nor does M/A-COM assume any liability whatsoever arising out of the use or application of any product(s) or information.

• **North America** Tel: 800.366.2266 / Fax: 978.366.2266
• **Europe** Tel: 44.1908.574.200 / Fax: 44.1908.574.300
• **Asia/Pacific** Tel: 81.44.844.8296 / Fax: 81.44.844.8298

Visit www.macom.com for additional data sheets and product information.

2.25 V Voltage Variable Absorptive Attenuator, 42 dB 1.8 - 2.5 GHz

MAAVSS0001 V3

Electrical Specifications: T_A = 25°C, Frequency = 2.4 GHz, V_{CC} = 3.3 V, Z_0 = 50 Ω

Parameter	Test Conditions [4,5]	Units	Min.	Typ.	Max.
Insertion Loss	V_{CTL} = 2.25 V	dB	—	2.4	3.2
Maximum Attenuation	V_{CTL} = 0.5 V	dB	37	42	—
Attenuation Slope	0.75 V < V_{CTL} < 1.75 V	dB/V	24	—	—
Return Loss	0.0 V < V_{CTL} < 0.75 V 0.75 V < V_{CTL} < 1.75 V 1.75 V < V_{CTL} < 2.25 V	dB dB dB	— — —	6 10 14	— — —
Input Power for 1dB Change in Attenuation	0.75 V < V_{CTL} < 2.25 V	dBm	—	10	—
Input 3rd Order Intercept Point	0.75 V < V_{CTL} < 2.25 V	dBm	—	15	—
Switching Speed	50% V_{CTL} to 10% / 90% RF	nS	—	100	—
Transients	V_{CTL} = 3 V, In-Band	mV	—	10	—

4. External DC blocking capacitors are required on all RF ports.
5. V_{CC} = +3.3 V @ 50 µA typical. V_{CTL} = 0 V to +2.25 V @ 50 µA typical.

Application Schematic

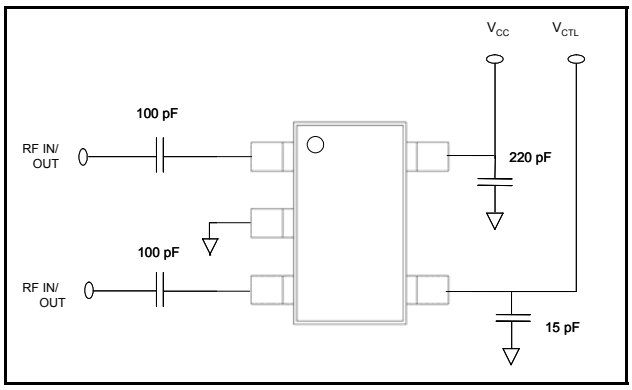

Handling Procedures

Please observe the following precautions to avoid damage:

Static Sensitivity

Gallium Arsenide Integrated Circuits are sensitive to electrostatic discharge (ESD) and can be damaged by static electricity. Proper ESD control techniques should be used when handling these devices.

M/A-COM Inc. and its affiliates reserve the right to make changes to the product(s) or information contained herein without notice. M/A-COM makes no warranty, representation or guarantee regarding the suitability of its products for any particular purpose, nor does M/A-COM assume any liability whatsoever arising out of the use or application of any product(s) or information.

• **North America** Tel: 800.366.2266 / Fax: 978.366.2266
• **Europe** Tel: 44.1908.574.200 / Fax: 44.1908.574.300
• **Asia/Pacific** Tel: 81.44.844.8296 / Fax: 81.44.844.8298

Visit www.macom.com for additional data sheets and product information.

Typical Performance Curves

Insertion Loss vs. Frequency @ 2.25 V Control Voltage

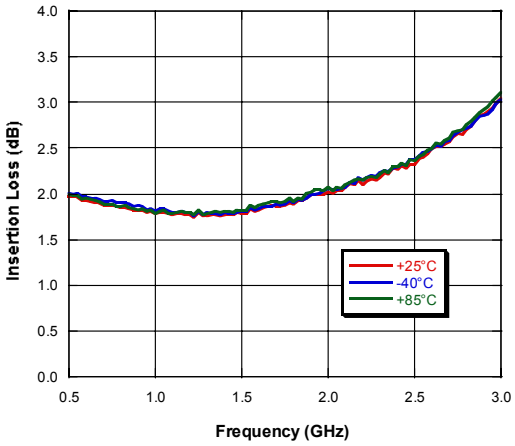

Attenuation vs. Control Voltage @ +25°C

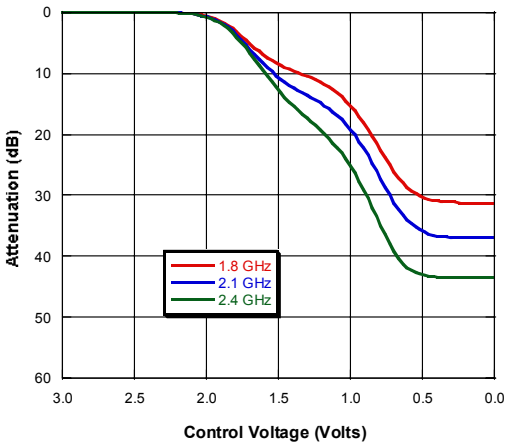

Typical Device Variation, 2.4 GHz

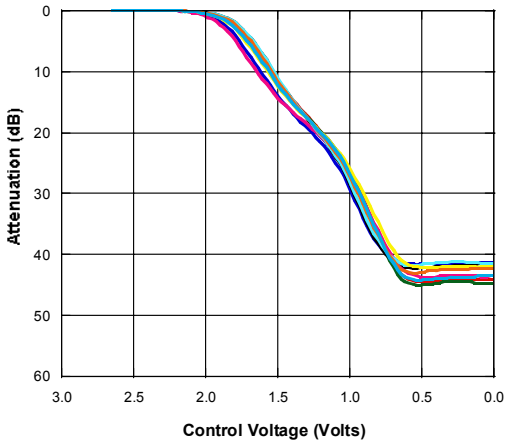

Attenuation vs. Frequency @ 0.0 V Control Voltage

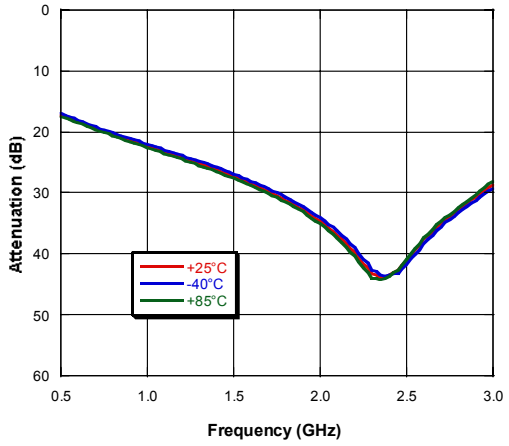

Return Loss vs. Control Voltage

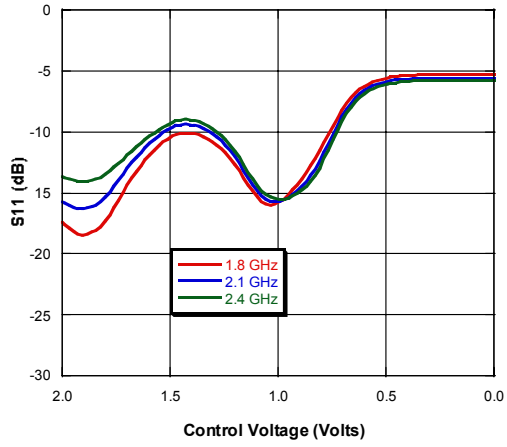

Insertion Loss Delta Normalized to +25°C (-40°C)

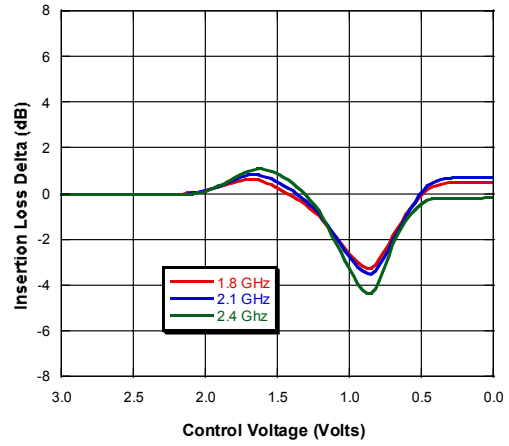

M/A-COM Inc. and its affiliates reserve the right to make changes to the product(s) or information contained herein without notice. M/A-COM makes no warranty, representation or guarantee regarding the suitability of its products for any particular purpose, nor does M/A-COM assume any liability whatsoever arising out of the use or application of any product(s) or information.

- **North America** Tel: 800.366.2266 / Fax: 978.366.2266
- **Europe** Tel: 44.1908.574.200 / Fax: 44.1908.574.300
- **Asia/Pacific** Tel: 81.44.844.8296 / Fax: 81.44.844.8298

Visit www.macom.com for additional data sheets and product information.

Typical Performance Curves

Insertion Loss Delta Normalized to +25°C (+85°C)

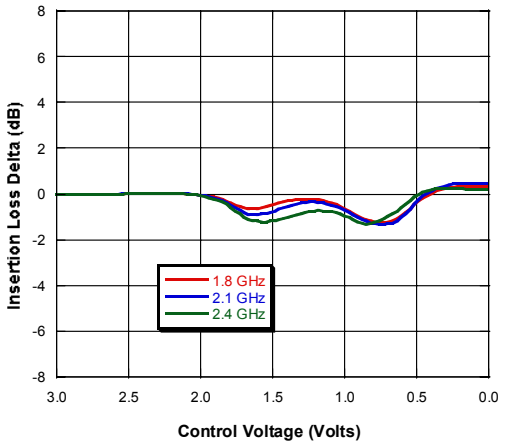

Input IP3 vs. Control Voltage @ +25°C

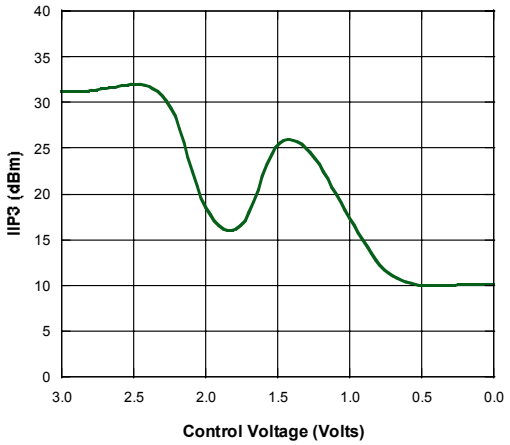

Input Power for 1 dB Change in Attenuation

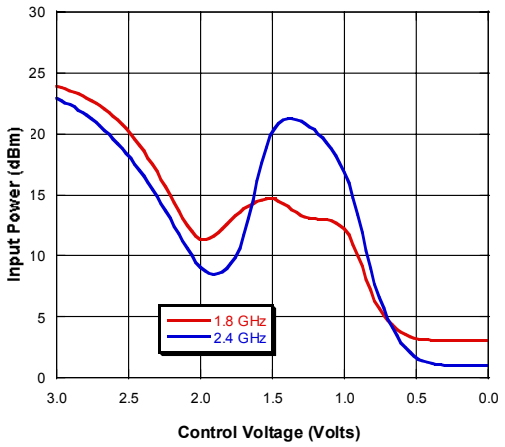

Input IP3 vs. Control Voltage over Temperature

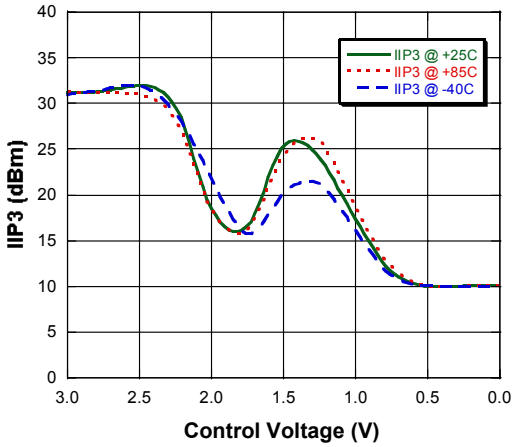

Lead-Free SOT-25†

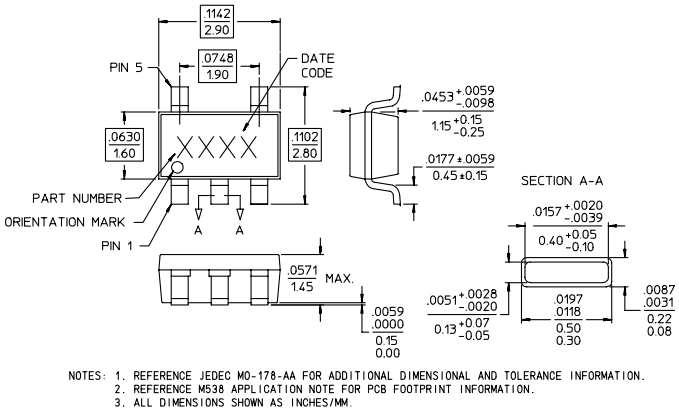

NOTES: 1. REFERENCE JEDEC MO-178-AA FOR ADDITIONAL DIMENSIONAL AND TOLERANCE INFORMATION.
2. REFERENCE M538 APPLICATION NOTE FOR PCB FOOTPRINT INFORMATION.
3. ALL DIMENSIONS SHOWN AS INCHES/MM.

† Reference Application Note M538 for lead-free solder reflow recommendations.

M/A-COM Inc. and its affiliates reserve the right to make changes to the product(s) or information contained herein without notice. M/A-COM makes no warranty, representation or guarantee regarding the suitability of its products for any particular purpose, nor does M/A-COM assume any liability whatsoever arising out of the use or application of any product(s) or information.

- **North America** Tel: 800.366.2266 / Fax: 978.366.2266
- **Europe** Tel: 44.1908.574.200 / Fax: 44.1908.574.300
- **Asia/Pacific** Tel: 81.44.844.8296 / Fax: 81.44.844.8298

Visit www.macom.com for additional data sheets and product information.