MAAM-009455

Push Pull CATV Amplifier
50 - 1000 MHz

Rev. V1

Features

- 20 dB Gain
- 8 V DC Bias
- Differential Inputs and Outputs
- Low Distortion
- Lead-Free 4 mm 20-Lead PQFN package
- Halogen-Free “Green” Mold Compound
- RoHS* Compliant and 260°C Reflow Compatible

Description

The MAAM-009455 is a GaAs MMIC amplifier in a lead-free 4 mm 20-lead PQFN package. The MMIC design is configured as a pair of cascode MESFET amplifiers for broadband performance. It is designed for integration in a 75 Ω push-pull, low distortion, amplifier circuit.

This device is ideally suited for use in CATV, FTTX, DBS, and HDTV applications where low noise figure and low distortion are required.

Ordering Information [1,2]

Part Number	Package
MAAM-009455-000000	Bulk Packaging
MAAM-009455-TR1000	1000 Piece Reel
MAAM-009455-TR3000	3000 Piece Reel
MAAM-009455-001SMB	Sample Test Board

1. Reference Application Note M513 for reel size information.
2. All sample boards include 5 loose parts.

Functional Schematic

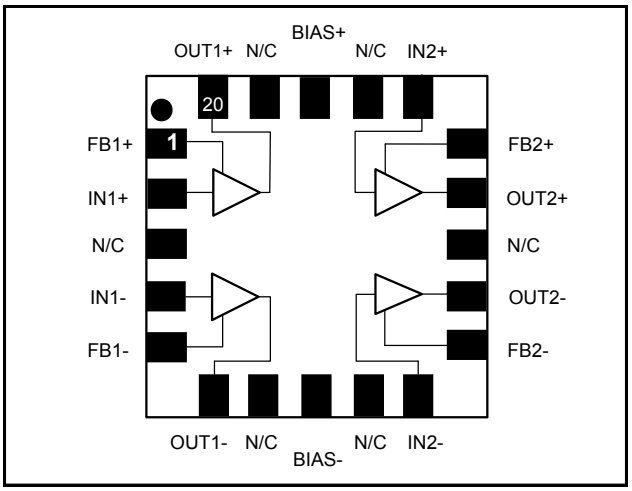

Pin Configuration [3]

Pin No.	Pin Name	Description
1	FB1+	Feedback 1+
2	IN1+	Input 1+
3	N/C	No Connection
4	IN1-	Input 1-
5	FB1-	Feedback 1-
6	OUT1-	Output 1-
7	N/C	No Connection
8	BIAS-	DC Bias
9	N/C	No Connection
10	IN2-	Input 2-
11	FB2-	Feedback 2-
12	OUT2-	Output 2-
13	N/C	No Connection
14	OUT2+	Output 2+
15	FB2+	Feedback 2+
16	IN2+	Input 2+
17	N/C	No Connection
18	BIAS+	DC Bias
19	N/C	No Connection
20	OUT1+	Output 1+
Paddle[4]	RF and DC Ground	

3. It is recommended, but not absolutely compulsory, that all No Connections (N/C) within the IC are connected to ground on the printed circuit board.
4. The exposed pad centered on the package bottom must be connected to RF and DC ground.

* Restrictions on Hazardous Substances, European Union Directive 2002/95/EC.

M/A-COM Technology Solutions Inc. (MACOM) and its affiliates reserve the right to make changes to the product(s) or information contained herein without notice.
Visit www.macom.com for additional data sheets and product information.

For further information and support please visit:
https://www.macom.com/support

Push Pull CATV Amplifier
50 - 1000 MHz

Electrical Specifications: T_A = 25°C, Freq: 1000 MHz, V_{DD} = +8 Volts, Z_0 = 75 Ω, Test Circuit with M/A-COM Technology Balun MABA-009210-CT1760

Parameter	Test Conditions	Units	Min.	Typ.	Max.
Gain	—	dB	19.5	20.5	23
Gain Flatness	—	dB	—	0.5	—
Noise Figure	—	dB	—	5.5	—
Reverse Isolation	—	dB	—	36	—
Input Return Loss	—	dB	—	22	—
Output Return Loss	—	dB	—	15	—
Output IP2	Two tones at 500 & 506 MHz, +8 dBm output/tone	dBm	—	80	—
Output IP3	Two tones at 500 & 506 MHz, +8 dBm output/tone	dBm	41	43	—
Composite Triple Beat, CTB	77 Channels, +39 dBm V / Channel at the output	dBc	—	-70	—
Composite Second Order, CSO	77 Channels, +39 dBm V / Channel at the output	dBc	—	-70	—
Cross modulation	77 Channels, +39 dBm V / Channel at the output	dBc	—	-70	—
P1dB	500 MHz	dBm	—	26	—
I_{DD}	+8 Volts	mA	—	325	385

Electrical Specifications: Frequency: 500 MHz, 256 QAM

Parameter	Test Conditions	Units	Ref Spec[5]	Typical data
Adjacent channel up to 750 KHz from channel block edge	P_{OUT} = +60 dBmV, N=1 P_{OUT} = +56 dBmV, N=2 P_{OUT} = +52 dBmV, N=4	dBc	<-58 <-58 <-58	-65 -65 -66
Adjacent channel (750 kHz from channel block edge to 6 MHz from channel block edge)	P_{OUT} = +60 dBmV, N=1 P_{OUT} = +56 dBmV, N=2 P_{OUT} = +52 dBmV, N=4	dBc	<-62 <-60 <-60	-67 -64 -63
Next-adjacent channel (6 MHz from channel block edge to 18 MHz from channel block edge)	P_{OUT} = +60 dBmV, N=1 P_{OUT} = +56 dBmV, N=2 P_{OUT} = +52 dBmV, N=4	dBc	<-65 <-64 <-63	-75 -70 -65
Third-adjacent channel (12 MHz from channel block edge to 18 MHz from channel block edge)	P_{OUT} = +60 dBmV, N=1 P_{OUT} = +56 dBmV, N=2 P_{OUT} = +52 dBmV, N=4	dBc	<-73 <-70 <-65	-76 -73 -68
In each of 2N contiguous 6 MHz channels or in each of 3N contiguous 6 MHz channels coinciding with 2nd harmonic and with 3rd harmonic components respectively (up to 1000 MHz)	P_{OUT} = +60 dBmV, N=1, 2nd Harmonic P_{OUT} = +60 dBmV, N=1, 3rd Harmonic	dBc	–63 –63	-70 -65

5. Reference Specification Data-Over-Cable Service Interface Specifications, DOCSIS. Downstream RF Interface Specification, DRFI.

M/A-COM Technology Solutions Inc. (MACOM) and its affiliates reserve the right to make changes to the product(s) or information contained herein without notice.
Visit www.macom.com for additional data sheets and product information.

For further information and support please visit:
https://www.macom.com/support

Absolute Maximum Ratings [6,7,8]

Parameter	Absolute Maximum
RF Input Power	6 dBm
Voltage	15.0 volts
Operating Temperature	-40°C to +85°C
Junction Temperature[9]	+150°C
Storage Temperature	-65°C to +150°C

6. Exceeding any one or combination of these limits may cause permanent damage to this device.
7. M/A-COM Technology Solutions does not recommend sustained operation near these survivability limits.
8. These operating conditions will ensure MTTF > 1 x 10^6 hours.
9. Junction Temperature (T_J) = T_C + Θjc * (V * I)
   Typical thermal resistance (Θjc) = 15° C/W.
   a) For T_C = 25°C,
   T_J = 71°C @ 8 V, 385 mA
   b) For T_C = 85°C,
   T_J = 130°C @ 8 V, 375 mA

Land Pattern[10]

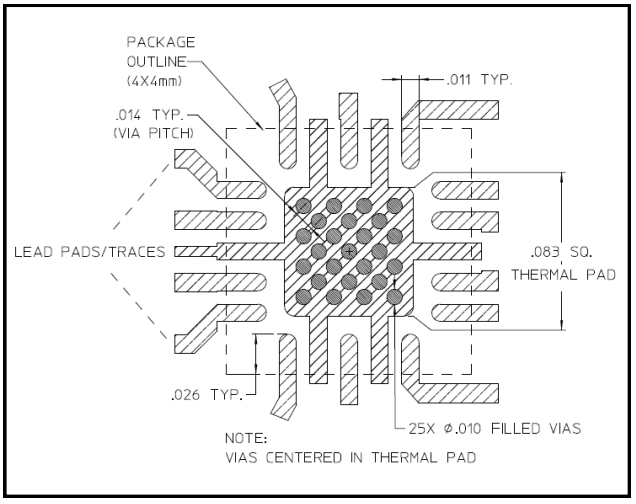

10. Vias to be plated solid copper.

Handling Procedures

Please observe the following precautions to avoid damage:

Static Sensitivity

Gallium Arsenide Integrated Circuits are sensitive to electrostatic discharge (ESD) and can be damaged by static electricity. Proper ESD control techniques should be used when handling these devices.

An external protection circuit using an inexpensive anti-parallel diode pair can be used to protect the IC. Please reference application note AN3028 on http://www.macomtech.com for further detail.

M/A-COM Technology Solutions Inc. (MACOM) and its affiliates reserve the right to make changes to the product(s) or information contained herein without notice.
Visit www.macom.com for additional data sheets and product information.

For further information and support please visit:
https://www.macom.com/support

Push Pull CATV Amplifier
50 - 1000 MHz

Rev. V1

Application Schematic

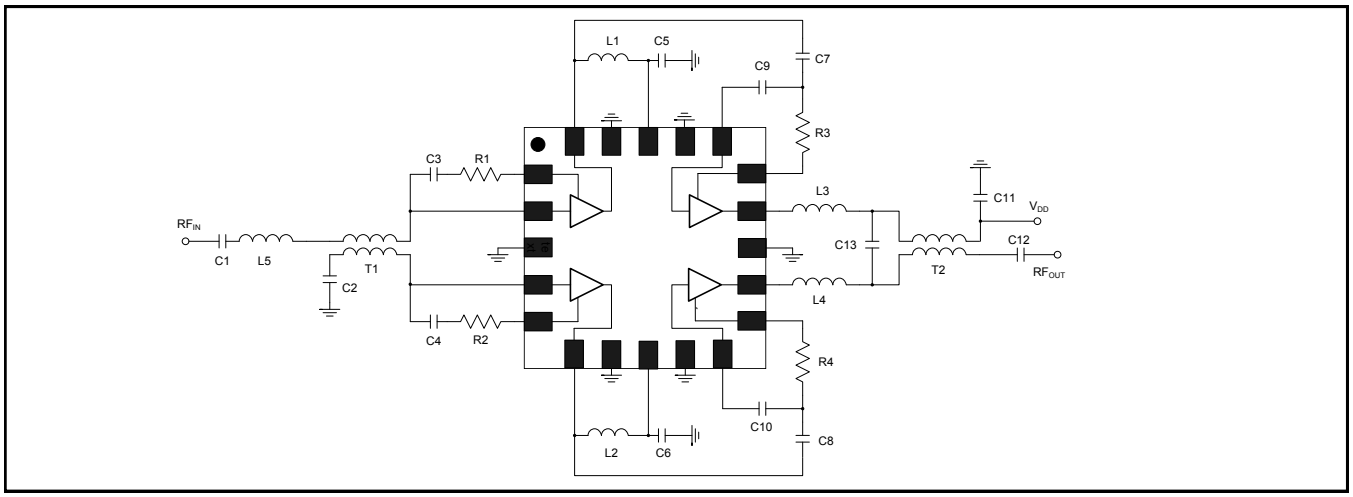

Recommended PCB

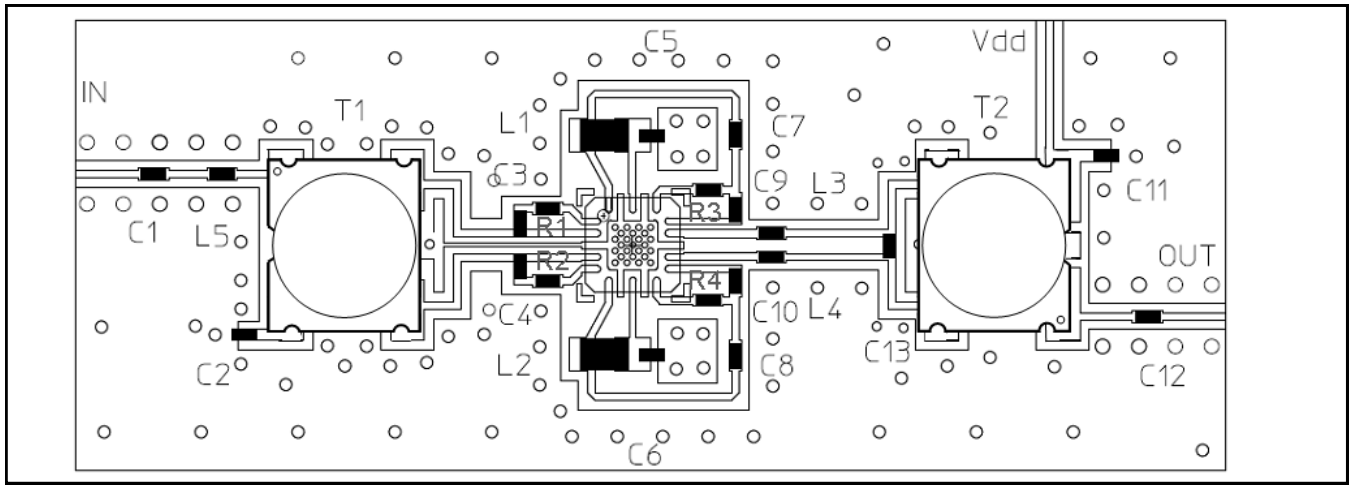

Parts List[11]

Component	Value	Package
C1 - C12	0.01 µF	0402
C13	2.7 pF	0402
L1, L2	390 nH	0805
L3, L4	2 nH	0402
L5	5.6 nH	0402
R1 - R4	0 Ω	0402
T1, T2	1:1 Baluns	

11. The 1:1 baluns, T1 &T2 are M/A-COM Technology Solutions part number MABA-009210-CT1760

M/A-COM Technology Solutions Inc. (MACOM) and its affiliates reserve the right to make changes to the product(s) or information contained herein without notice.
Visit www.macom.com for additional data sheets and product information.

For further information and support please visit:
https://www.macom.com/support

Typical Performance Curves Over Temperature

Gain to 1 GHz

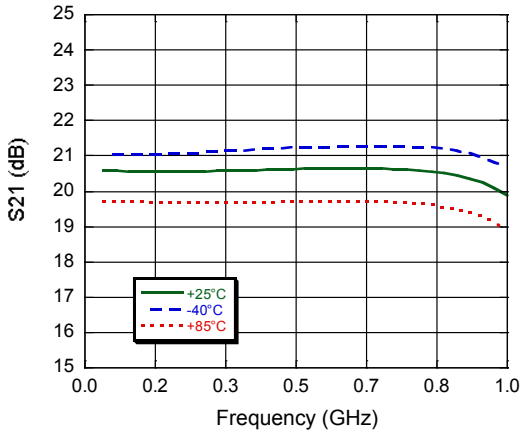

Gain to 3 GHz

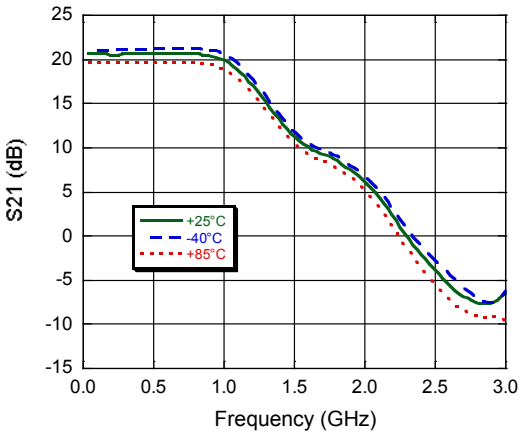

Input Return Loss

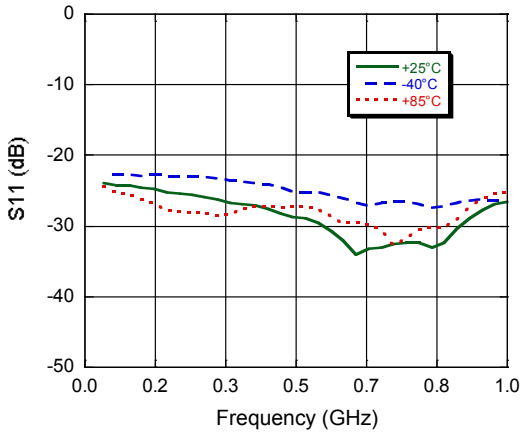

Output Return Loss

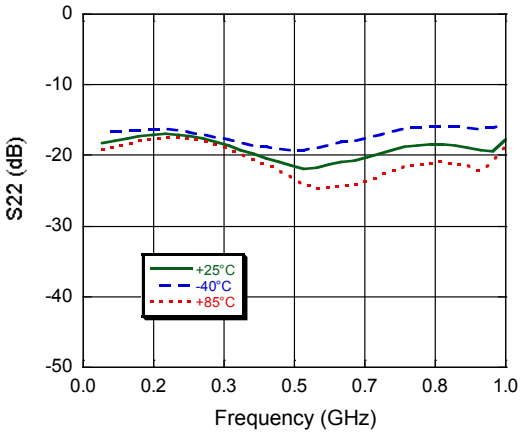

Reverse Isolation to 3 GHz

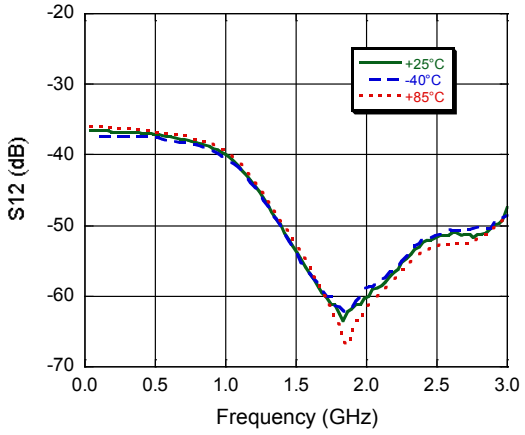

Noise Figure

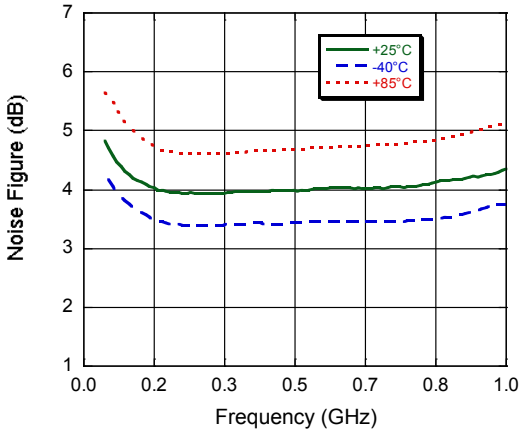

M/A-COM Technology Solutions Inc. (MACOM) and its affiliates reserve the right to make changes to the product(s) or information contained herein without notice.
Visit www.macom.com for additional data sheets and product information.

For further information and support please visit:
https://www.macom.com/support

Lead Free 4 mm 20-lead PQFN†

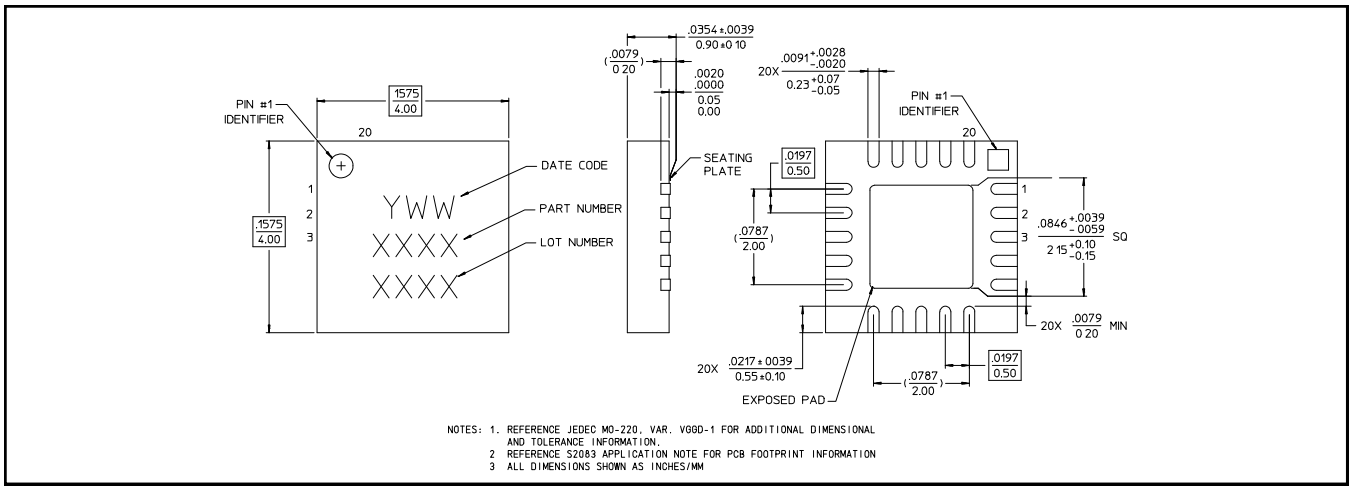

† Reference Application Note S2083 for lead-free solder reflow recommendations.
Meets JEDEC moisture sensitivity level 1 requirements.
Plating is 100% matte tin over copper.

M/A-COM Technology Solutions Inc. (MACOM) and its affiliates reserve the right to make changes to the product(s) or information contained herein without notice.
Visit www.macom.com for additional data sheets and product information.

For further information and support please visit:
https://www.macom.com/support

M/A-COM Technology Solutions Inc. All rights reserved.
Information in this document is provided in connection with M/A-COM Technology Solutions Inc ("MACOM") products. These materials are provided by MACOM as a service to its customers and may be used for informational purposes only. Except as provided in MACOM's Terms and Conditions of Sale for such products or in any separate agreement related to this document, MACOM assumes no liability whatsoever. MACOM assumes no responsibility for errors or omissions in these materials. MACOM may make changes to specifications and product descriptions at any time, without notice. MACOM makes no commitment to update the information and shall have no responsibility whatsoever for conflicts or incompatibilities arising from future changes to its specifications and product descriptions. No license, express or implied, by estoppels or otherwise, to any intellectual property rights is granted by this document.

THESE MATERIALS ARE PROVIDED "AS IS" WITHOUT WARRANTY OF ANY KIND, EITHER EXPRESS OR IMPLIED, RELATING TO SALE AND/OR USE OF MACOM PRODUCTS INCLUDING LIABILITY OR WARRANTIES RELATING TO FITNESS FOR A PARTICULAR PURPOSE, CONSEQUENTIAL OR INCIDENTAL DAMAGES, MERCHANTABILITY, OR INFRINGEMENT OF ANY PATENT, COPYRIGHT OR OTHER INTELLECTUAL PROPERTY RIGHT. MACOM FURTHER DOES NOT WARRANT THE ACCURACY OR COMPLETENESS OF THE INFORMATION, TEXT, GRAPHICS OR OTHER ITEMS CONTAINED WITHIN THESE MATERIALS. MACOM SHALL NOT BE LIABLE FOR ANY SPECIAL, INDIRECT, INCIDENTAL, OR CONSEQUENTIAL DAMAGES, INCLUDING WITHOUT LIMITATION, LOST REVENUES OR LOST PROFITS, WHICH MAY RESULT FROM THE USE OF THESE MATERIALS.

MACOM products are not intended for use in medical, lifesaving or life sustaining applications. MACOM customers using or selling MACOM products for use in such applications do so at their own risk and agree to fully indemnify MACOM for any damages resulting from such improper use or sale.