MAAM-009286

RF Driver Amplifier
250 - 4000 MHz

Rev. V1

Features

- +42 dBm Output IP3
- Broadband Operation
- Lead-Free SOT-89 Package
- Halogen-Free "Green" Mold Compound
- RoHS* Compliant and 260°C Reflow Compatible
- Class 2 ESD Rating

Description

The MAAM-009286 RF driver amplifier is a GaAs MMIC which exhibits exceptional linearity, as well as high gain in a lead-free SOT-89 surface mount plastic package. Broadband operation over the 250 to 4000 MHz range is achieved using external matching components as shown in the PCB layout. Different component values may be needed to optimize performance at different center frequencies. The device is biased with a single +5 volt supply and consumes 155 mA typically.

The MAAM-009286 is fabricated using an HBT process to realize low current and high linearity. The process features full passivation for increased performance and reliability.

Ordering Information[1,2]

Part Number	Package
MAAM-009286-000000	Bulk Packaging
MAAM-009286-TR3000	3000 piece reel
MAAM-009286-001SMB	Sample Board

1. Reference Application Note M513 for reel size information.
2. All sample boards include 5 loose parts.

* Restrictions on Hazardous Substances, European Union Directive 2002/95/EC.

Functional Schematic

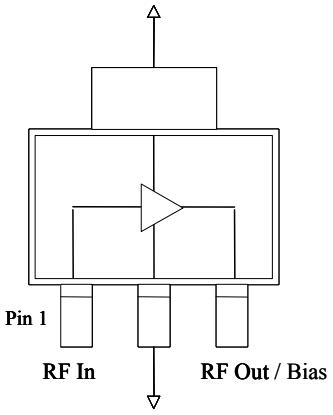

Pin Configuration

Pin No.	Function	Pin No.	Function
1	RF Input	3	RF Output/Bias
2	Ground		

Maximum Operating Conditions[3]

Parameter	Maximum Operating Conditions
Junction Temperature [4]	170°C
RF Output Power	27 dBm
Operating Temperature	-40°C to +85°C

3. These operating conditions will ensure MTTF > 1 x 10^6 hours.
4. Junction Temperature (T_J) = T_A + Θjc * ((V * I) - (P_{OUT} - P_{IN}))
   Typical thermal resistance (Θjc) = 70° C/W
   a) For T_A = 25°C,
   T_J = 76 °C @ 5 V, 170 mA, P_{OUT} = 21 dBm, P_{IN} = 5.5 dBm
   b) For T_A = 85°C,
   T_J = 125 °C @ 5 V, 140 mA, P_{OUT} = 21 dBm, P_{IN} = 6.2 dBm

Absolute Maximum Ratings[5,6]

Parameter	Absolute Maximum
RF Output Power	28 dBm
Voltage	6 volts
Storage Temperature	-65°C to +150°C
Junction Temperature	210°C

5. Exceeding any one or combination of these limits may cause permanent damage to this device.
6. M/A-COM Technology does not recommend sustained operation near these survivability limits.

M/A-COM Technology Solutions Inc. (MACOM) and its affiliates reserve the right to make changes to the product(s) or information contained herein without notice.
Visit www.macom.com for additional data sheets and product information.

For further information and support please visit:
https://www.macom.com/support

RF Driver Amplifier
250 - 4000 MHz

Rev. V1

Electrical Specifications: Freq. = 2140 MHz, T_A = +25°C, V_{CC} = +5 V, Z_0 = 50 Ω

Parameter	Units	Min.	Typ.	Max.
Gain	dB	14	15.5	—
Noise Figure	dB	—	3.5	—
Input Return Loss	dB	—	11	—
Output Return Loss	dB	—	13	—
Output P1dB	dBm	—	27	—
Output IP3 P_{IN} = -6 dBm / tone, 1 MHz spacing	dBm	40	42	—
Quiescent Current	mA	—	155	—
Current (P_{IN} = -3 dBm)	mA	—	155	225

2140 MHz PCB Layout

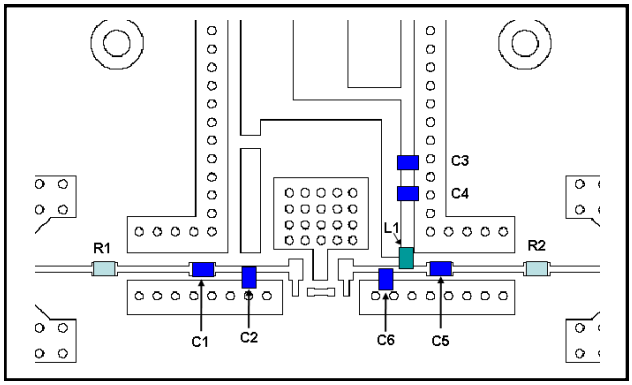

Parts List

Part	Value	Case Style
C1	12 pF	0402
C2	2.2 pF	0402
C3	0.1 µF	0402
C4	1000 pF	0402
C5	39 pF	0402
C6	1.2 pF	0402
L1	7.5 nH	0402
R1, R2	0 Ω	0402

2140 MHz Schematic

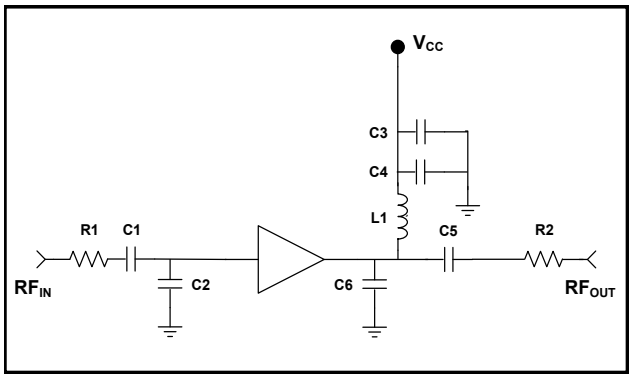

Cross Section View

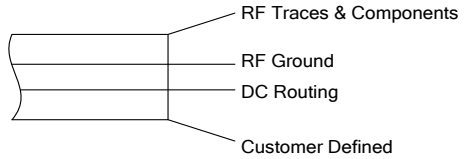

The PCB dielectric between RF traces and RF ground layers should be chosen to reduce RF discontinuities between 50 Ω lines and package pins. M/A-COM recommends an FR-4 dielectric thickness of 0.008" (0.20 mm) yielding a 50 Ω line width of 0.015" (0.38 mm). The recommended RF metalization is 1 ounce copper.

M/A-COM Technology Solutions Inc. (MACOM) and its affiliates reserve the right to make changes to the product(s) or information contained herein without notice.
Visit www.macom.com for additional data sheets and product information.

For further information and support please visit:
https://www.macom.com/support

Typical Performance Curves, 2140 MHz Configuration

Gain

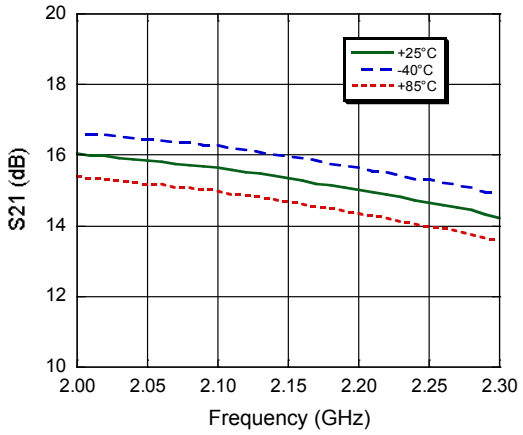

Input Return Loss

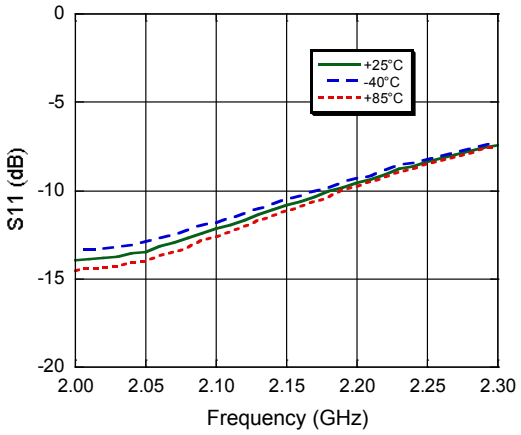

Output Return Loss

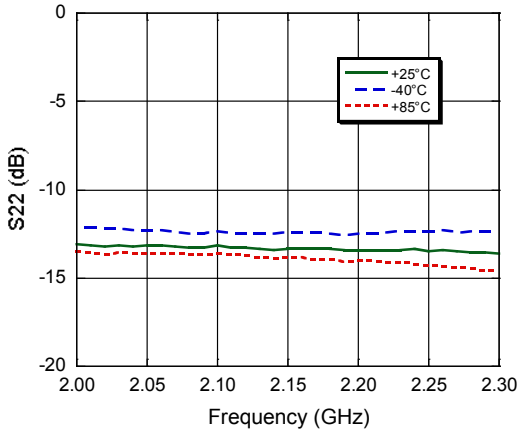

Noise Figure

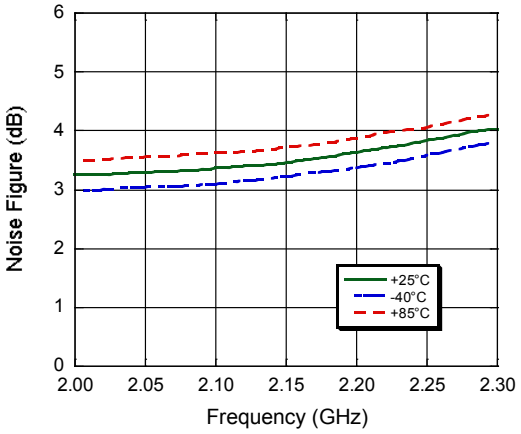

P1dB

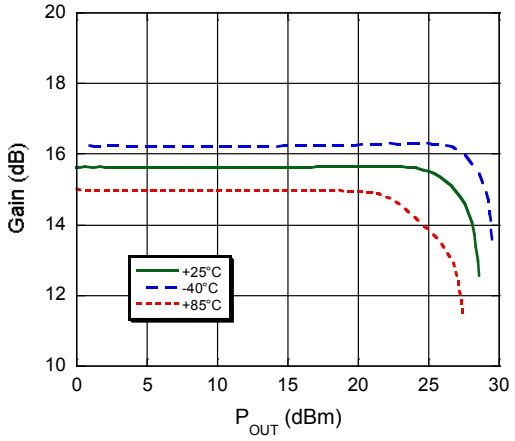

Output IP3

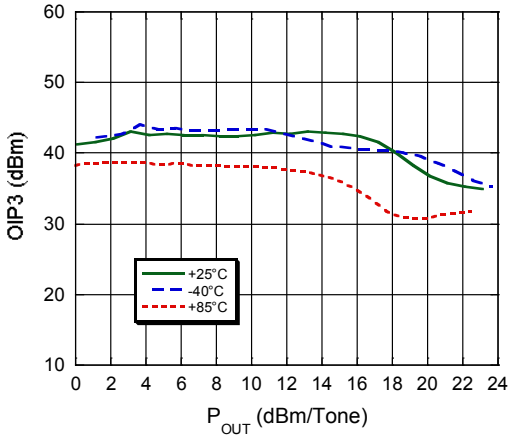

M/A-COM Technology Solutions Inc. (MACOM) and its affiliates reserve the right to make changes to the product(s) or information contained herein without notice.
Visit www.macom.com for additional data sheets and product information.

For further information and support please visit:
https://www.macom.com/support

Typical Performance Curves, 2140 MHz Configuration

Current

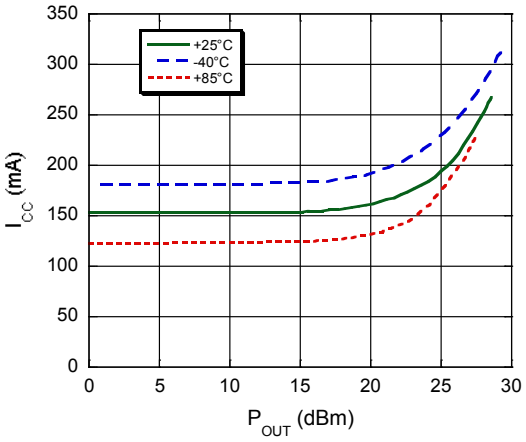

Handling Procedures

Please observe the following precautions to avoid damage:

Static Sensitivity

Gallium Arsenide Integrated Circuits are sensitive to electrostatic discharge (ESD) and can be damaged by static electricity. Proper ESD control techniques should be used when handling these class 2 devices.

Lead-Free SOT-89 Plastic Package†

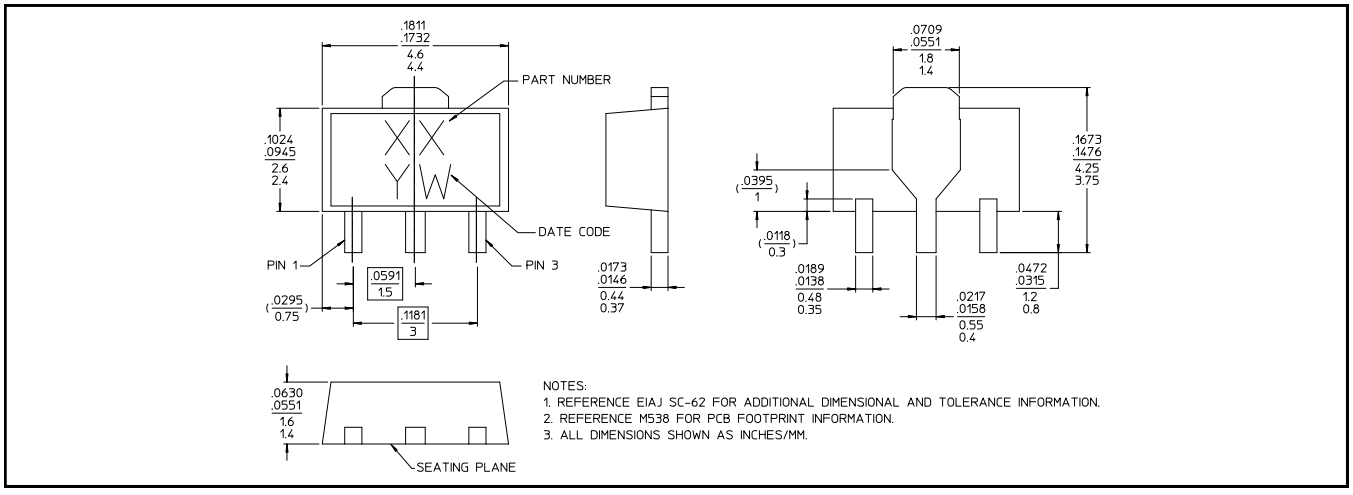

† Reference Application Note M538 for lead-free solder reflow recommendations.
Meets JEDEC moisture sensitivity level 1 requirements.
Plating is 100% matte tin over copper.

M/A-COM Technology Solutions Inc. (MACOM) and its affiliates reserve the right to make changes to the product(s) or information contained herein without notice.
Visit www.macom.com for additional data sheets and product information.

For further information and support please visit:
https://www.macom.com/support

M/A-COM Technology Solutions Inc. All rights reserved.
Information in this document is provided in connection with M/A-COM Technology Solutions Inc ("MACOM") products. These materials are provided by MACOM as a service to its customers and may be used for informational purposes only. Except as provided in MACOM's Terms and Conditions of Sale for such products or in any separate agreement related to this document, MACOM assumes no liability whatsoever. MACOM assumes no responsibility for errors or omissions in these materials. MACOM may make changes to specifications and product descriptions at any time, without notice. MACOM makes no commitment to update the information and shall have no responsibility whatsoever for conflicts or incompatibilities arising from future changes to its specifications and product descriptions. No license, express or implied, by estoppels or otherwise, to any intellectual property rights is granted by this document.

THESE MATERIALS ARE PROVIDED "AS IS" WITHOUT WARRANTY OF ANY KIND, EITHER EXPRESS OR IMPLIED, RELATING TO SALE AND/OR USE OF MACOM PRODUCTS INCLUDING LIABILITY OR WARRANTIES RELATING TO FITNESS FOR A PARTICULAR PURPOSE, CONSEQUENTIAL OR INCIDENTAL DAMAGES, MERCHANTABILITY, OR INFRINGEMENT OF ANY PATENT, COPYRIGHT OR OTHER INTELLECTUAL PROPERTY RIGHT. MACOM FURTHER DOES NOT WARRANT THE ACCURACY OR COMPLETENESS OF THE INFORMATION, TEXT, GRAPHICS OR OTHER ITEMS CONTAINED WITHIN THESE MATERIALS. MACOM SHALL NOT BE LIABLE FOR ANY SPECIAL, INDIRECT, INCIDENTAL, OR CONSEQUENTIAL DAMAGES, INCLUDING WITHOUT LIMITATION, LOST REVENUES OR LOST PROFITS, WHICH MAY RESULT FROM THE USE OF THESE MATERIALS.

MACOM products are not intended for use in medical, lifesaving or life sustaining applications. MACOM customers using or selling MACOM products for use in such applications do so at their own risk and agree to fully indemnify MACOM for any damages resulting from such improper use or sale.

M/A-COM Technology Solutions Inc. (MACOM) and its affiliates reserve the right to make changes to the product(s) or information contained herein without notice.
Visit www.macom.com for additional data sheets and product information.

For further information and support please visit:
https://www.macom.com/support