Complementary Output Hall Effect Fan Driver

❖ GENERAL DESCRIPTION

MA7202 is integrated Hall sensors with output drivers, mainly designed for electronic commutation of brush-less DC Fan. This IC is using HV BCD process internally includes the regulator, protecting diode, Hall plate, amplifier, comparator, and a pair of complementary open-Drain outputs (DO, DOB).

While the magnetic flux density (B) is larger than operate point (Bop), DO will turn on (low), and meanwhile DOB will turn off (high). Each output is latched until B is lower than release point (Brp), and then DO, DOB transfer each state. For DC fan application, sometimes need to test power reverse connection condition. Internal diode only protects chip-side but not for coil-side. If necessary, add one external diode to block the reverse current from coil-side.

❖ FEATURES

- On-chip Hall effect sensor with two different sensitivity and hysteresis settings
- Built-in protecting diode only for chip reverse power connecting
- Wide operating voltage range: 3.5V~28V
- Output sink current up to 0.3A
- -40°C to 85°C operating temperature range
- Low Profile SIP-4L Package(Green and Lead Free)

❖ PIN ASSIGNMENT

The package of MA7202 is SIP-4L; the pin assignment is given by:

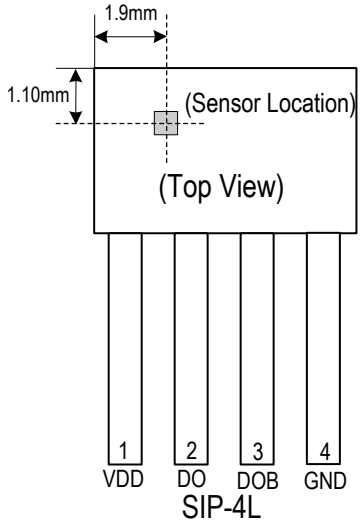

Name	Description
VDD	Supply Voltage
DO	Output 1
DOB	Output 2
GND	Ground.

❖ BLOCK DIAGRAM

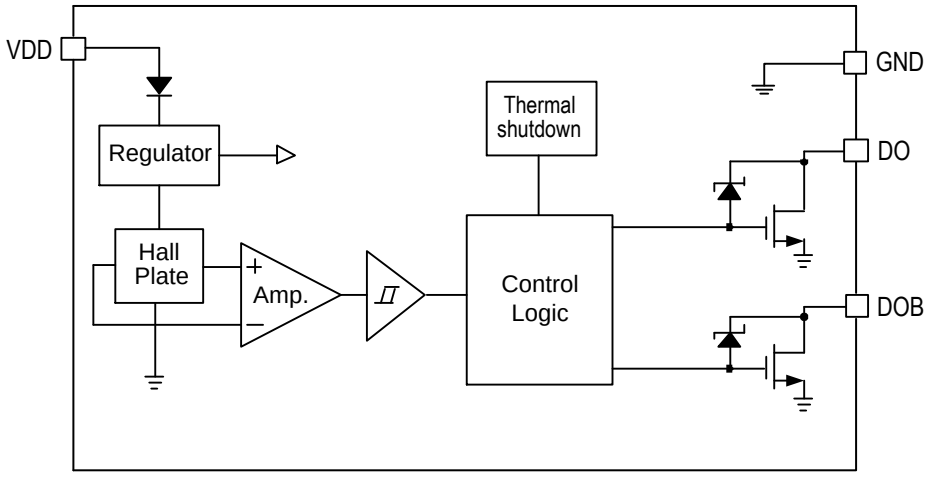

❖ RDER/MARKING INFORMATION

Order Information	Top Marking
MA7202XXX Package Type P4: SIP-4L Packing Blank: Bag	7202 → Part number Y Y WW X → ID code:internal WW:01~52 Year:15=2015

❖ A BSOLUTE MAXIMUM RATINGS (at T_A=25°C)

Characteristics		Symbol	Rating	Unit
Supply Voltage		V_{CC}	30	V
Reverse VCC Polarity Voltage		V_{RCC}	-30	V
Magnetic Flux Density		B	Unlimited	Gauss
Output Current	Continuous	I_O	300	mA
	Hold		500	
	Peak (start up)		700	
Power Dissipation		P_D	550	mW
Storage Temperature Range		T_{STG}	-65 to +150	°C
Junction Temperature		T_J	150	°C
Thermal Resistance from Junction to case		θ_{JC}	49	°C/W
Thermal Resistance from Junction to ambient		θ_{JA}	227	°C/W
Operating temperature Range		T_O	-40 to 85	°C

❖ ELECTRICAL CHARACTERISTICS

(V_{DD} = 12V, T_A = +25°C, unless otherwise noted.)

Characteristics	Symbol	Conditions	Min	Typ	Max	Units
Supply Voltage	V_{DD}	Operating	3.5	-	28	V
Supply current	I_{DD}	Operating	-	3.5	5	mA
Output Leakage Current	I_{OFF}	V_{OUT}=12V	-	< 0.1	10	μA
Output On resistance	$R_{DS(ON)}$	I_{OUT}=200mA	-	2.4	-	Ω
Output Clamping Voltage	V_Z	DO, DOB	-	58	-	V
Thermal shutdown Temp	T_{SD}		150	-	-	°C
Thermal Shutdown Hysteresis	T_{SH}		-	30	-	°C
Magnetic						(1mT=10 Gauss)
Operate Point	B_{OP}		5	30	50	Gauss
Release Point	B_{RP}		-50	-30	-5	Gauss
Hysteresis	B_{HYS}		-	60	-	Gauss

Driver output vs. magnetic pole

Characteristics	Test Conditions	DO	DOB
North pole	B < Brp	High	Low
South pole	B > Bop	Low	High

Note: The magnetic pole is applied facing the branded side of the package

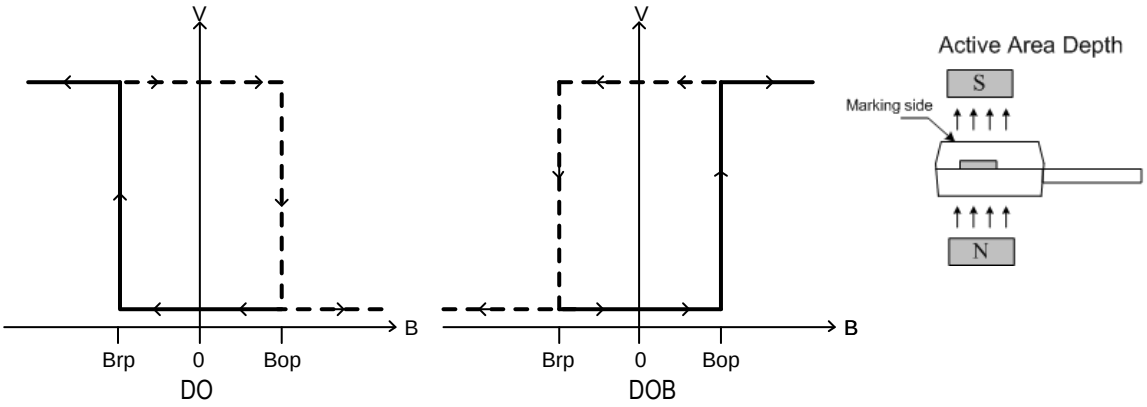

❖ APPLICATION CIRCUIT

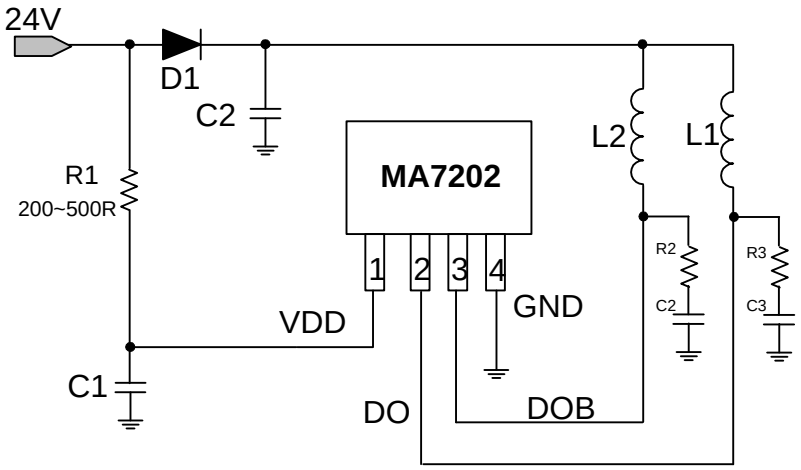

24V brush-less DC fan

Note1: C2(Optional) is for power stabilization, Recommended E-Cap 2.2uF/50V and D1 (Optional) is a reverse protect diode.
Note2: R1(1/8W 0805) and C1(100nF) : Enhance the reliability during hot swap.
Note3: Recommended to use a 47 ohm for R2 & R3 and a 1uF E-Cap for C2 & C3. These values may need to be optimized depending on the coil used.

❖ PERFORMANCE CHARACTERISTICS

T_A (°C)	**25**	**50**	**60**	**70**	**80**	**85**	**90**	**95**	**100**
PD (mW)	550	440	396	352	308	286	264	242	220
T_A (°C)	**105**	**110**	**115**	**120**	**125**	**130**	**135**	**140**	**150**
PD (mW)	198	176	154	132	110	88	66	44	0

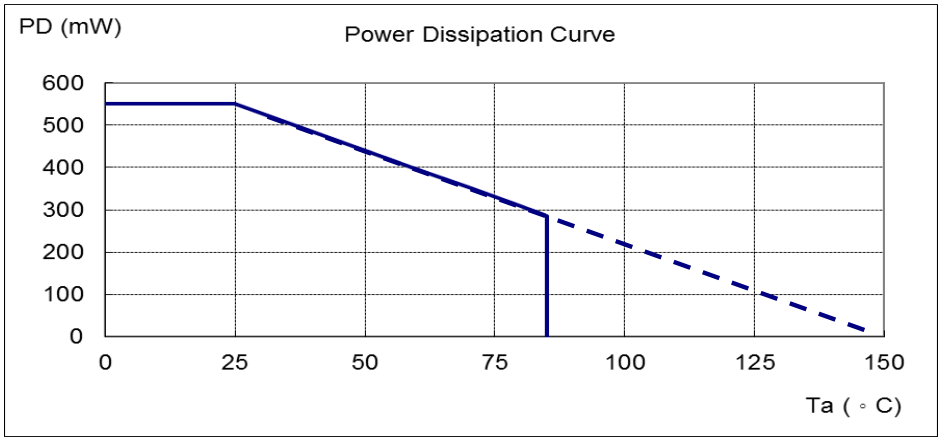

Active Area Depth

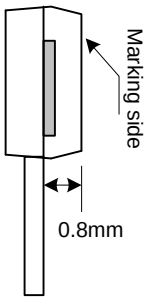

Package Sensor Location

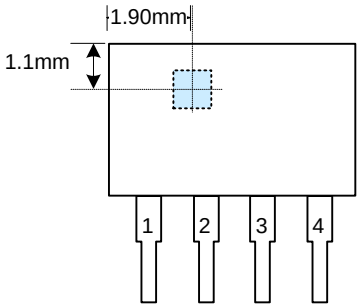

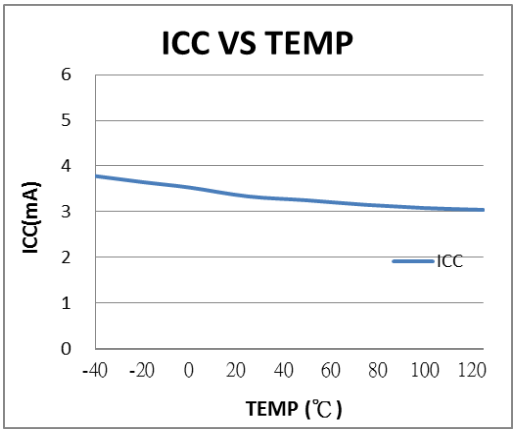

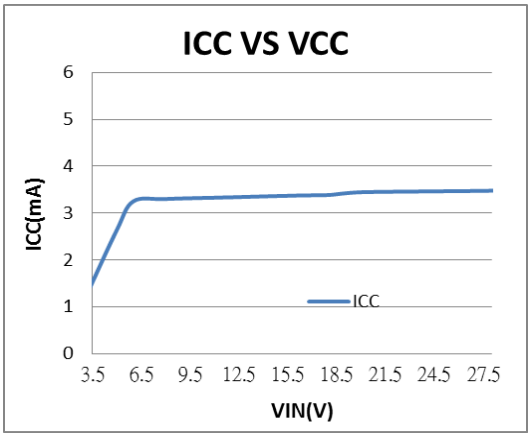

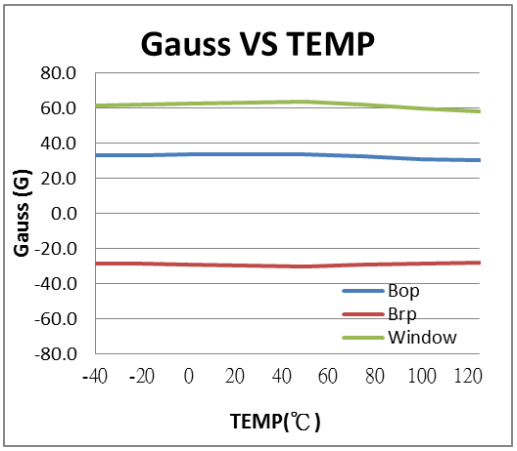

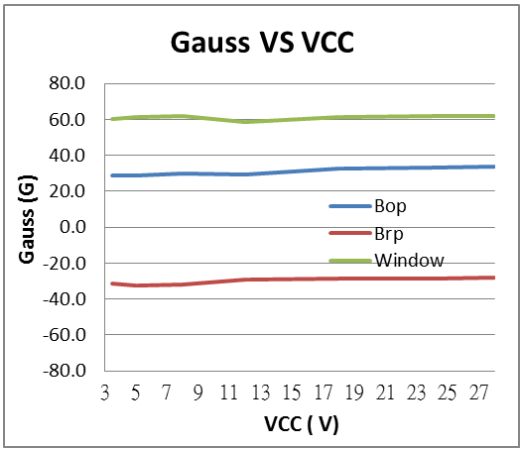

❖ PACKAGE OUTLINES

