38V Synchronous Buck Converter

❖ GENERAL DESCRIPTION

The MA5601 is a monolithic synchronous buck regulator. The device integrates two internal power MOSFETs, and provides 2.5A of continuous load current over a wide input voltage of 8V to 38V. Current mode control provides fast transient response and cycle-by-cycle current limit.

An internal soft-start prevents inrush current at turn-on, This device, available in SOP8L-EP(Exposed pad) package, provides a very compact solution with minimal external components.

❖ FEATURES

- Wide 8V to 38V Operating Input Range
- Integrated 140mΩ Power MOSFET Switches
- Output Adjustable from VFB(1.00V±2%) to 20V
- Up to 93% Efficiency
- Internal Soft-Start and Fixed 160KHz Frequency
- Stable with Low ESR Polymer Al-E-Capacitors
- Cycle-by-Cycle Over Current Protection
- Input Under/Over Voltage Lockout

❖ APPLICATION CIRCUIT

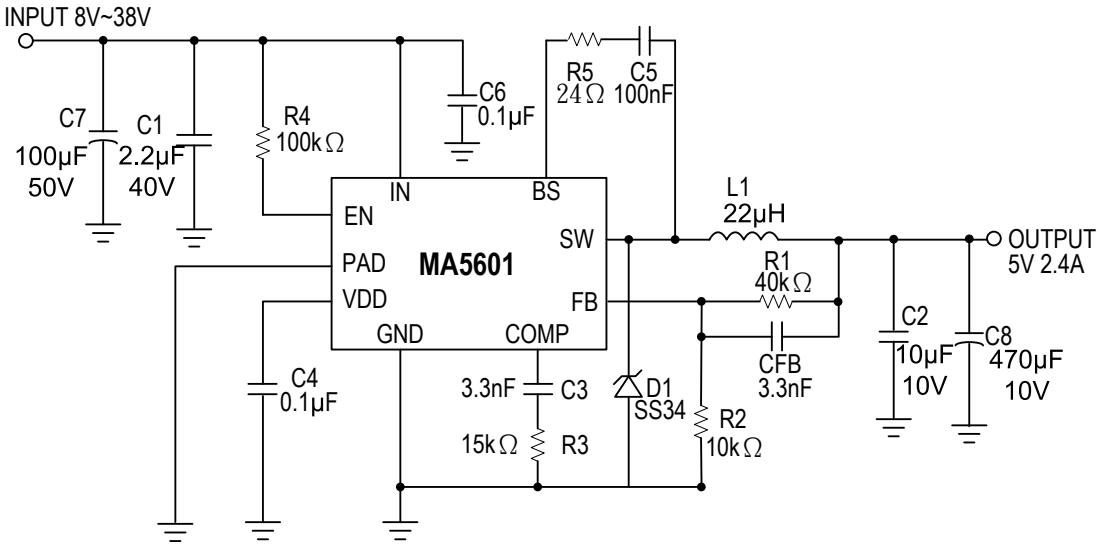

$V_{OUT}=V_{FB} \times (1+R1/R2)$, V_{FB} = 1.00V, R2 suggest 1k~30kΩ

❖ PIN ASSIGNMENT

The package of MA5601 is SOP8L-EP(Exposed pad); the pin assignment is given by:

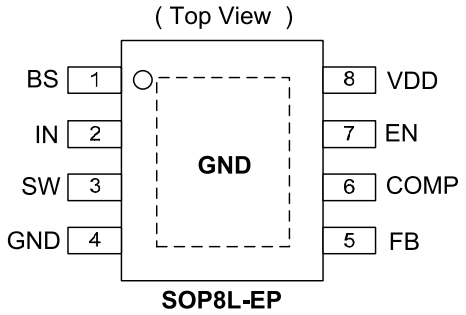

Name	Description
BS	Boot-Strap Pin. Supply high side gate driver. Decouple this pin to LX pin with 24ohm + 0.1uF ceramic cap.
IN	Power Input pin. Bypass IN to GND with a suitably large capacitor to eliminate noise on the input to the IC.
SW	Power Switching Output. SW is the switching node that supplies power to the output. Connect the output LC filter from SW to the output load.
GND	Ground.
PAD	Ground (Connect to GND).
FB	Feedback Input. FB senses the output voltage to regulate that voltage. Drive FB with a resistive voltage divider from the output voltage.
COMP	Compensation Node. COMP is used to compensate the regulation control loop. Connect a series RC network from COMP to GND to compensate the regulation control loop.
EN	Enable control. Pull high to turn on. Do not float.
VDD	Internal regulator pin

❖ ORDER/MARKING INFORMATION

Order Information	Top Marking (SOP-8L)
MA5601 XX X → Packing Blank: Tube A : Taping Package Type ES: SOP8L-EP	Logo ← MA5601 → Part number XXXX → ID code:internal → WW:01~52 → Year:12=2012

❖ BLOCK DIAGRAM

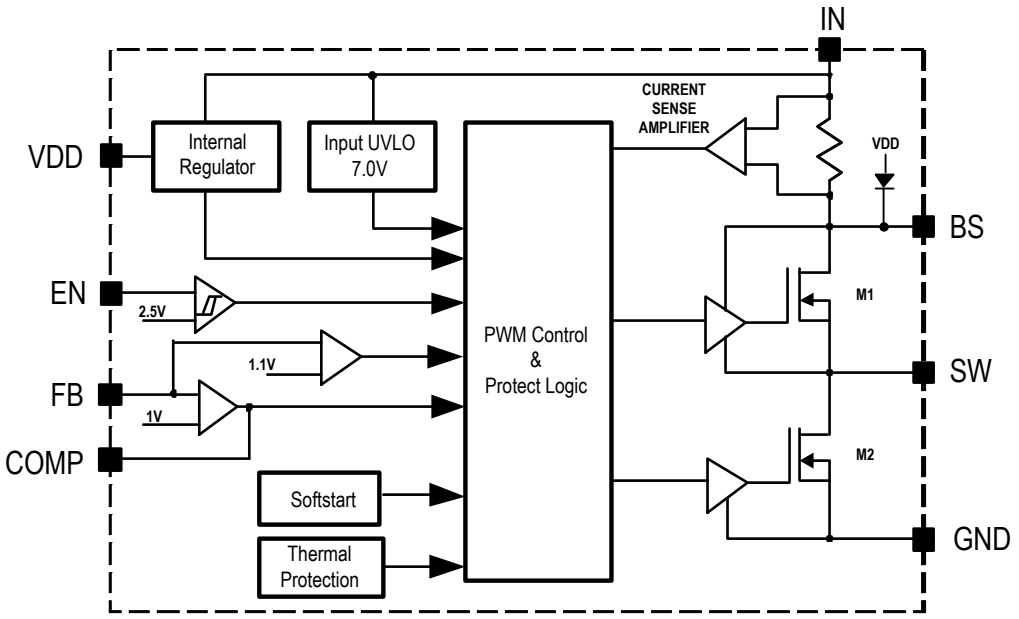

❖ ABSOLUTE MAXIMUM RATINGS (at T_A=25°C)

Characteristics	Symbol	Rating	Unit
Supply Voltage	V_{IN}	–0.3 to +42	V
Switch Node Voltage	V_{SW}	– 0.3 to V_{IN} + 0.3	V
Boost Voltage	V_{BS}	VSW – 0.3 to VSW + 6	V
All Other Pins		–0.3 to +6	V
Lead Temperature		260	°C
Storage Temperature		–65 to +150	°C
Junction Temperature	T_J	150	°C
Output Voltage	V_{OUT}	VFB to 20	V
Ambient Operating Temperature		–40 to +85	°C
Thermal Resistance from Junction to case	θ_{JC}	15	°C/W
Thermal Resistance from Junction to ambient	θ_{JA}	40	°C/W

Note: θ_{JA} is measured with the PCB copper area of approximately 1 in^2(Multi-layer). That need connect to exposed pad.

❖ ELECTRICAL CHARACTERISTICS

(V_{IN} = 12V, T_A = +25°C, unless otherwise noted.)

Characteristics	Symbol	Conditions	Min	Typ	Max	Units
Input Voltage Range			8	-	38	V
Shutdown Supply Current	I_{SD}	V_{EN} = 0V	-	0.7	1.3	mA
Quiescent Current	I_{CCQ}	V_{EN} = 5.0V; V_{FB} = 1.05V	-	0.7	1.5	mA
Feedback Voltage	V_{FB}	8V ≤ V_{IN} ≤ 38V	0.98	1.00	1.02	V
Feedback Overvoltage Threshold	$OVP_{(FB)}$		-	1.1X	-	V_{FB}
High-Side Switch On Resistance (Note)	$R_{DS(ON)1}$		-	150	-	mΩ
Low-Side Switch On Resistance (Note)	$R_{DS(ON)2}$		-	140	-	mΩ
High-Side Switch Leakage Current		V_{EN} = 0V, V_{SW} = 0V	-	-	10	μA
Upper Switch Current Limit		Minimum Duty Cycle	2.9	3.5	-	A
Lower Switch Current Limit		From Drain to Source	-	0.9	-	A
Oscillation Frequency	F_{OSC1}		-	160	-	KHz
Short Circuit Oscillation Frequency	F_{OSC2}	V_{FB} =< 0.5V	-	60	-	KHz
Maximum Duty Cycle	D_{MAX}		-	90	-	%
Minimum On Time (Note)	$T_{ON(min)}$		-	220	-	ns
EN Lockout Threshold Voltage	$ENH_{(LOCK)}$		-	2.5	-	V
EN Lockout Hysterisis			-	210	-	mV
Input Under Voltage Lockout Threshold	UVLO	V_{IN} Rising	6.5	7.0	7.5	V
Input Under Voltage Lockout Threshold Hysteresis	UVLO-Hys		-	800	-	mV
Input Over Voltage Lockout Threshold	OVLO	V_{IN} Rising	-	40	-	V
Input Over Voltage Lockout Threshold Hysteresis	OVLO-Hys		-	5	-	V
Soft-Start Period			-	3	-	ms
Thermal Shutdown	T_{SD}		-	150	-	°C
Thermal Shutdown Hysterisis	T_{SH}		-	30	-	°C

Note: Guaranteed by design.

❖ FUNCTION DESCRIPTIONS

The MA5601 is a synchronous rectified, current-mode, step-down regulator. It regulates input voltages from 8V to 38V down to an output voltage as low as V_{FB}, and supplies up to 2.5A of load current.

The MA5601 uses current-mode control to regulate the output voltage. The output voltage is measured at FB through a resistive voltage divider and amplified through the internal Tran conductance error amplifier. The voltage at the COMP pin is compared to the switch current measured internally to control the output voltage.

The converter uses internal N-Channel MOSFET switches to step-down the input voltage to the regulated output voltage. Since the high side MOSFET requires a gate voltage greater than the input voltage, a boost capacitor connected between SW and BS is needed to drive the high side gate. The boost capacitor is charged from the internal 5V rail when SW is low.

When the MA5601 FB pin exceeds 10% of the nominal regulation voltage of V_{FB}, the over voltage comparator is tripped and the COMP pin is discharged to GND, forcing the high-side switch off.

❖ APPLICATION INFORMATION

COMPONENT SELECTION

Setting the Output Voltage

The output voltage is set using a resistive voltage divider from the output voltage to FB pin. The voltage divider divides the output voltage down to the feedback voltage by the ratio. Thus the output voltage is:

$$V_{OUT} = V_{FB} \times \frac{R1 + R2}{R2}$$

For example, V_{FB} =1.00V for a 5.0V output voltage, R2 is 10kΩ, and R1 is 40kΩ.

Inductor Selection

The inductor is required to supply constant current to the output load while being driven by the switched input voltage. A larger value inductor will result in less ripple current that will result in lower output ripple voltage. However, the larger value inductor will have a larger physical size, higher series resistance, and/or lower saturation current. A good rule for determining the inductance to use is to allow the peak-to-peak ripple current in the inductor to be approximately 30% of the maximum switch current limit.

VIN	<28V	<35V
Inductor	33uH	22uH

The choice of which style inductor to use mainly depends on the price vs. size requirements and any EMI requirements.

❖ TYPICAL CHARACTERISTICS

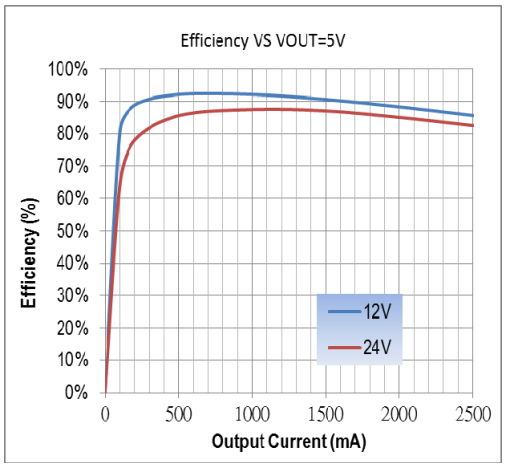

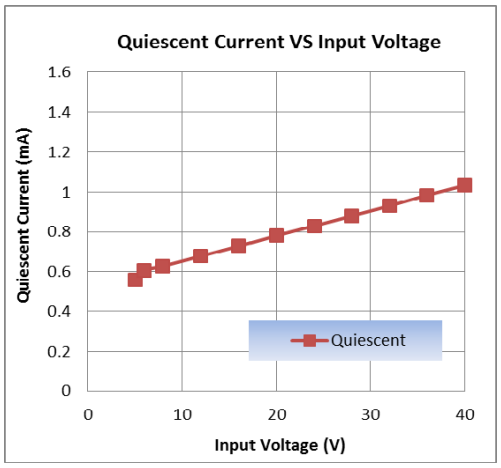

Power On : V_{IN} = 12V, V_{OUT} = 5V, I_{LOAD} = 0A

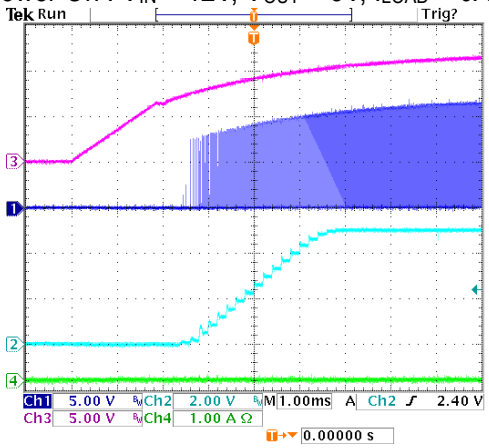

Ch1=SW , Ch2=V_{OUT} ,Ch3=V_{IN} , Ch4=I_{OUT}

Power On : V_{IN} = 12V, V_{OUT} = 5V, I_{LOAD} = 2A

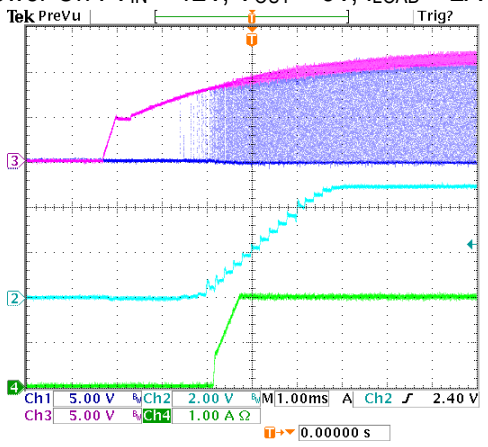

Ch1=SW , Ch2=V_{OUT} ,Ch3=V_{IN} , Ch4=I_{OUT}

Cable On : V_{IN} = 12V, V_{OUT} = 5V, I_{LOAD} = 2A

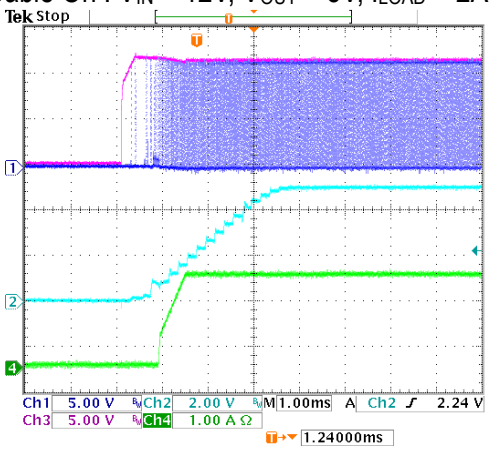

Ch1=SW , Ch2=V_{OUT} ,Ch3=V_{IN} , Ch4=I_{OUT}

V_{IN} = 12V, V_{OUT} = 5V, I_{LOAD} = 2A,160kHz

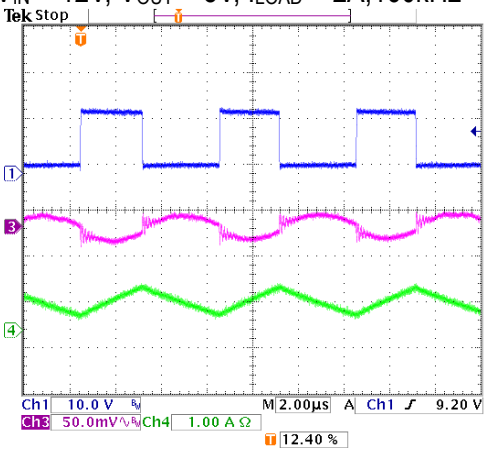

Ch1=SW , Ch3=V_{IN} , Ch4=I_{SW}

❖ PACKAGE OUTLINES

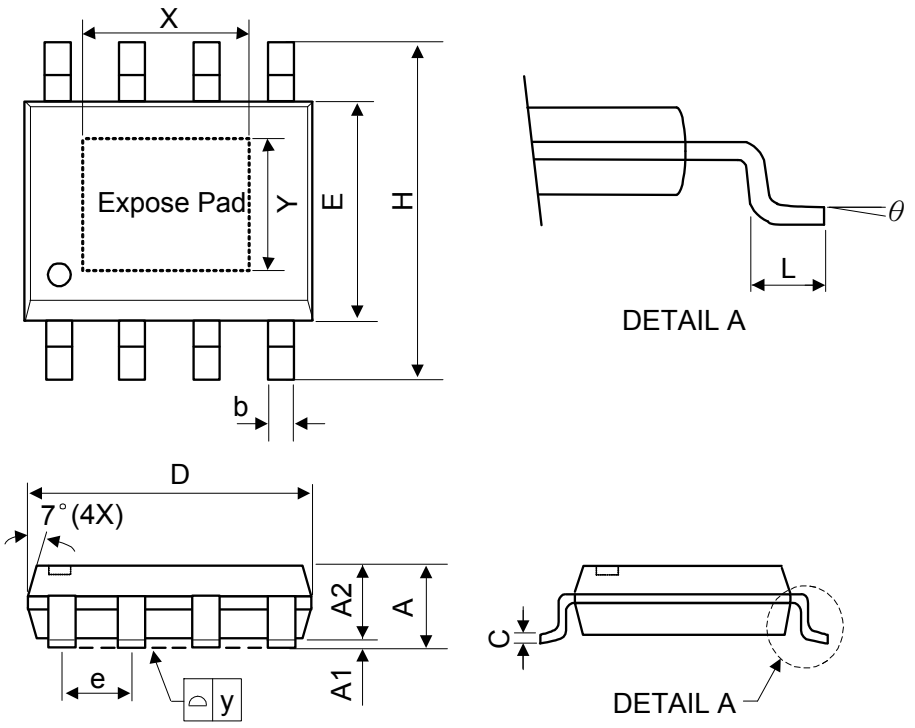

❖

❖

Symbol	Dimensions in Millimeters			Dimensions in Inches		
	Min.	Nom.	Max.	Min.	Nom.	Max.
A	-	-	1.75	-	-	0.069
A1	0	-	0.15	0	-	0.06
A2	1.25	-	-	0.049	-	-
C	0.1	0.2	0.25	0.0075	0.008	0.01
D	4.7	4.9	5.1	0.185	0.193	0.2
E	3.7	3.9	4.1	0.146	0.154	0.161
H	5.8	6	6.2	0.228	0.236	0.244
L	0.4	-	1.27	0.015	-	0.05
b	0.31	0.41	0.51	0.012	0.016	0.02
e	1.27 BSC			0.050 BSC		
y	-	-	0.1	-	-	0.004
X	-	2.34	3.33	-	0.092	0.131
Y	-	2.34	2.54	-	0.092	0.10
θ	0°	-	8°	0°	-	8°

❖ Mold flash shall not exceed 0.25mm per side
❖ JEDEC outline: MS-012 BA