KILOVOLT™ Series

2000 Volt & 3000 Volt PIN Diodes
MA4PK200X & MA4PK300X

Rev. 10

Features

- Reverse Voltage up to 3000 Volts
- 25 Ampere Current Rating
- Designed for HF, Multi-Throw Kilowatt Switches
- Low Loss, Low Distortion
- Rugged, Hermetically Sealed Packaging
- Convenient Solder Lug Attachment
- Non Magnetic to 3 Tesla for MRI Applications
- RoHS Compliant

Description

M/A-COM Technology Solutions KILOVOLT™ PIN diode series utilize modern semiconductor and packaging technology that assures low loss, low distortion, and reliable performance in multi-kilowatt switch applications at frequencies as low as 1 MHz. The PIN chips employed have low resistance, high power dissipation and very high stand-off voltage capability. KILOVOLT™ PIN diodes employ ultra high resistively, long carrier lifetime, float zone material onto which P+ and N+ regions are deposited using an epitaxial process designed by M/A-COM Technology Solutions for high voltage PIN diodes. This process results in better preservation of the carrier lifetime and superior layer to layer interface when compared to a conventional double diffused process. The processing of the I-region width is tightly controlled using modern lapping techniques. KILOVOLT™ PIN diode chips utilize M/A-COM Technology Solutions proprietary Cermachip™ glass passivation. The hard glass covers all exposed junction and intrinsic surfaces. This results in a hermetically sealed, passivated chip that has been used in many high reliability military and commercial programs.

Applications

The KILOVOLT™ PIN diode series is designed for use as high power switching elements in multi-kilowatt HF and VHF applications. These PIN diodes have been extensively characterized for their electrical and thermal properties to assure predictable, low loss, high power handling and low distortion performance. Some typical applications are as follows:

- Filter Switches
- Antenna Couplers
- Power Amplifier By-pass Switches
- MRI Switches

Package Outlines

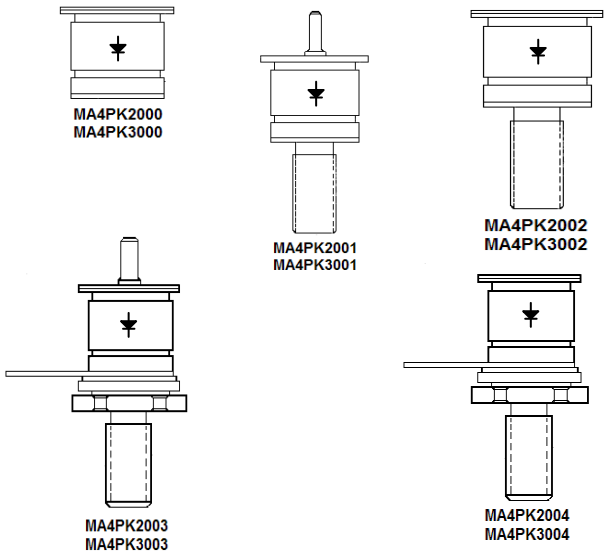

Packaging

The metal-ceramic packages were developed specifically for the KILOVOLT™ PIN diode series. The packages are designed to withstand extremely high voltages and currents. The packages meet the environmental requirements of MIL-STD-202 and MIL-STD750. The PIN diode chip is bonded to the package and the anode strap is bonded to the chip at temperatures exceeding 300°C. The anode strap has a unique, large cross-sectional area allowing for high current carrying capability. The packages are sealed using a projection welding technique in an inert environment. KILOVOLT™ PIN diodes are available with a solder lug on the anode electrode to allow for a convenient and reliable wrap-around

Diode Part Numbers & Package Style

2000 Volts	3000 Volts	Package Style
MA4PK2000	MA4PK3000	Pill
MA4PK2001	MA4PK3001	Threaded Stud & Solder Lug
MA4PK2002	MA4PK3002	Threaded Stud Only
MA4PK2003	MA4PK3003	Insulated Threaded Stud & Solder Lug
MA4PK2004	MA4PK3004	Insulated Threaded Stud Only

M/A-COM Technology Solutions Inc. (MACOM) and its affiliates reserve the right to make changes to the product(s) or information contained herein without notice.
Visit www.macom.com for additional data sheets and product information.

For further information and support please visit:
https://www.macom.com/support

ABSOLUTE MAXIMUM RATINGS		MAXIMUM POWER DISSIPATION @ T_{CASE} = 25°C	
Operating and Storage Temp.	-65°C to +175°C	MA4PK2001 MA4PK2002	50 Watts
Installation Temperature	250°C/30 Seconds	MA4PK2003 MA4PK2004	37.5 Watts
Instantaneous Reverse Voltage	Voltage Rating	MA4PK3001 MA4PK3002	75 Watts
Forward Current (RF and DC)	25 Amperes	MA4PK3003 MA4PK3004	50 Watts
ESD	Class 1C, HBM		

Electrical Specifications[1] @ T_A = 25°C

PARAMETER	CONDITION	MA4PK2000 Series	MA4PK3000 Series
Reverse Voltage (Max) V_R	10 µA	2000 Volts	3000 Volts
Series Resistance (Max) R_S	F = 4 MHz, I = 0.5 A	0.20 Ω	0.25 Ω
Series Resistance (Typ.) R_S	F = 1.0 -100 MHz, I = 0.5 A	0.10 Ω	0.15 Ω
Total Capacitance (Max) C_T	F = 1 MHz, V = 100 V	3.2 pF	4.0 pF
Parallel Resistance (Typ.) R_P	F =100 MHz, V = 0 V	5K Ω	10K Ω
Carrier Lifetime (Min) T_L	IF = 10 mA	30 µs	65 µs
Forward Voltage (Max) V_F	IF = 1 A	1.2 V	1.2 V
Thermal Resistance (Max) Ø		3°C/W (Stud) 4°C/W (Ins Stud)	2°C/W (Stud) 3°C/W (Ins Stud)
I-Region Width (Nom)		200 µm	325 µm

1. Specifications Subject to Change Without Notice.

M/A-COM Technology Solutions Inc. (MACOM) and its affiliates reserve the right to make changes to the product(s) or information contained herein without notice.
Visit www.macom.com for additional data sheets and product information.

For further information and support please visit:
https://www.macom.com/support

Typical Performance Curves @ +25°C

Series Resistance vs. Current @ 100MHz
(MA4PK2000 & MA4PK3000 Series)

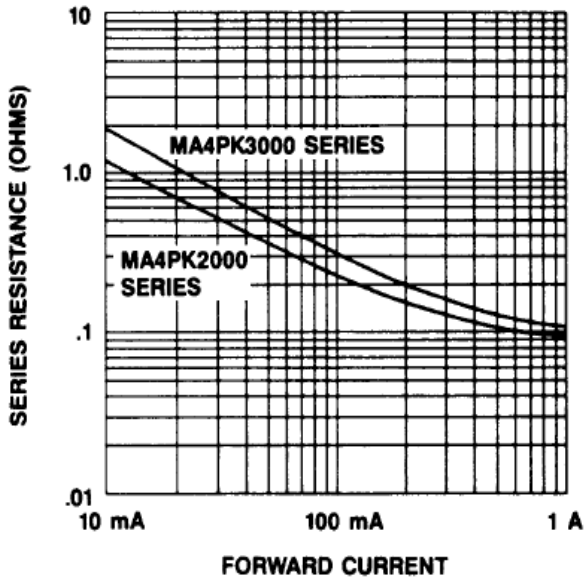

Forward Voltage vs. Forward Current
(MA4PK2000 & MA4PK3000 Series)

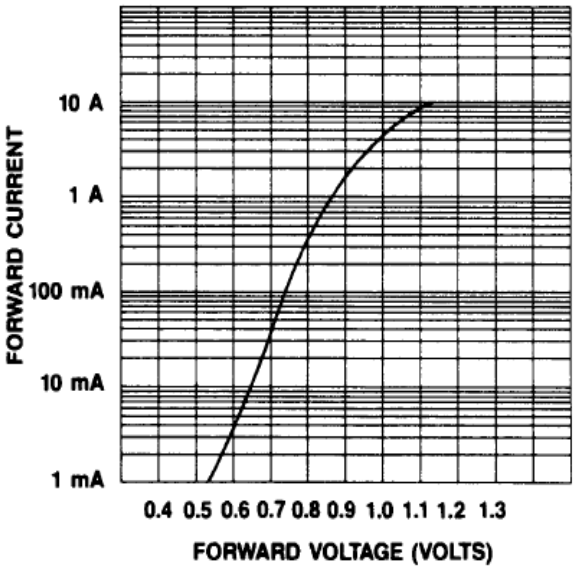

Capacitance vs. Frequency & Reverse Voltage
(MA4PK2000 Series)

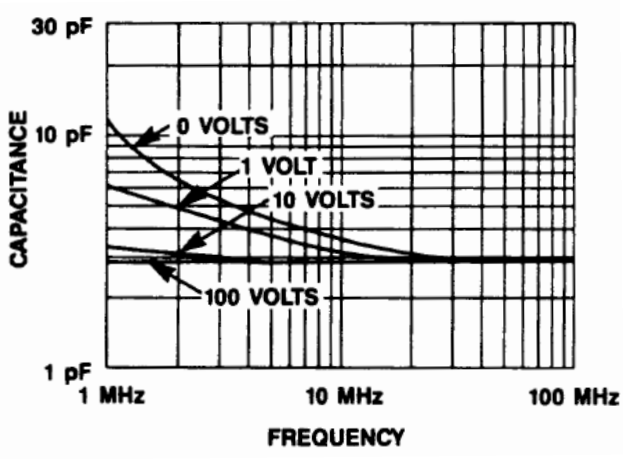

Capacitance vs. Frequency & Reverse Voltage
(MA4PK3000 Series)

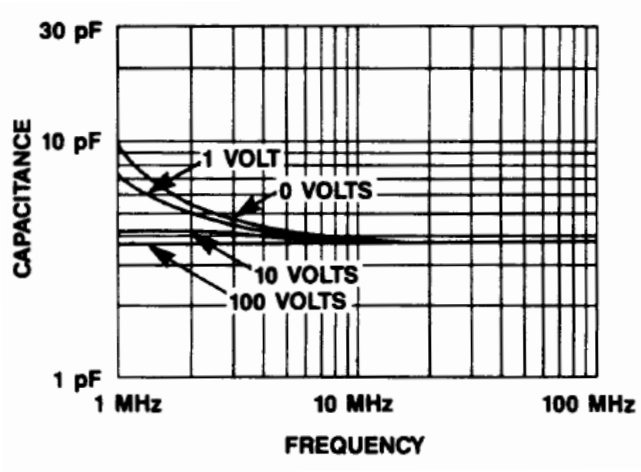

M/A-COM Technology Solutions Inc. (MACOM) and its affiliates reserve the right to make changes to the product(s) or information contained herein without notice.
Visit www.macom.com for additional data sheets and product information.

For further information and support please visit:
https://www.macom.com/support

Typical Performance Curves @ 25°C

Conductance vs. Frequency & Reverse Voltage (MA4PK2000 SERIES)

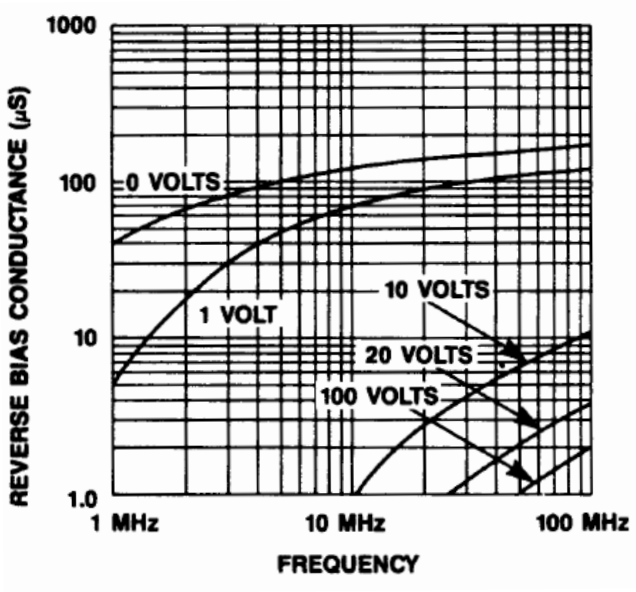

Conductance vs. Frequency & Reverse Voltage (MA4PK3000 SERIES)

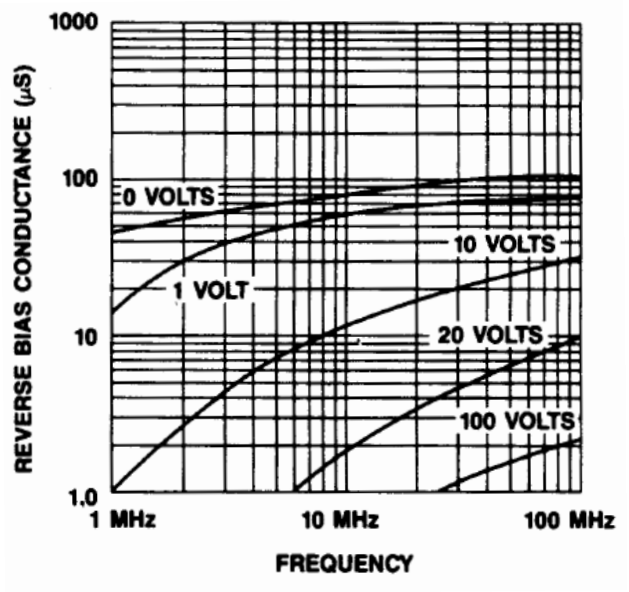

Carrier Lifetime vs. Forward Current

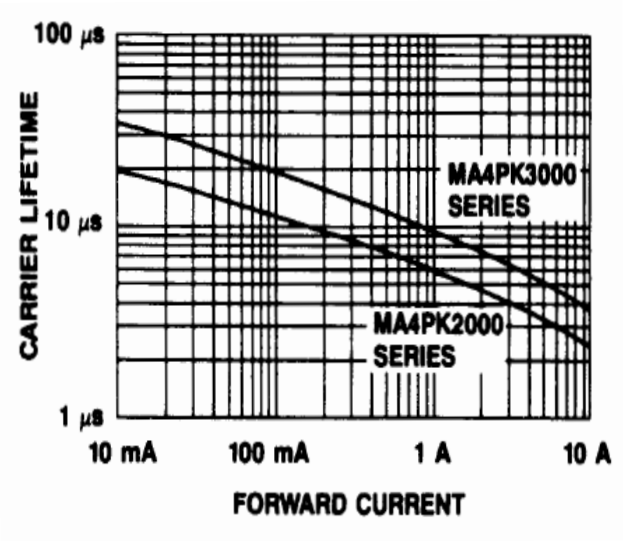

Pulsed Thermal Resistance

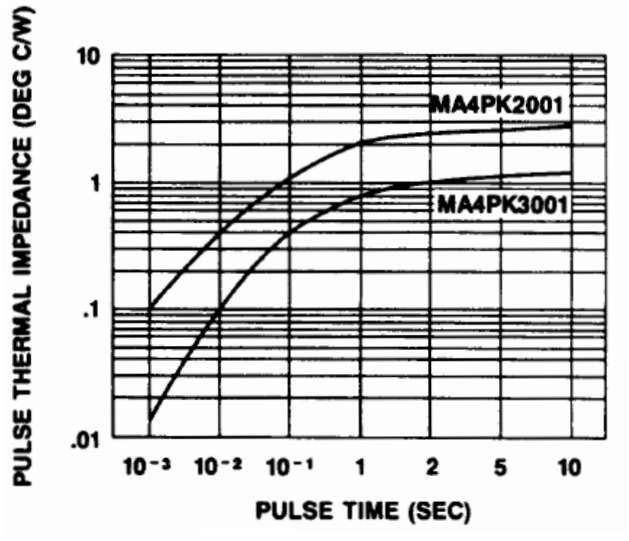

M/A-COM Technology Solutions Inc. (MACOM) and its affiliates reserve the right to make changes to the product(s) or information contained herein without notice.
Visit www.macom.com for additional data sheets and product information.

For further information and support please visit:
https://www.macom.com/support

Case Styles ● Black Dot Denotes Cathode

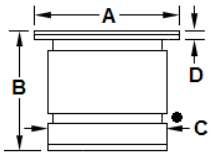

DIM	MA4PK2000 CASE STYLE 1027				MA4PK3000 CASE STYLE 1073			
	INCHES		MILLIMETERS		INCHES		MILLIMETERS	
	MIN	MAX	MIN	MAX	MIN	MAX	MIN	MAX
A	0.304	0.316	7.72	8.02	0.468	0.485	11.90	12.30
B	0.286	0.292	7.26	7.42	0.387	0.411	9.83	10.40
C	0.245	0.255	6.22	6.48	0.390	0.400	9.90	10.10
D	0.023	0.031	0.58	0.79	0.028	0.042	0.71	1.06
	C_P = .45 pF		L_S = 2 nH		C_P = .75 pF		L_S = 3 nH	

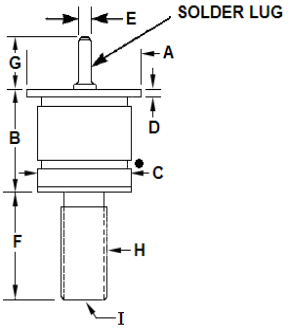

DIM	MA4PK2001 CASE STYLE 1082				MA4PK3001 CASE STYLE 1084			
	INCHES		MILLIMETERS		INCHES		MILLIMETERS	
	MIN	MAX	MIN	MAX	MIN	MAX	MIN	MAX
A	0.304	0.316	7.72	8.02	0.468	0.485	11.90	12.30
B	0.286	0.292	7.26	7.42	0.387	0.411	9.83	10.40
C	0.245	0.255	6.22	6.48	0.390	0.400	9.90	10.10
D	0.023	0.031	0.58	0.79	0.028	0.042	0.71	1.06
E	0.060	0.065	1.52	1.65	0.060	0.065	1.52	1.65
F	0.281	0.305	7.14	7.75	0.425	0.445	10.80	11.30
G	0.190	0.205	4.83	5.21	0.190	0.205	4.83	5.21
H	6-40 UNF-3A				10-32 UNF-2A			
I	.072 SPLINE X .070 DP				0.50 SLOT X .060 DP			
	C_P = .45 pF		L_S = 2 nH		C_P = .75 pF		L_S = 3 nH	

M/A-COM Technology Solutions Inc. (MACOM) and its affiliates reserve the right to make changes to the product(s) or information contained herein without notice.
Visit www.macom.com for additional data sheets and product information.

For further information and support please visit:
https://www.macom.com/support

Case Styles ● Black Dot Denotes Cathode

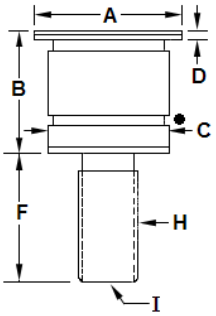

DIM	MA4PK2002 CASE STYLE 1048				MA4PK3002 CASE STYLE 1074			
	INCHES		MILLIMETERS		INCHES		MILLIMETERS	
	MIN	MAX	MIN	MAX	MIN	MAX	MIN	MAX
A	0.304	0.316	7.72	8.02	0.468	0.485	11.90	12.30
B	0.286	0.292	7.26	7.42	0.387	0.411	9.83	10.40
C	0.245	0.255	6.22	6.48	0.390	0.400	9.90	10.10
D	0.023	0.031	0.58	0.79	0.028	0.042	0.71	1.06
F	0.281	0.305	7.14	7.75	0.425	0.445	10.80	11.30
H	6-40 UNF-3A				10-32 UNF-2A			
I	.072 SPLINE X .070 DP				0.50 SLOT X .060 DP			
	C_P = .45 pF		L_S = 2 nH		C_P = .75 pF		L_S = 3 nH	

M/A-COM Technology Solutions Inc. (MACOM) and its affiliates reserve the right to make changes to the product(s) or information contained herein without notice.
Visit www.macom.com for additional data sheets and product information.

For further information and support please visit:
https://www.macom.com/support

Case Styles ● Black Dot Denotes Cathode

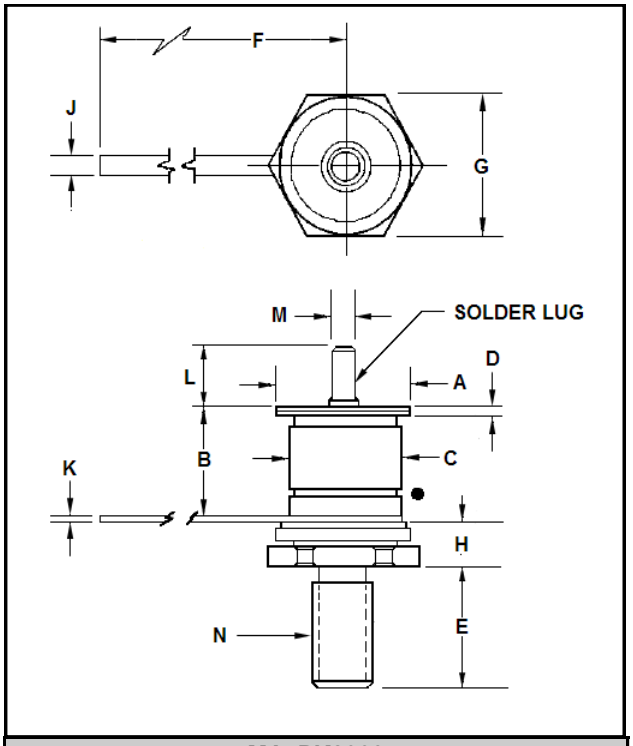

MA4PK2003				
CASE STYLE 1080				
DIM	INCHES		MILLIMETERS	
	MIN	MAX	MIN	MAX
A	.304	.316	7.72	8.02
B	.254	.270	6.45	6.86
C	.245	.255	6.22	6.48
D	.023	.031	0.58	0.79
E	.221	.252	5.61	6.40
F	.780	.790	19.8	20.1
G	.245	.255	6.22	6.48
H	.128	.137	3.25	3.48
J	.120	.130	3.05	3.30
K	.007	.009	0.18	0.23
L	.190	.205	4.83	5.21
M	.060	.065	1.52	1.65
N	6-32 UNF-3A			
C_{GND} = 1.1Pf	C_P = .45 Pf		L_S = 2 nH	

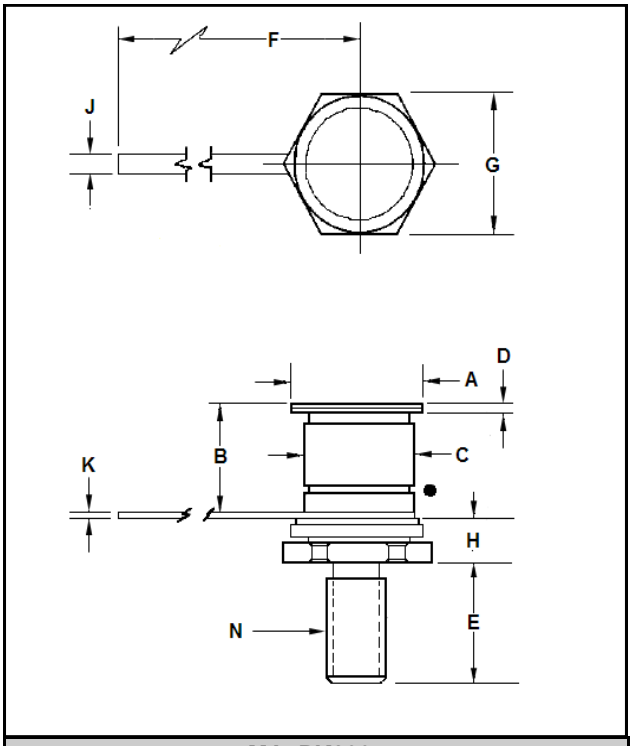

MA4PK2004				
CASE STYLE 1038				
DIM	INCHES		MILLIMETERS	
	MIN	MAX	MIN	MAX
A	.304	.316	7.72	8.02
B	.254	.270	6.45	6.86
C	.245	.255	6.22	6.48
D	.023	.031	0.58	0.79
E	.221	.252	5.61	6.40
F	.780	.790	19.8	20.1
G	.245	.255	6.22	6.48
H	.128	.137	3.25	3.48
J	.120	.130	3.05	3.30
K	.007	.009	0.18	0.23
N	6-32 UNF-3A			
C_{GND} = 1.1Pf	C_P = .45 Pf		L_S = 2 nH	

M/A-COM Technology Solutions Inc. (MACOM) and its affiliates reserve the right to make changes to the product(s) or information contained herein without notice.
Visit www.macom.com for additional data sheets and product information.

For further information and support please visit:
https://www.macom.com/support

Case Styles ● Black Dot Denotes Cathode

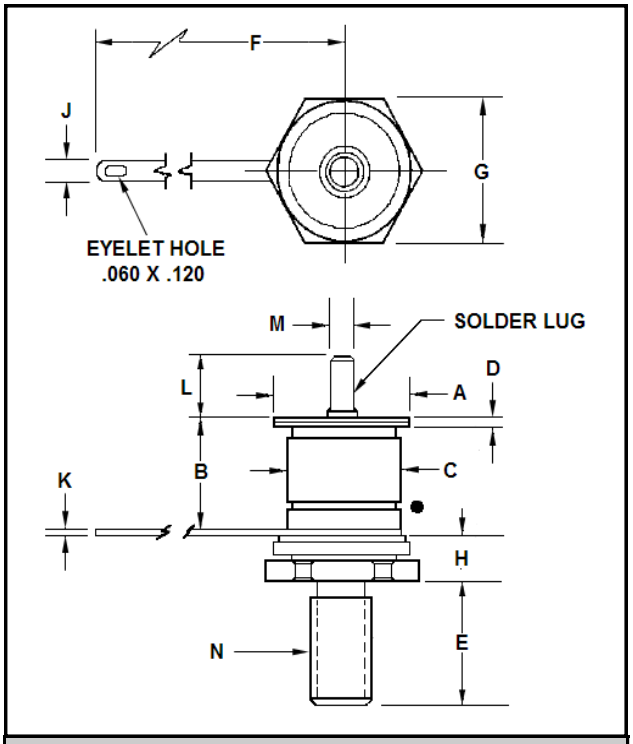

MA4PK3003				
CASE STYLE 1085				
DIM	INCHES		MILLIMETERS	
	MIN	MAX	MIN	MAX
A	.468	.485	11.9	12.3
B	.385	.410	9.8	10.4
C	.390	.400	9.90	10.1
D	.030	.045	0.76	1.14
E	.422	.452	10.72	11.48
F	.805	.820	20.45	20.83
G	.490	.500	12.45	12.70
H	.155	.175	3.94	4.45
J	.120	.130	3.05	3.30
K	.022	.026	.559	.660
L	.190	.205	4.83	5.21
M	.060	.065	1.52	1.65
N	10-32 UNF-2A			
C_{GND} = 1.1Pf	C_P = .75 Pf		L_S = 3 nH	

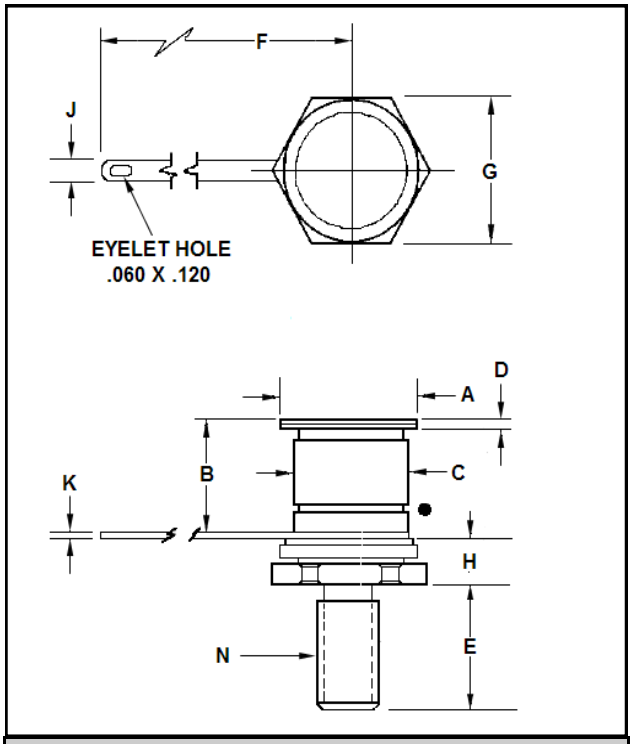

MA4PK3004				
CASE STYLE 1075				
DIM	INCHES		MILLIMETERS	
	MIN	MAX	MIN	MAX
A	.468	.485	11.9	12.3
B	.385	.410	9.8	10.4
C	.390	.400	9.90	10.1
D	.030	.045	0.76	1.14
E	.422	.452	10.72	11.48
F	.805	.820	20.45	20.83
G	.490	.500	12.45	12.70
H	.155	.175	3.94	4.45
J	.120	.130	3.05	3.30
K	.022	.026	.559	.660
N	10-32 UNF-2A			
C_{GND} = 1.1Pf	C_P = .75 Pf		L_S = 3 nH	

M/A-COM Technology Solutions Inc. (MACOM) and its affiliates reserve the right to make changes to the product(s) or information contained herein without notice.
Visit www.macom.com for additional data sheets and product information.

For further information and support please visit:
https://www.macom.com/support

M/A-COM Technology Solutions Inc. All rights reserved.

Information in this document is provided in connection with M/A-COM Technology Solutions Inc ("MACOM") products. These materials are provided by MACOM as a service to its customers and may be used for informational purposes only. Except as provided in MACOM's Terms and Conditions of Sale for such products or in any separate agreement related to this document, MACOM assumes no liability whatsoever. MACOM assumes no responsibility for errors or omissions in these materials. MACOM may make changes to specifications and product descriptions at any time, without notice. MACOM makes no commitment to update the information and shall have no responsibility whatsoever for conflicts or incompatibilities arising from future changes to its specifications and product descriptions. No license, express or implied, by estoppels or otherwise, to any intellectual property rights is granted by this document.

THESE MATERIALS ARE PROVIDED "AS IS" WITHOUT WARRANTY OF ANY KIND, EITHER EXPRESS OR IMPLIED, RELATING TO SALE AND/OR USE OF MACOM PRODUCTS INCLUDING LIABILITY OR WARRANTIES RELATING TO FITNESS FOR A PARTICULAR PURPOSE, CONSEQUENTIAL OR INCIDENTAL DAMAGES, MERCHANTABILITY, OR INFRINGEMENT OF ANY PATENT, COPYRIGHT OR OTHER INTELLECTUAL PROPERTY RIGHT. MACOM FURTHER DOES NOT WARRANT THE ACCURACY OR COMPLETENESS OF THE INFORMATION, TEXT, GRAPHICS OR OTHER ITEMS CONTAINED WITHIN THESE MATERIALS. MACOM SHALL NOT BE LIABLE FOR ANY SPECIAL, INDIRECT, INCIDENTAL, OR CONSEQUENTIAL DAMAGES, INCLUDING WITHOUT LIMITATION, LOST REVENUES OR LOST PROFITS, WHICH MAY RESULT FROM THE USE OF THESE MATERIALS.

MACOM products are not intended for use in medical, lifesaving or life sustaining applications. MACOM customers using or selling MACOM products for use in such applications do so at their own risk and agree to fully indemnify MACOM for any damages resulting from such improper use or sale.