AlGaAs PIN Diode
High Isolation SPST Switch

V 1.00

MA4AGSW900-287T

Features

- 31 dB Isolation @ 0 Volts @ 3 GHz
- 0.8 dB Loss @ 10 mA @ 3 GHz
- < 10 nS Switching Speed
- Useable from 50 MHz to 6.0 GHz

Description

M/A-COM's MA4AGSW900-287T is a Gallium Arsenide SPST PIN Diode Switch that makes use of Series Diodes featuring Lower Loss, Higher Isolation and Faster Switching Speed. This device is fabricated on OMCVD epitaxial wafers using a process designed for high device uniformity and extremely low parasitics. The switch die is fully passivated with silicon nitride and has an additional layer of a polymer for scratch and impact protection. This protective polymer coating provides additional moisture protection to the SOT-23 assembly.

Applications

The small 20 fF capacitance, and the low 3.0 Ω " ON " resistance of the GaAs PIN diodes allow for higher isolation at zero volt bias and lower insertion loss vs. comparable SPST switches. This switch is designed for use in applications requiring improved RF performance, simple D.C. Bias, and small device size.

SOT-23 Package Outline (Topview)

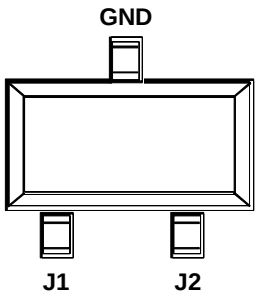

Absolute Maximum Ratings[1]

Parameter	Value
Operating Temperature	-65 °C to +125 °C
Storage Temperature	-65 °C to +150 °C
Dissipated RF & DC Power	50 mW
Incident RF Power	+20 dBm C.W.
Mounting Temperature	+235 °C for 10 seconds

1. Exceeding any of these values may result in permanent damage

Electrical Specifications @ T_A = 25 °C

Parameter and Test Conditions 0.5 GHz to 3.0 GHz Frequency Range	Units	Minimum Value	Typical Value	Maximum Value
Insertion Loss @ +10 mA (+ 3.0 V Reference Voltage) @ 3 GHz	dB	-	0.8	1.3
Isolation @ 0 Volts @ 3 GHz	dB	30	33.0	-
Input / Output Return Loss @ +10 mA (+ 3.0 V Reference Voltage) @ 3 GHz	dB	-	13.0	-
Switching Speed (10 to 90% RF Voltage)[1]	nS	-	10.0	-

NOTES:
1. Pin Labeled J1 is the Diode's Anode
2. Pin Labeled J2 is the Diode's Cathode
3. Pin Labeled GND must be connected to RF & DC Ground

1. Switching speed is measured using a TTL Controlled , +/- 5 V PIN Diode Driver. Driver delay is not included.

Typical RF Performance

MA4AGSW900-287 Insertion Loss vs DC Bias

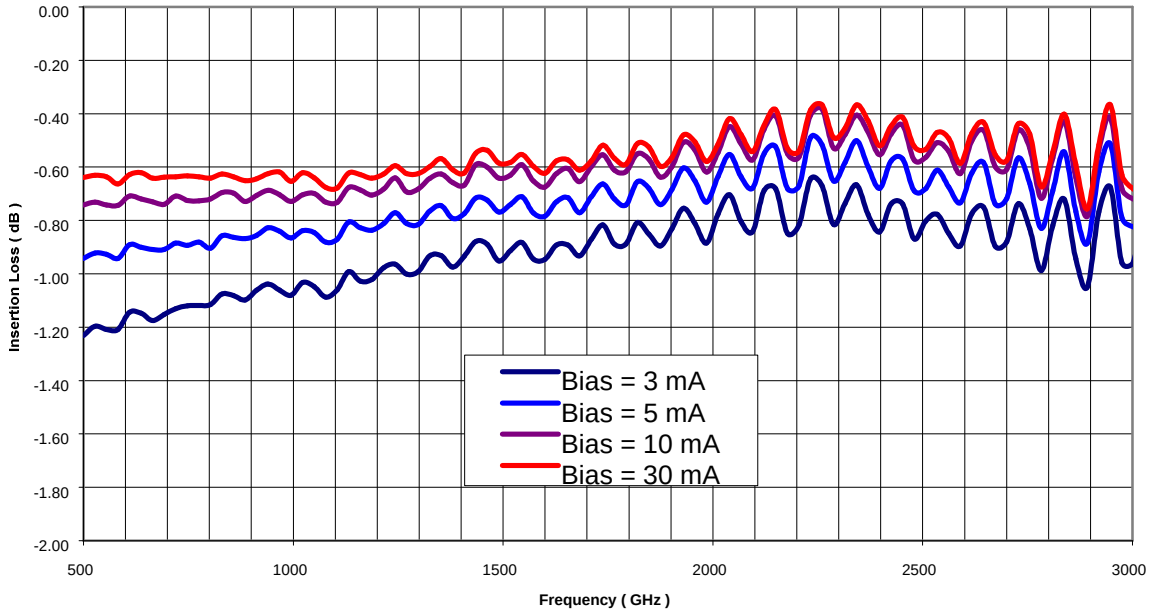

MA4AGSW900-287 Return Loss vs D.C. Bias

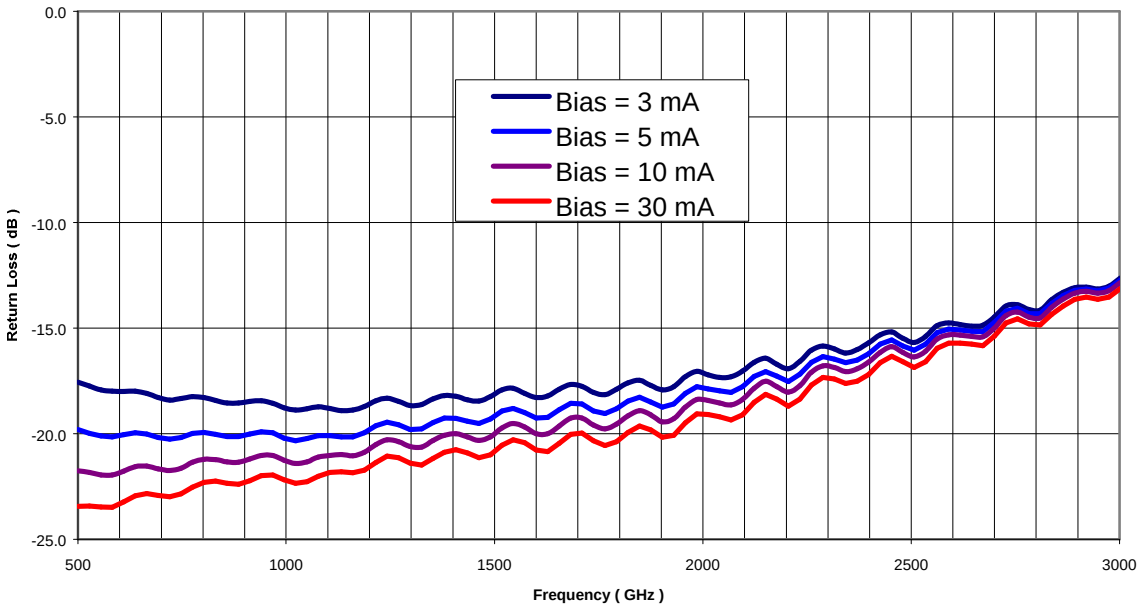

M/A-COM Inc. and its affiliates reserve the right to make changes to the product(s) or information contained herein without notice.

Visit www.macom.com for additional data sheets and product information.

- **North America:** Tel. (800) 366-2266
- **Asia/Pacific:** Tel.+81-44-844-8296, Fax +81-44-844-8298
- **Europe:** Tel. +44 (1908) 574 200, Fax+44 (1908) 574 300

tyco Electronics M/A-COM

Typical RF Performance

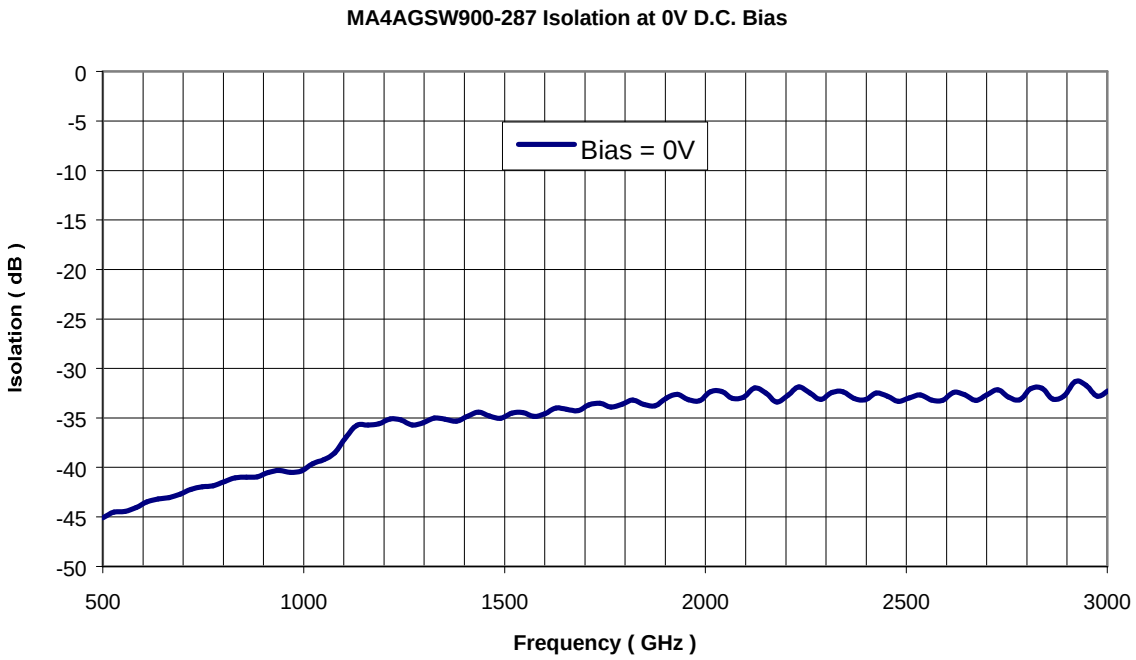

M/A-COM Inc. and its affiliates reserve the right to make changes to the product(s) or information contained herein without notice.

Visit www.macom.com for additional data sheets and product information.

- **North America:** Tel. (800) 366-2266
- **Asia/Pacific:** Tel.+81-44-844-8296, Fax +81-44-844-8298
- **Europe:** Tel. +44 (1908) 574 200, Fax+44 (1908) 574 300

tyco Electronics M/A-COM

Mounting Information

The illustration indicates the recommended mounting pad configuration for the SOT-23package. Solder paste containing flux should be screened onto the pads to a thickness of 0.005- 0.007 inches. The plastic package device is placed in position, firmly adhering to the solder past.

Permanent attachment is performed by a reflow soldering procedure during which the tab temperature does not exceed +275 °C and the body temperature does not exceed +250 °C.

SOT-23 Circuit Layout

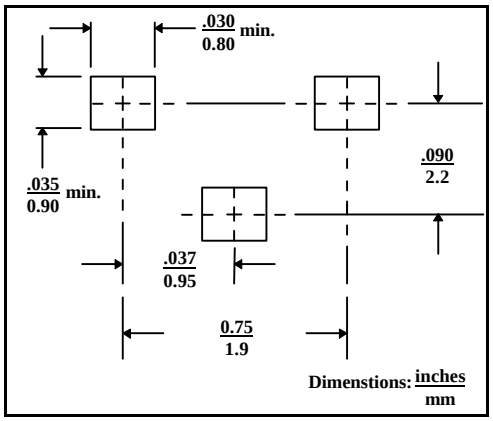

SOT-23
Case Style 287

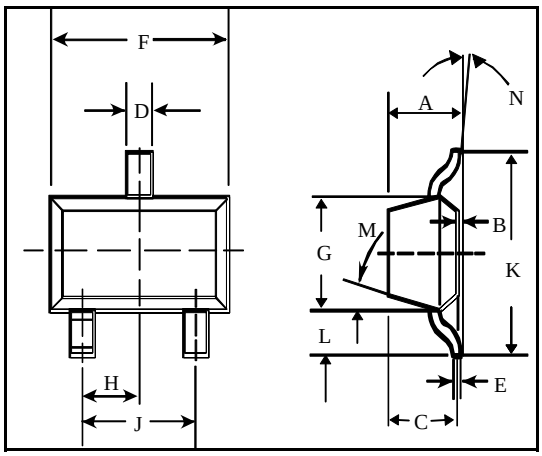

SOT-23 (Case Style 287)

Dim	Inches		Millimeters	
	Min.	Max.	Min.	Max.
A	-	0.048	-	1.22
B	-	0.008	-	0.20
C	-	0.040	-	1.00
D	0.013	0.020	0.35	0.50
E	0.003	0.006	0.08	0.15
F	0.110	0.119	2.80	3.00
G	0.047	0.056	1.20	1.40
H	0.037 typical		0.95 typical	
J	0.075 typical		1.90 typical	
K	-	0.103	-	2.60
L	-	0.024	-	0.60

Dim	Min.
M	10° max.[1]
N	2° … 30°

Note:
1. Applicable on all sides

M/A-COM Inc. and its affiliates reserve the right to make changes to the product(s) or information contained herein without notice.

Visit www.macom.com for additional data sheets and product information.

- **North America:** Tel. (800) 366-2266
- **Asia/Pacific:** Tel.+81-44-844-8296, Fax +81-44-844-8298
- **Europe:** Tel. +44 (1908) 574 200, Fax+44 (1908) 574 300

tyco Electronics M/A-COM

Static Sensitivity

Gallium Arsenide PIN diodes are ESD sensitive and can be damaged by static electricity. Proper ESD techniques should be used when handling these devices.

Operation of the MA4AGSW900-287T SPST Switch

Successful operation of the SPST Switch is accomplished by connecting J1 (PIN 1) to a RF Bias Network , J2 (PIN 2) to a DC Return Network , and SOT-23 Ground (PIN 3) to Circuit RF and D.C. Ground. Approximately + 3.0 V @ + 5 mA will create the Insertion Loss State, and 0 V will produce the Isolation State. The Isolation value is improved slightly by applying –3 V D.C. Bias. The SPST switch can be driven from a simple + 5 V TTL Gate Driver.

SPST Schematic

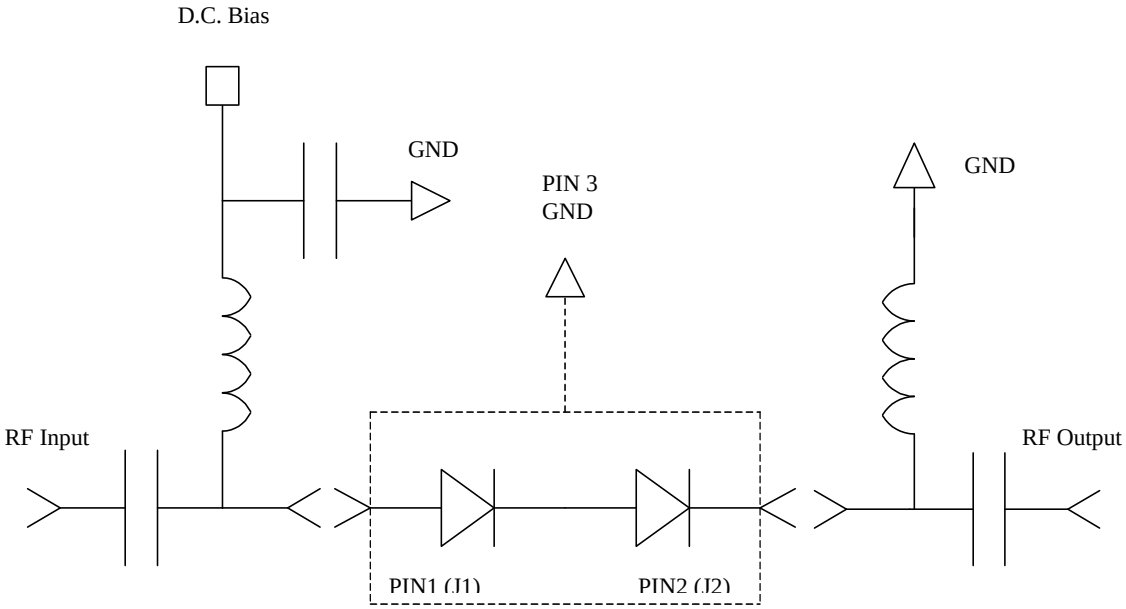

MA4AGSW900-287

M/A-COM Inc. and its affiliates reserve the right to make changes to the product(s) or information contained herein without notice.

Visit www.macom.com for additional data sheets and product information.

- **North America:** Tel. (800) 366-2266
- **Asia/Pacific:** Tel.+81-44-844-8296, Fax +81-44-844-8298
- **Europe:** Tel. +44 (1908) 574 200, Fax+44 (1908) 574 300

tyco Electronics M/A-COM