Tel: +44 1460 256 100
Fax: +44 1460 256 101
www.golledge.com

Golledge Electronics Ltd
Eaglewood Park, ILMINSTER
Somerset, TA19 9DQ, UK

2160.0MHz SAW Filter — Model: **TA0465A**

Part No: **MA09944** — REV NO.: 1

A. MAXIMUM RATING:

1. Input Power Level: 5 dBm
2. DC voltage: 0 V
3. Operating Temperature: -30°C to +80°C
4. Storage Temperature: -40°C to +85°C

B. ELECTRICAL CHARACTERISTICS:

Item	Min.	Typ.	Max.
Center frequency Fc (MHz)	-	2160	-
Insertion loss (2130~2190 MHz) IL (dB)	-	2.2	3.5
Amplitude ripple (2130~2190 MHz) (dB)	-	1.0	2.0
Attenuation (Reference level from 0 dB)			
D.C. ~ 500 MHz (dB)	21	34	-
500 ~ 1900 MHz (dB)	20	29	-
1900 ~ 2050 MHz (dB)	25	33	-
2070 MHz (dB)	40	47	-
2240 ~ 2300 MHz (dB)	20	40	-
2300 ~ 4500 MHz (dB)	22	32	-
Input/Output VSWR (2130~2170 MHz)	-	1.9	2.3
Source impedance Zs (Ω)	-	50	-
Load impedance Z_L (Ω)	-	50	-

Note1. The standard definitions is in JIS C 6703

C. MEASUREMENT CIRCUIT:

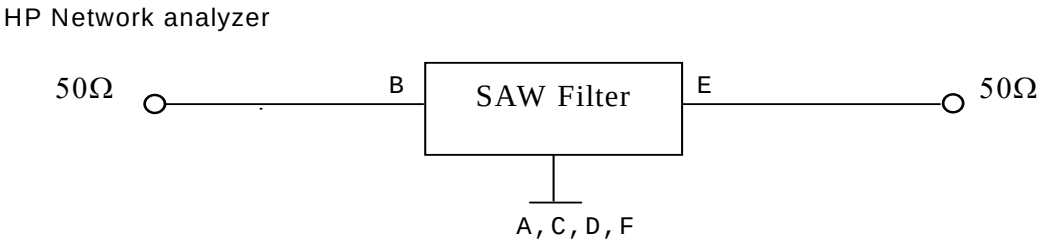

Tel: +44 1460 256 100
Fax: +44 1460 256 101
www.golledge.com

Golledge Electronics Ltd
Eaglewood Park, ILMINSTER
Somerset, TA19 9DQ, UK

2160.0MHz SAW Filter Model: **TA0465A**

Part No: **MA09944** REV NO.: 1

D. OUTLINE DRAWING:

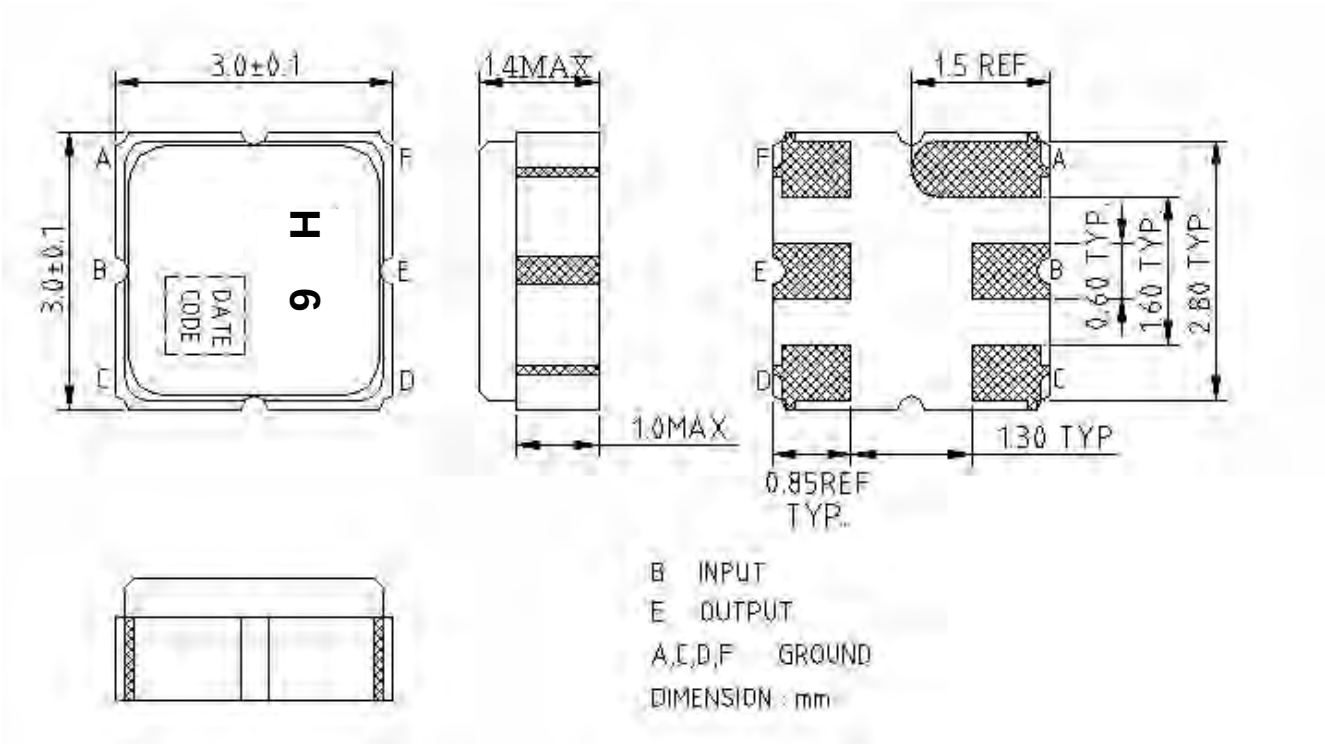

E. PCB FOOTPRINT:

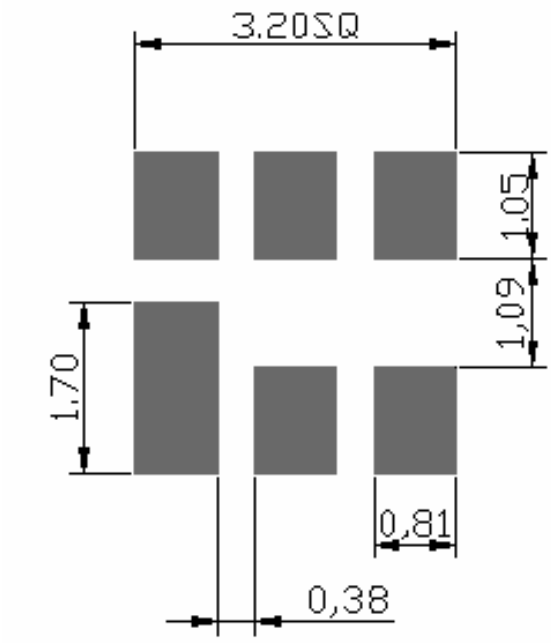

Tel: +44 1460 256 100
Fax: +44 1460 256 101
www.golledge.com

Golledge Electronics Ltd
Eaglewood Park, ILMINSTER
Somerset, TA19 9DQ, UK

F. FREQUENCY CHARACTERISTICS:

Transfer function

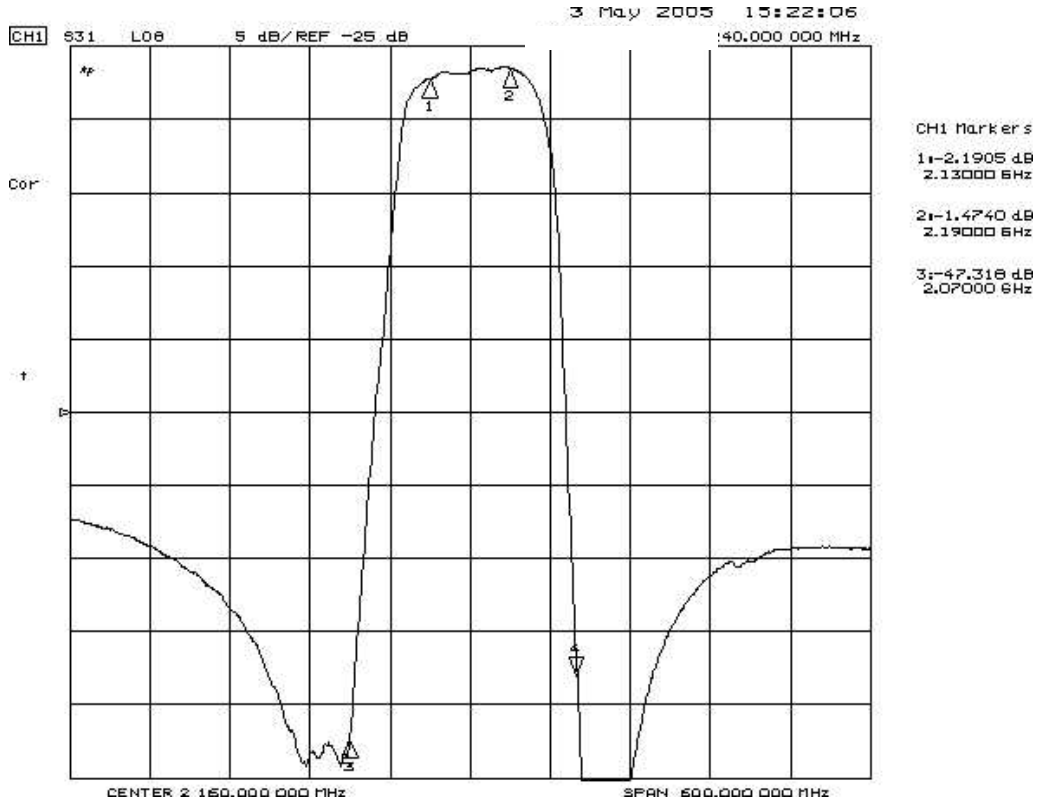

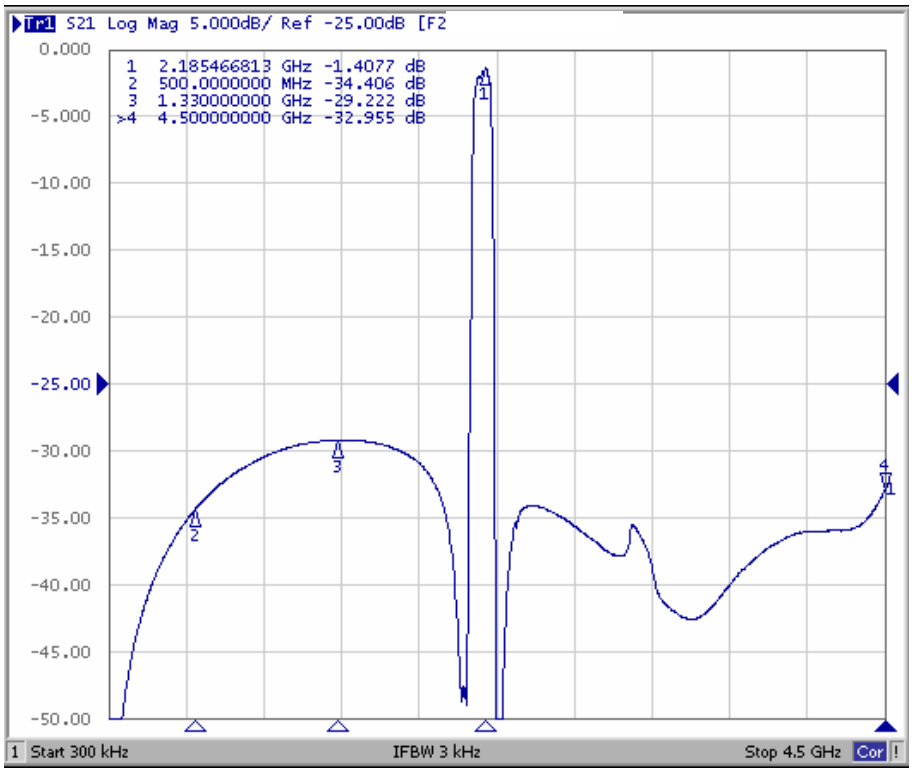

Tel: +44 1460 256 100
Fax: +44 1460 256 101
www.golledge.com

Golledge Electronics Ltd
Eaglewood Park, ILMINSTER
Somerset, TA19 9DQ, UK

2160.0MHz SAW Filter

Model: **TA0465A**

Part No: **MA09944**

REV NO.: 1

Reflections Functions :

S11

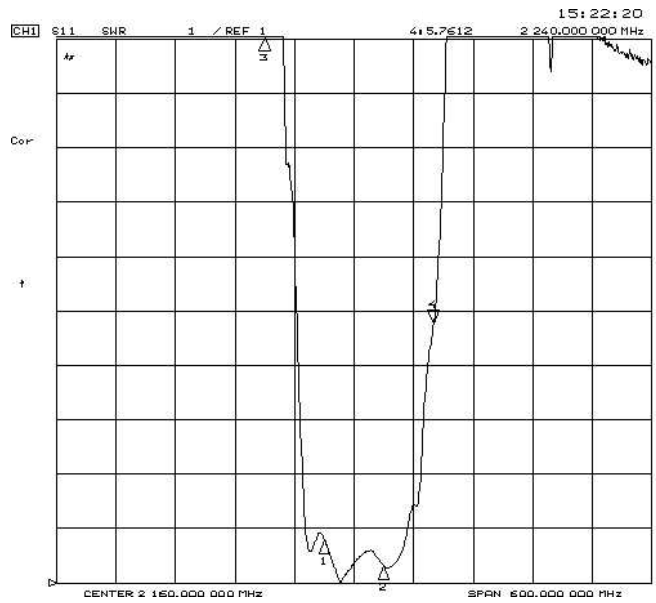

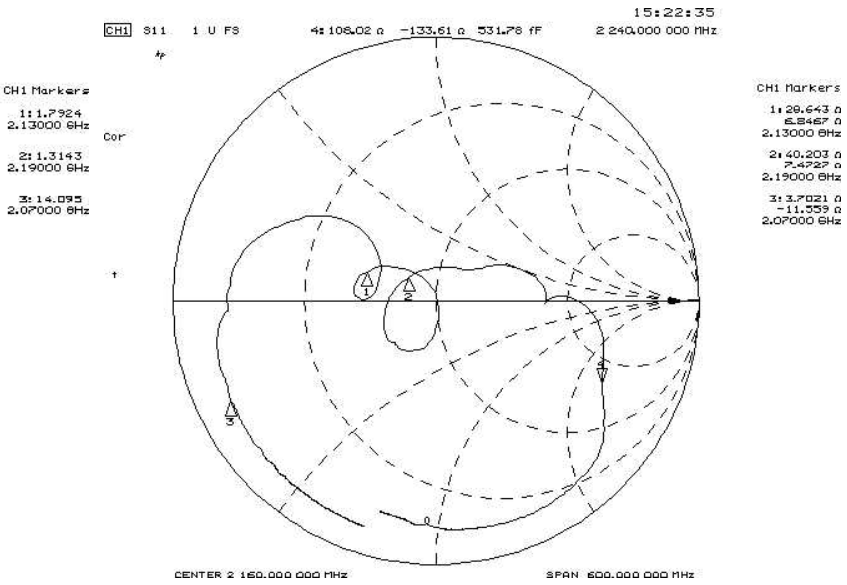

S22

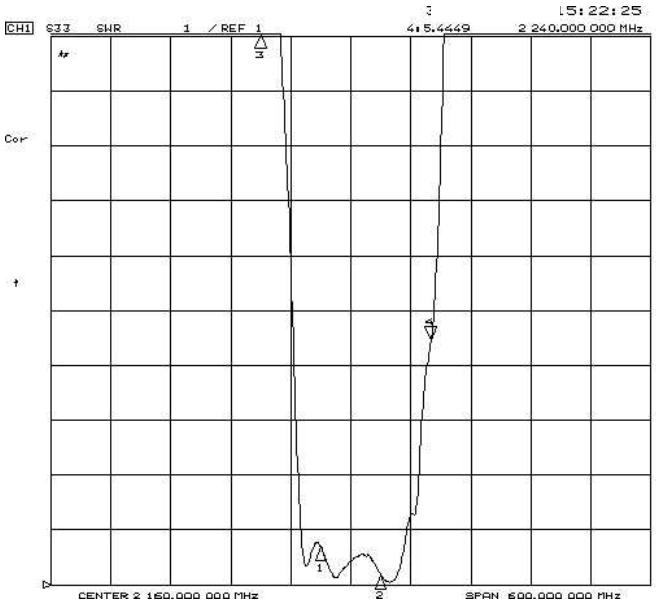

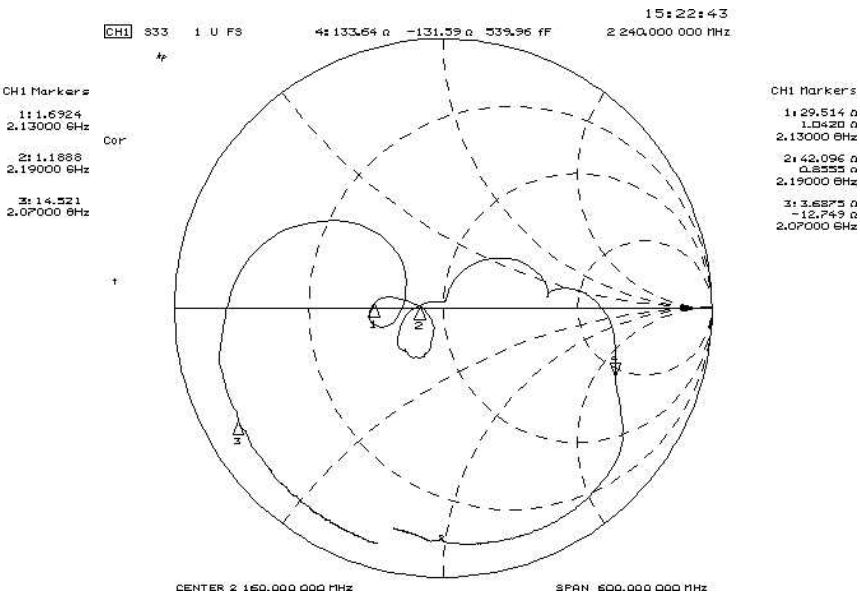

Tel: +44 1460 256 100
Fax: +44 1460 256 101
www.golledge.com

Golledge Electronics Ltd
Eaglewood Park, ILMINSTER
Somerset, TA19 9DQ, UK

G. PACKING:

1. REEL DIMENSION

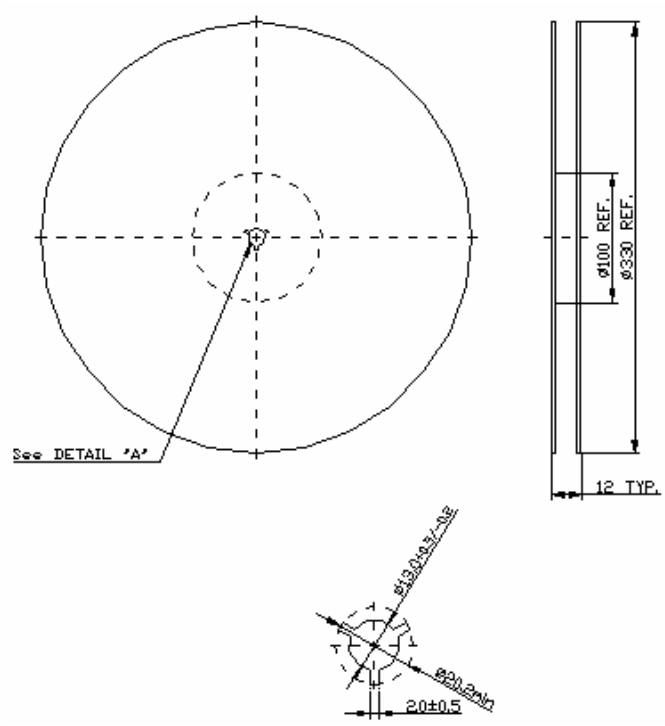

2. TAPE DIMENSION

