Atmel M90E25

Single-Phase High-Performance Wide-Span Energy Metering IC

PRELIMINARY DATASHEET

FEATURES

Metering Features

- Metering features fully in compliance with the requirements of IEC62052-11 and IEC62053-21; applicable in class 1 or class 2 single-phase watt-hour meter.
- Accuracy of 0.1% for active energy over a dynamic range of 5000:1.
- Temperature coefficient is 15 ppm/ ℃ (typical) for on-chip reference voltage
- Single-point calibration over a dynamic range of 5000:1 for active energy.
- Energy Meter Constant doubling at low current to save verification time.
- Electrical parameters measurement: less than ±0.5% fiducial error for Vrms, Irms, mean active/ apparent power, frequency, power factor and phase angle.
- Forward/ reverse active energy with independent energy registers. Active energy can be output by pulse or read through energy registers to adapt to different applications.
- Programmable startup and no-load power threshold.
- Dedicated ADC and different gains for L line and N line current sampling circuits. Current sampled over shunt resistor or current transformer (CT); voltage sampled over resistor divider network or potential transformer (PT).
- Programmable L line and N line metering modes: anti-tampering mode (larger power), L line mode (fixed L line), L+N mode (applicable for single-phase three-wire system) and flexible mode (configure through register).
- Programmable L line and N line power difference threshold in anti-tampering mode.

Other Features

- 3.3V single power supply. Operating voltage range: 2.8~3.6V. Metering accuracy guaranteed within 3.0V~3.6V. 5V compatible for digital input.
- Built-in hysteresis for power-on reset.
- Four-wire SPI interface or simplified three-wire SPI interface with fixed 24 cycles for all registers operation
- Parameter diagnosis function and programmable interrupt output of the IRQ interrupt signal and the WarnOut signal.
- Programmable voltage sag detection and zero-crossing output.
- Channel input range
  - Voltage channel (when gain is '1'): 120μVrms~600mVrms.
  - L line current channel (when gain is '24'): 5μVrms~25mVrms.
  - N line current channel (when gain is '1'): 120μVrms~600mVrms.
- Programmable L line current gain: 1, 4, 8, 16, 24; Programmable N line gain: 1, 2, 4.
- Support L line and N line offset compensation.
- CF1 outputs active energy pulses which can be used for calibration or energy accumulation.
- Crystal oscillator frequency: 8.192 MHz. On-chip 10pF capacitors and no need of external capacitors.
- Green SSOP28 package.
- Operating temperature: -40 ℃ ~ +85 ℃ .

APPLICATION

- The M90E25 is used for active energy metering for single-phase two-wire (1P2W), single-phase three-wire (1P3W) or anti-tampering energy meters. With the measurement function, the M90E25 can also be used in power instruments which need to measure voltage, current, etc.

DESCRIPTION

The M90E25 is high-performance wide-span energy metering chips. The ADC and DSP technology ensure the chips' long-term stability over variations in grid and ambient environmental conditions.

BLOCK DIAGRAM

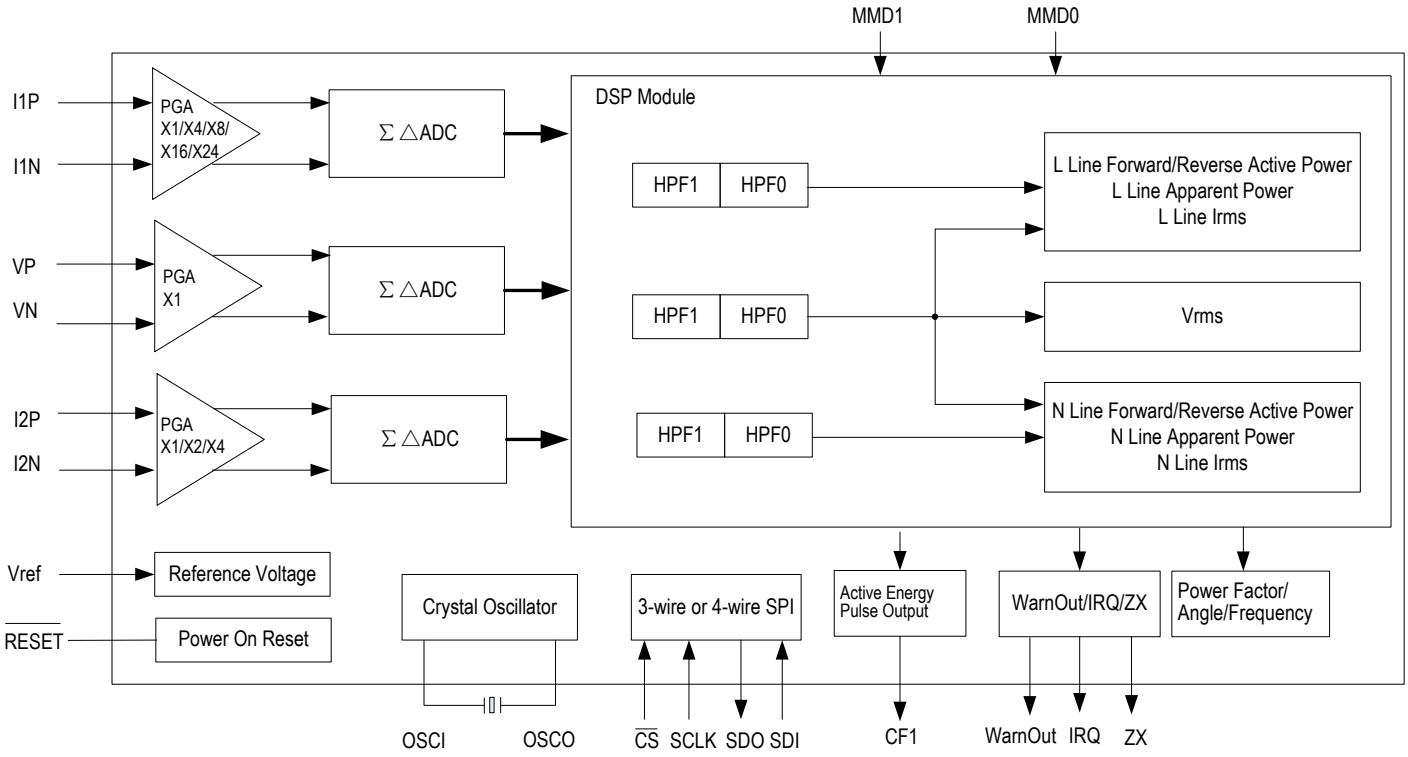

Figure-1 Block Diagram

Table of Contents

FEATURES 1
APPLICATION 2
DESCRIPTION 2
BLOCK DIAGRAM 2
1 PIN ASSIGNMENT 7
2 PIN DESCRIPTION 8
3 FUNCTIONAL DESCRIPTION 10
3.1 DYNAMIC METERING RANGE 10
3.2 STARTUP AND NO-LOAD POWER 10
3.3 ENERGY REGISTERS 10
3.4 N LINE METERING AND ANTI-TAMPERING 11
3.4.1 Metering Mode and L/N Line Current Sampling Gain Configuration 11
3.4.2 Anti-Tampering Mode 11
3.5 MEASUREMENT AND ZERO-CROSSING 12
3.5.1 Measurement 12
3.5.2 Zero-Crossing 12
3.6 CALIBRATION 13
3.7 RESET 14
4 INTERFACE 15
4.1 SERIAL PERIPHERAL INTERFACE (SPI) 15
4.1.1 Four-Wire Mode 15
4.1.2 Three-Wire Mode 16
4.1.3 Timeout and Protection 17
4.2 WARNOUT PIN FOR FATAL ERROR WARNING 18
4.3 LOW COST IMPLEMENTATION IN ISOLATION WITH MCU 18
5 REGISTER 19
5.1 REGISTER LIST 19
5.2 STATUS AND SPECIAL REGISTER 21
5.3 METERING/ MEASUREMENT CALIBRATION AND CONFIGURATION 25
5.3.1 Metering Calibration and Configuration Register 25
5.3.2 Measurement Calibration Register 32
5.4 ENERGY REGISTER 37
5.5 MEASUREMENT REGISTER 40
6 ELECTRICAL SPECIFICATION 46
6.1 ELECTRICAL SPECIFICATION 46
6.2 SPI INTERFACE TIMING 48
6.3 POWER ON RESET TIMING 50
6.4 ZERO-CROSSING TIMING 51

6.5 VOLTAGE SAG TIMING 52
6.6 PULSE OUTPUT 53
6.7 ABSOLUTE MAXIMUM RATING 53
ORDERING INFORMATION 54
PACKAGE DIMENSIONS 55
REVISION HISTORY 56

List of Tables

Table-1 Pin Description 8
Table-2 Active Energy Metering Error 10
Table-3 Threshold Configuration for Startup and No-Load Power 10
Table-4 Energy Registers 10
Table-5 Metering Mode 11
Table-6 The Measurement Format 12
Table-7 Read / Write Result in Four-Wire Mode 17
Table-8 Read / Write Result in Three-Wire Mode 17
Table-9 Register List 19
Table-10 SPI Timing Specification 49
Table-11 Power On Reset Specification 50
Table-12 Zero-Crossing Specification 51
Table-13 Voltage Sag Specification 52

List of Figures

Figure-1 Block Diagram 2
Figure-2 Pin Assignment (Top View) 7
Figure-3 Read Sequence in Four-Wire Mode 15
Figure-4 Write Sequence in Four-Wire Mode 15
Figure-5 Read Sequence in Three-Wire Mode 16
Figure-6 Write Sequence in Three-Wire Mode 16
Figure-7 4-Wire SPI Timing Diagram 48
Figure-8 3-Wire SPI Timing Diagram 48
Figure-9 Power On Reset Timing Diagram 50
Figure-10 Zero-Crossing Timing Diagram 51
Figure-11 Voltage Sag Timing Diagram 52
Figure-12 Output Pulse Width 53

1 PIN ASSIGNMENT

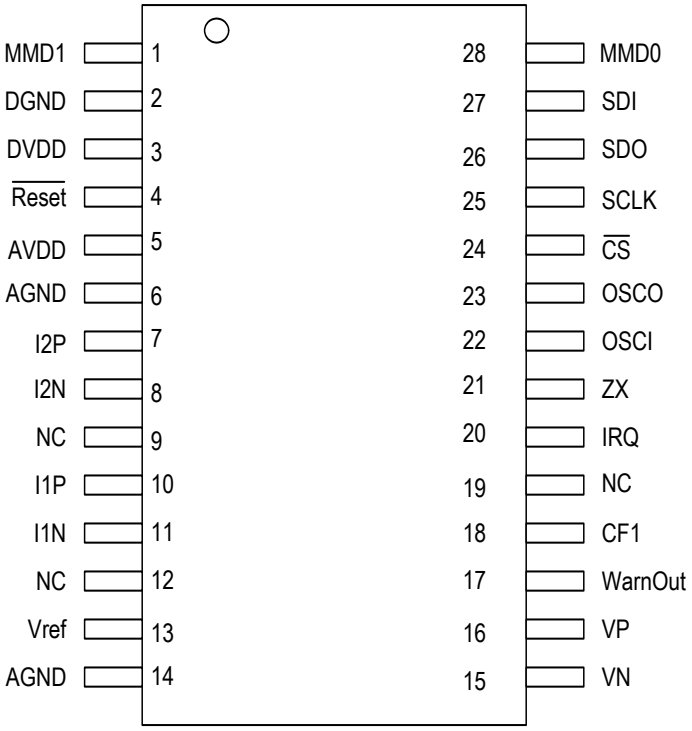

Figure-2 Pin Assignment (Top View)

2 PIN DESCRIPTION

Table-1 Pin Description

Name	Pin No.	I/O [note 1]	Type	Description
$\overline{\text{Reset}}$	4	I	LVTTL	**$\overline{\text{Reset}}$: Reset Pin (active low)** This pin should connect to ground through a 0.1μF filter capacitor. In application it can also directly connect to one output pin from microcontroller (MCU).
DVDD	3	I	Power	**DVDD: Digital Power Supply** This pin provides power supply to the digital part. It should be decoupled with a 10μF electrolytic capacitor and a 0.1μF capacitor.
DGND	2	I	Power	**DGND: Digital Ground**
AVDD	5	I	Power	**AVDD: Analog Power Supply** This pin provides power supply to the analog part. This pin should connect to DVDD through a 10Ω resistor and be decoupled with a 0.1μF capacitor.
Vref	13	O	Analog	**Vref: Output Pin for Reference Voltage** This pin should be decoupled with a 1μF capacitor and a 1nF capacitor.
AGND	6, 14	I	Power	**AGND: Analog Ground**
I1P I1N	10 11	I	Analog	**I1P: Positive Input for L Line Current** **I1N: Negative Input for L Line Current** These pins are differential inputs for L line current. Input range is 5μVrms~25mVrms when gain is '24'.
I2P I2N	7 8	I	Analog	**I2P: Positive Input for N Line Current** **I2N: Negative Input for N Line Current** These pins are differential inputs for N line current. Input range is 120μVrms~600mVrms when gain is '1'.
VP VN	16 15	I	Analog	**VP: Positive Input for Voltage** **VN: Negative Input for Voltage** These pins are differential inputs for voltage. Input range is 120μVrms~600mVrms.
NC	9, 12, 19			**NC: These pins could be left open or connect to ground.**
$\overline{\text{CS}}$	24	I	LVTTL	**$\overline{\text{CS}}$: Chip Select (Active Low)** In 4-wire SPI mode, this pin must be driven from high to low for each read/write operation, and maintain low for the entire operation. In 3-wire SPI mode, this pin must be low all the time. Refer to section 4.1.
SCLK	25	I	LVTTL	**SCLK: Serial Clock** This pin is used as the clock for the SPI interface. Data on SDI is shifted into the chip on the rising edge of SCLK while data on SDO is shifted out of the chip on the falling edge of SCLK.
SDO	26	OZ	LVTTL	**SDO: Serial Data Output** This pin is used as the data output for the SPI interface. Data on this pin is shifted out of the chip on the falling edge of SCLK.
SDI	27	I	LVTTL	**SDI: Serial Data Input** This pin is used as the data input for the SPI interface. Address and data on this pin is shifted into the chip on the rising edge of SCLK.
MMD1 MMD0	1 28	I	LVTTL	**MMD1/0: Metering Mode Configuration** 00: anti-tampering mode (larger power); 01: L line mode (fixed L line); 10: L+N mode (applicable for single-phase three-wire system); 11: flexible mode (line specified by the LNSel bit (MMode, 2BH))
OSCI	22	I	LVTTL	**OSCI: External Crystal Input** An 8.192 MHz crystal is connected between OSCI and OSCO. There is an on-chip 10pF capacitor, therefore no need of external capacitors.

Table-1 Pin Description (Continued)

Name	Pin No.	I/O [note 1]	Type	Description
OSCO	23	O	LVTTL	**OSCO: External Crystal Output** An 8.192 MHz crystal is connected between OSCI and OSCO. There is an on-chip 10pF capacitor, therefore no need of external capacitors.
CF1	18	O	LVTTL	**CF1: Active Energy Pulse Output** This pin outputs active energy pulses.
ZX	21	O	LVTTL	**ZX: Voltage Zero-Crossing Output** This pin is asserted when voltage crosses zero. Zero-crossing mode can be configured to positive zero-crossing, negative zero-crossing or all zero-crossing by the Zxcon[1:0] bits (MMode, 2BH).
IRQ	20	O	LVTTL	**IRQ: Interrupt Output** This pin is asserted when one or more events in the SysStatus register (01H) occur. It is deasserted when there is no bit set in the SysStatus register (01H).
WarnOut	17	O	LVTTL	**WarnOut: Fatal Error Warning** This pin is asserted when there is metering parameter calibration error or voltage sag. Refer to section 4.2.
Note 1: All digital inputs are 5V tolerant except for the OSCI pin.				

3 FUNCTIONAL DESCRIPTION

3.1 DYNAMIC METERING RANGE

Accuracy is 0.1% for active energy metering over a dynamic range of 5000:1 (typical). Refer to Table-2.

Table-2 Active Energy Metering Error

Current	Power Factor	Error(%)
20mA ≤ I < 50mA	1.0	±0.2
50mA ≤ I ≤ 100A		±0.1
50mA ≤ I < 100mA	0.5 (Inductive) 0.8 (Capacitive)	±0.2
100mA ≤ I ≤ 100A		±0.1
Note: Shunt resistor is 250 μΩ or CT ratio is 1000:1 and load resistor is 6Ω.		

3.2 STARTUP AND NO-LOAD POWER

Startup and no-load power thresholds are programmable. The related registers are listed in Table-3.

Table-3 Threshold Configuration for Startup and No-Load Power

Threshold	Register
Threshold for Active Startup Power	PStartTh, 27H
Threshold for Active No-load Power	PNolTh, 28H

The chip will start within 1.2 times of the theoretical startup time of the configured startup power, if startup power is less than the corresponding power of 20mA when power factor or sinϕ is 1.0.

The chip has no-load status bits, the Pnoload bit (EnStatus, 46H). The chip will not output any active pulse (CF1) in active no-load state.

3.3 ENERGY REGISTERS

The M90E25 provides energy pulse output CF1 which is proportionate to active energy. Energy is usually accumulated by adding the CF1 pulses in system applications. Alternatively, the M90E25 provides energy registers. There are forward (inductive), reverse (capacitive) and absolute energy registers. Refer to Table-4.

Table-4 Energy Registers

Energy	Register
Forward Active Energy	APenergy, 40H
Reverse Active Energy	ANenergy, 41H
Absolute Active Energy	ATenergy, 42H

Each energy register is cleared after read. The resolution of energy registers is 0.1CF, i.e. one LSB represents 0.1 energy pulse.

3.4 N LINE METERING AND ANTI-TAMPERING

3.4.1 METERING MODE AND L/N LINE CURRENT SAMPLING GAIN CONFIGURATION

The M90E25 has two current sampling circuits with N line metering and anti-tampering functions. The MMD1 and MMD0 pins are used to configure the metering mode. Refer to Table-5.

Table-5 Metering Mode

MMD1	MMD0	Metering Mode	CF1 Output
0	0	Anti-tampering Mode (larger power)	CF1 represents the larger energy line. Refer to section 3.4.2.
0	1	L Line Mode (fixed L line)	CF1 represents L line energy all the time.
1	0	L+N Mode (applicable for single-phase three-wire system)	CF1 represents the arithmetic sum of L line and N line energy
1	1	Flexible Mode (line specified by the LNSel bit (MMode, 2BH))	CF1 represents energy of the specified line.

The M90E25 has two current sampling circuits with different gain configurations. L line gain can be 1, 4, 8, 16 and 24, and N line gain can be 1, 2 and 4. The configuration is made by the MMode register (2BH). Generally L line can be sampled over shunt resistor or CT. N line can be sampled over CT for isolation consideration. Note that Rogowski coil is not supported.

3.4.2 ANTI-TAMPERING MODE

Threshold

In anti-tampering mode, the power difference threshold between L line and N line can be: 1%, 2%,... 12%, 12.5%, 6.25%, 3.125% and 1.5625%, altogether 16 choices. The configuration is made by the Pthresh[3:0] bits (MMode, 2BH) and the default value is 3.125%.

Compare Method

In anti-tampering mode, the compare method is as follows:

If current metering line is L line and

$$\frac{\text{N Line Active Power} - \text{L Line Active Power}}{\text{L Line Active Power}} * 100\% > \text{Threshold}$$

N line is switched as the metering line, otherwise L line keeps as the metering line.

If current metering line is N line and

$$\frac{\text{L Line Active Power} - \text{N Line Active Power}}{\text{N Line Active Power}} * 100\% > \text{Threshold}$$

L line is switched as the metering line, otherwise N line keeps as the metering line.

This method can achieve hysteresis around the threshold automatically. L line is employed after reset by default.

Special Treatment at Low Power

When power is low, general factors such as the quantization error or calibration difference between L line and N line might cause the power difference to be exceeded. To ensure L line and N line to start up normally, special treatment as follows is adopted:

The line with higher power is selected as the metering line when both L line and N line power are lower than 8 times of the startup power but higher than the startup power.

3.5 MEASUREMENT AND ZERO-CROSSING

3.5.1 MEASUREMENT

The M90E25 has the following measurements:

- voltage rms
- current rms (L line/N line)
- mean active power (L line/N line)
- voltage frequency
- power factor (L line/N line)
- phase angle between voltage and current (L line/N line)
- mean apparent power (L line/N line)

The above measurements are all calculated with fiducial error except for frequency. The frequency accuracy is 0.01Hz, and the other measurement accuracy is 0.5%. Fiducial error is calculated as follow:

$$\text{Fiducial_Error} = \frac{U_{mea} - U_{real}}{U_{FV}} * 100\%$$

Where U_{mea} is the measured voltage, U_{real} is the actual voltage and U_{FV} is the fiducial value.

Table-6 The Measurement Format

Measurement	Fiducial Value (FV)	M90E25 Defined Format	Range	Comment
Voltage rms	Un	XXX.XX	0~655.35V	
Current rms[note 1, note 2]	Imax as 4Ib	XX.XXX	0~65.535A	
Active Power[note 1]	maximum power as Un*4Ib	XX.XXX	-32.768~+32.767 kW	Complement, MSB as the sign bit
Apparent Power[note 1]	Un*4Ib	XX.XXX	0~+32.767 kVA	Complement, MSB always '0'
Frequency	fn	XX.XX	45.00~65.00 Hz	
Power Factor[note 3]	1.000	X.XXX	-1.000~+1.000	Signed, MSB as the sign bit
Phase Angle[note 4]	180°	XXX.X	-180°~+180°	Signed, MSB as the sign bit

Note 1: All registers are of 16 bits. For cases when the current and active/apparent power goes beyond the above range, it is suggested to be handled by microcontroller (MCU) in application. For example, register value can be calibrated to 1/2 of the actual value during calibration, then multiply 2 in application. Note that if the actual current is twice of that of the M90E25, the actual active/apparent power is also twice of that of the chip.
Note 2: The accuracy is not guaranteed when the current is lower than 15mA. Note that the tolerance is 25 mA at I_{FV} of 5A and fiducial accuracy of 0.5%.
Note 3: Power factor is obtained by active power dividing apparent power
Note 4: Phase angle is obtained when voltage/current crosses zero at the frequency of 256kHz. Precision is not guaranteed at small current.

3.5.2 ZERO-CROSSING

The ZX pin is asserted when the sampling voltage crosses zero. Zero-crossing mode can be configured to positive zero-crossing, negative zero-crossing and all zero-crossing by the Zxcon[1:0] bits (MMode, 2BH). Refer to section 6.4.

The zero-crossing signal can facilitate operations such as relay operation and power line carrier transmission in typical smart meter applications.

3.6 CALIBRATION

Calibration includes metering and measurement calibration.

Metering Calibration

The M90E25 design methodology guarantees the accuracy over the entire dynamic range, after metering calibration at one specific current, i.e. the basic current of I_b.

The calibration procedure includes the following steps:

1. Calibrate gain at unity power factor;
2. Calibrate phase angle compensation at 0.5 inductive power factor.

Generally, line current sampling is susceptible to the circuits around the sensor when shunt resistor is employed as the current sensor in L line. For example, the transformer in the energy meter's power supply may conduct interference to the shunt resistor. Such interference will cause perceptible metering error, especially at low current conditions. The total interfere is at a statistically constant level. In this case, the M90E25 provides the power offset compensation feature to improve metering performance.

L line and N line need to be calibrated sequentially.

Measurement Calibration

Measurement calibration includes gain calibration for voltage rms and current rms.

Considering the possible nonlinearity around zero caused by external components, the M90E25 also provides offset compensation for voltage rms, current rms and mean active power.

The M90E25 design methodology guarantees automatic calibration for frequency, phase angle and power factor measurement.

3.7 RESET

The M90E25 has an on-chip power supply monitor circuit with built-in hysteresis. The M90E25 only works within the voltage range.

The M90E25 has three means of reset: power-on reset, hardware reset and software reset. All registers resume to their default value after reset.

Power-on Reset: Power-on reset is initiated during power-up. Refer to section 6.3.

Hardware Reset: Hardware Reset is initiated when the $\overline{\text{reset}}$ pin is pulled low. The width of the reset signal should be over 200μs.

Software Reset: Software Reset is initiated when '789AH' is written to the software reset register (SoftReset, 00H).

4 INTERFACE

4.1 SERIAL PERIPHERAL INTERFACE (SPI)

SPI is a full-duplex, synchronous channel. There are two SPI modes: four-wire mode and three-wire mode. In four-wire mode, four pins are used: $\overline{CS}$, SCLK, SDI and SDO. In three-wire mode, three pins are used: SCLK, SDI and SDO. Data on SDI is shifted into the chip on the rising edge of SCLK while data on SDO is shifted out of the chip on the falling edge of SCLK. The LastSPIData register (06H) stores the 16-bit data that is just read or written.

4.1.1 FOUR-WIRE MODE

In four-wire mode, the $\overline{CS}$ pin must be driven low for the entire read or write operation. The first bit on SDI defines the access type and the lower 7-bit is decoded as address.

Read Sequence

As shown in Figure-3, a read operation is initiated by a high on SDI followed by a 7-bit register address. A 16-bit data in this register is then shifted out of the chip on SDO. A complete read operation contains 24 cycles.

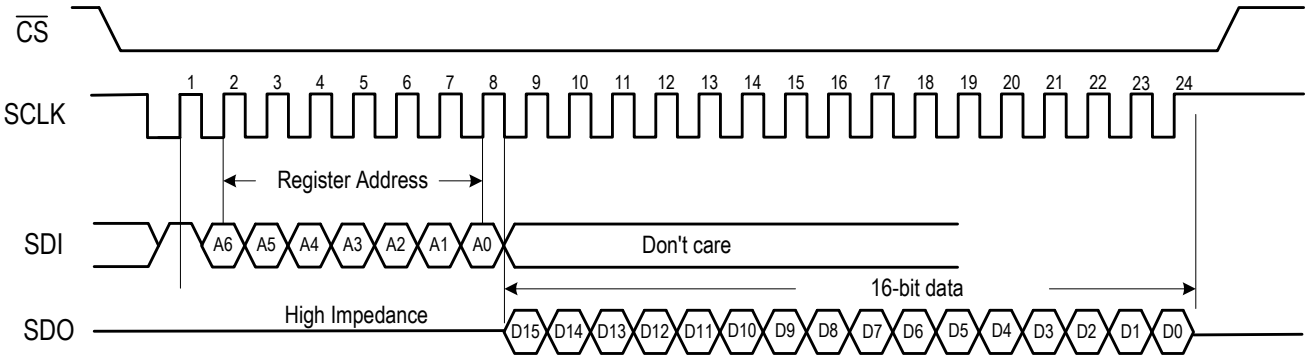

Figure-3 Read Sequence in Four-Wire Mode

Write Sequence

As shown in Figure-4, a write operation is initiated by a low on SDI followed by a 7-bit register address. A 16-bit data is then shifted into the chip on SDI. A complete write operation contains 24 cycles.

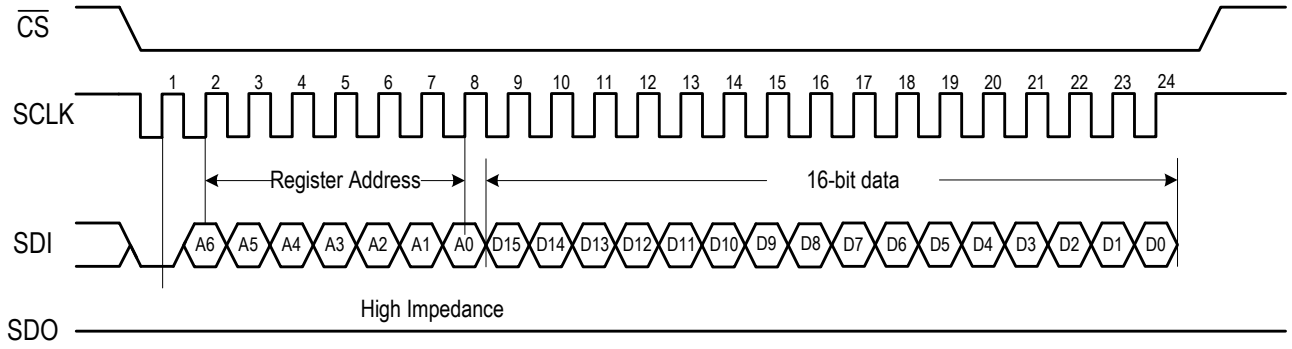

Figure-4 Write Sequence in Four-Wire Mode

4.1.2 THREE-WIRE MODE

In three-wire mode, $\overline{CS}$ is always at low level. When there is no operation, SCLK keeps at high level. The start of a read or write operation is triggered if SCLK is consistently low for at least 400μs. The subsequent read or write operation is similar to that in four-wire mode. Refer to Figure-5 and Figure-6.

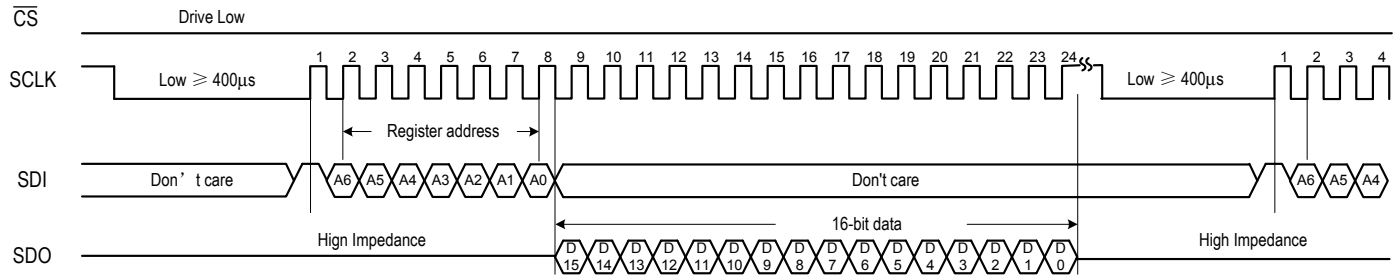

Figure-5 Read Sequence in Three-Wire Mode

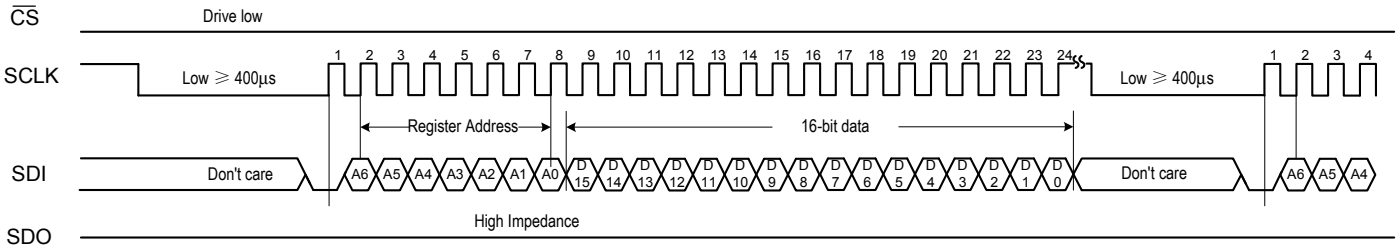

Figure-6 Write Sequence in Three-Wire Mode

4.1.3 TIMEOUT AND PROTECTION

Timeout occurs if SCLK does not toggle for 6ms in both four-wire and three-wire modes. When timeout, the read or write operation is aborted.

If there are more than 24 SCLK cycles when $\overline{CS}$ is driven low in four-wire mode or between two starts in three-wire mode, writing operation is prohibited while normal reading operation can be completed by taking the first 24 SCLK cycles as the valid ones. However, the reading result might not be the intended one.

A read access to an invalid address returns all zero. A write access to an invalid address is discarded.

Table-7 and Table-8 list the read or write result in different conditions.

Table-7 Read / Write Result in Four-Wire Mode

Condition			Result	
Operation	Timeout	SCLK Cycles[note 1]	Read/Write Status	LastSPIData Register Update
Read	-[note 2]	>=24	Normal Read	Yes
	-[note 2]	<24	Partial Read	No
Write	No	=24	Normal Write	Yes
	No	!=24	No Write	No
	Yes	-	No Write	No

Note 1: The number of SCLK cycles when $\overline{CS}$ is driven low or the number of SCLK cycles before timeout if any.
Note 2: '-' stands for Don't Care.

Table-8 Read / Write Result in Three-Wire Mode

Condition			Result	
Operation	Timeout	SCLK Cycles[note 1]	Read/Write Status	LastSPIData Register Update
Read	No	>=24[note 2]	Normal Read	Yes
	Timeout after 24 cycles	>24	Normal Read	Yes
	Timeout before 24 cycles	-[note 3]	Partial Read	No
	Timeout at 24 cycles	=24	Normal Read	Yes
Write	No	=24	Normal Write	Yes
	No	!=24	No Write	No
	Yes	-	No Write	No

Note 1: The number of SCLK cycles between 2 starts or the number of SCLK cycles before timeout if any.
Note 2: There is no such case of less than 24 SCLK cycles when there is no timeout in three-wire mode, because the first few SCLK cycles in the next operation is counted into this operation. In this case, data is corrupted.
Note 3: '-' stands for Don't Care.

4.2 WARNOUT PIN FOR FATAL ERROR WARNING

Fatal error warning is raised through the WarnOut pin in two cases: checksum calibration error and voltage sag.

Calibration Error

The M90E25 performs diagnosis on a regular basis for important parameters such as calibration parameters and metering configuration. When checksum is not correct, the CalErr[1:0] bits (SysStatus, 01H) are set, and both the WarnOut pin and the IRQ pin are asserted. When checksum is not correct, the metering part does not work to prevent a large number of pulses during power-on or any abnormal situation upon incorrect parameters.

Voltage Sag

Voltage sag is detected when voltage is continuously below the voltage sag threshold for one cycle which starts from any zero-crossing point. Voltage threshold is configured by the SagTh register (03H). Refer to section 6.5.

When voltage sag occurs, the SagWarn bit (SysStatus, 01H) is set and the WarnOut pin is asserted if the FuncEn register (02H) enables voltage sag warning through the WarnOut pin. This function helps reduce power-down detection circuit in system design. In addition, the method of judging voltage sag by detecting AC side voltage eliminates the influence of large capacitor in traditional rectifier circuit, and can detect voltage sag earlier.

4.3 LOW COST IMPLEMENTATION IN ISOLATION WITH MCU

The following functions can be achieved at low cost when the M90E25 is isolated from the MCU:

SPI: MCU can perform read and write operations through low speed optocoupler (e.g. PS2501) when the M90E25 is isolated from the MCU. The SPI interface can be of 3-wire or 4-wire.

Energy Pulses CF1: Energy can be accumulated by reading values in corresponding energy registers. CF1 can also connect to the optocoupler and the energy pulse light can be turned on by CF1.

Fatal Error WarnOut: Fatal error can be acquired by reading the CalErr[1:0] bits (SysStatus, 01H).

IRQ: IRQ interrupt can be acquired by reading the SysStatus register (01H).

Reset: The M90E25 is reset when ‘789AH’ is written to the software reset register (SoftReset, 00H).

5 REGISTER

5.1 REGISTER LIST

Table-9 Register List

Register Address	Register Name	Read/Write Type	Functional Description	Page
Status and Special Register				
00H	SoftReset	W	Software Reset	P 21
01H	SysStatus	R/C	System Status	P 22
02H	FuncEn	R/W	Function Enable	P 23
03H	SagTh	R/W	Voltage Sag Threshold	P 23
04H	SmallPMod	R/W	Small-Power Mode	P 24
06H	LastSPIData	R	Last Read/Write SPI Value	P 24
Metering Calibration and Configuration Register				
20H	CalStart	R/W	Calibration Start Command	P 25
21H	PLconstH	R/W	High Word of PL_Constant	P 25
22H	PLconstL	R/W	Low Word of PL_Constant	P 26
23H	Lgain	R/W	L Line Calibration Gain	P 26
24H	Lphi	R/W	L Line Calibration Angle	P 26
25H	Ngain	R/W	N Line Calibration Gain	P 27
26H	Nphi	R/W	N Line Calibration Angle	P 27
27H	PStartTh	R/W	Active Startup Power Threshold	P 27
28H	PNolTh	R/W	Active No-Load Power Threshold	P 28
2BH	MMode	R/W	Metering Mode Configuration	P 29
2CH	CS1	R/W	Checksum 1	P 31
Measurement Calibration Register				
30H	AdjStart	R/W	Measurement Calibration Start Command	P 32
31H	Ugain	R/W	Voltage rms Gain	P 32
32H	IgainL	R/W	L Line Current rms Gain	P 33
33H	IgainN	R/W	N Line Current rms Gain	P 33
34H	Uoffset	R/W	Voltage Offset	P 33
35H	IoffsetL	R/W	L Line Current Offset	P 34
36H	IoffsetN	R/W	N Line Current Offset	P 34
37H	PoffsetL	R/W	L Line Active Power Offset	P 34
39H	PoffsetN	R/W	N Line Active Power Offset	P 35
3BH	CS2	R/W	Checksum 2	P 36
Energy Register				
40H	APenergy	R/C	Forward Active Energy	P 37
41H	ANenergy	R/C	Reverse Active Energy	P 38
42H	ATenergy	R/C	Absolute Active Energy	P 38
46H	EnStatus	R	Metering Status	P 39
Measurement Register				
48H	Irms	R	L Line Current rms	P 40
49H	Urms	R	Voltage rms	P 40
4AH	Pmean	R	L Line Mean Active Power	P 41
4CH	Freq	R	Voltage Frequency	P 41

Table-9 Register List (Continued)

Register Address	Register Name	Read/Write Type	Functional Description	Page
4DH	PowerF	R	L Line Power Factor	P 42
4EH	Pangle	R	Phase Angle between Voltage and L Line Current	P 42
4FH	Smean	R	L Line Mean Apparent Power	P 43
68H	Irms2	R	N Line Current rms	P 43
6AH	Pmean2	R	N Line Mean Active Power	P 44
6DH	PowerF2	R	N Line Power Factor	P 44
6EH	Pangle2	R	Phase Angle between Voltage and N Line Current	P 45
6FH	Smean2	R	N Line Mean Apparent Power	P 45

5.2 STATUS AND SPECIAL REGISTER

SoftReset
Software Reset

Address: 00H
Type: Write
Default Value: 0000H

15	14	13	12	11	10	9	8
SoftReset15	SoftReset14	SoftReset13	SoftReset12	SoftReset11	SoftReset10	SoftReset9	SoftReset8
7	6	5	4	3	2	1	0
SoftReset7	SoftReset6	SoftReset5	SoftReset4	SoftReset3	SoftReset2	SoftReset1	SoftReset0

Bit	Name	Description
15 - 0	SoftReset[15:0]	Software reset register. The XXXXXX resets if only 789AH is written to this register.

SysStatus
System Status

Address: 01H
Type: Read/Clear
Default Value: 0000H

15	14	13	12	11	10	9	8
CalErr1	CalErr0	AdjErr1	AdjErr0	-	-	-	-
7	6	5	4	3	2	1	0
LNchange	-	RevPchg	-	-	-	SagWarn	-

Bit	Name	Description
15 - 14	CalErr[1:0]	These bits indicate CS1 checksum status. 00: CS1 checksum correct (default) 11: CS1 checksum error. At the same time, the WarnOut pin is asserted.
13 - 12	AdjErr[1:0]	These bits indicate CS2 checksum status. 00: CS2 checksum correct (default) 11: CS2 checksum error.
11 - 8	-	Reserved.
7	LNchange	This bit indicates whether there is any change of the metering line (L line and N line). 0: metering line no change (default) 1: metering line changed
6	-	Reserved.
5	RevPchg	This bit indicates whether there is any change with the direction of active energy. 0: direction of active energy no change (default) 1: direction of active energy changed This status is enabled by the RevPEn bit (FuncEn, 02H).
4 - 2	-	Reserved.
1	SagWarn	This bit indicates the voltage sag status. 0: no voltage sag (default) 1: voltage sag Voltage sag is enabled by the SagEn bit (FuncEn, 02H). Voltage sag status can also be reported by the WarnOut pin. It is enabled by the SagWo bit(FuncEn, 02H).
0	-	Reserved.

Note: Any of the above events will prompt the IRQ pin to be asserted, which can be supplied to external MCU as an interrupt.

FuncEn
Function Enable

Address: 02H
Type: Read/Write
Default Value: 000CH

15	14	13	12	11	10	9	8
-	-	-	-	-	-	-	-
7	6	5	4	3	2	1	0
-	-	SagEn	SagWo	-	RevPEn	-	-

Bit	Name	Description
15 - 6	-	Reserved.
5	SagEn	This bit determines whether to enable the voltage sag interrupt. 0: disable (default) 1: enable
4	SagWo	This bit determines whether to enable voltage sag to be reported by the WarnOut pin. 0: disable (default) 1: enable
3	-	Reserved.
2	RevPEn	This bit determines whether to enable the direction change interrupt of active energy. 0: disable 1: enable (default)
1 - 0	-	Reserved.

SagTh
Voltage Sag Threshold

Address: 03H
Type: Read/Write
Default Value: 1D6AH

15	14	13	12	11	10	9	8
SagTh15	SagTh14	SagTh13	SagTh12	SagTh11	SagTh10	SagTh9	SagTh8
7	6	5	4	3	2	1	0
SagTh7	SagTh6	SagTh5	SagTh4	SagTh3	SagTh2	SagTh1	SagTh0

Bit	Name	Description
15 - 0	SagTh[15:0]	Voltage sag threshold configuration. Data format is XXX.XX. Unit is V. The power-on value of SagTh is 1D6AH, which is calculated by 22000*sqrt(2)*0.78/(4*Ugain/32768) For details, please refer to application note 46101.

SmallPMod
Small-Power Mode

Address: 04H
Type: Read/Write
Default Value: 0000H

15	14	13	12	11	10	9	8
SmallPMod15	SmallPMod14	SmallPMod13	SmallPMod12	SmallPMod11	SmallPMod10	SmallPMod9	SmallPMod8
7	6	5	4	3	2	1	0
SmallPMod7	SmallPMod6	SmallPMod5	SmallPMod4	SmallPMod3	SmallPMod2	SmallPMod1	SmallPMod0

Bit	Name	Description
15 - 0	SmallP-Mod[15:0]	Small-power mode command. A987H: small-power mode. The relationship between the register value of L line and N line active power in small-power mode and normal mode is: power in normal mode = power in small-power mode *10*Igain*Ugain /2^42 Others: Normal mode. Small-power mode is mainly used in the power offset calibration.

LastSPIData
Last Read/Write SPI Value

Address: 06H
Type: Read
Default Value: 0000H

15	14	13	12	11	10	9	8
LastSPIData15	LastSPIData14	LastSPIData13	LastSPIData12	LastSPIData11	LastSPIData10	LastSPIData9	LastSPIData8
7	6	5	4	3	2	1	0
LastSPIData7	LastSPIData6	LastSPIData5	LastSPIData4	LastSPIData3	LastSPIData2	LastSPIData1	LastSPIData0

Bit	Name	Description
15 - 0	LastSPI-Data[15:0]	This register stores the data that is just read or written through the SPI interface. Refer to Table-7 and Table-8.

5.3 METERING/ MEASUREMENT CALIBRATION AND CONFIGURATION

5.3.1 METERING CALIBRATION AND CONFIGURATION REGISTER

CalStart
Calibration Start Command

Address: 20H
Type: Read/Write
Default Value: 6886H

15	14	13	12	11	10	9	8
CalStart15	CalStart14	CalStart13	CalStart12	CalStart11	CalStart10	CalStart9	CalStart8
7	6	5	4	3	2	1	0
CalStart7	CalStart6	CalStart5	CalStart4	CalStart3	CalStart2	CalStart1	CalStart0

Bit	Name	Description
15 - 0	CalStart[15:0]	Metering calibration start command: 6886H: Power-on value. Metering function is disabled. 5678H: Metering calibration startup command. After 5678H is written to this register, registers 21H-2BH resume to their power-on values. The M90E25 starts to meter and output energy pulses regardless of the correctness of diagnosis. The CalErr[1:0] bits (SysStatus, 01H) are not set and the WarnOut/IRQ pins do not report any warning/interrupt. 8765H: Check the correctness of the 21H-2BH registers. If correct, normal metering. If not correct, metering function is disabled, the CalErr[1:0] bits (SysStatus, 01H) are set and the WarnOut/IRQ pins report warning/interrupt. Others: Metering function is disabled. The CalErr[1:0] bits (SysStatus, 01H) are set and the WarnOut/IRQ pins report warning/interrupt.

PLconstH
High Word of PL_Constant

Address: 21H
Type: Read/Write
Default Value: 0015H

15	14	13	12	11	10	9	8
PLconstH15	PLconstH14	PLconstH13	PLconstH12	PLconstH11	PLconstH10	PLconstH9	PLconstH8
7	6	5	4	3	2	1	0
PLconstH7	PLconstH6	PLconstH5	PLconstH4	PLconstH3	PLconstH2	PLconstH1	PLconstH0

Bit	Name	Description
15 - 0	PLcon-stH[15:0]	The PLconstH[15:0] and PLconstL[15:0] bits are high word and low word of PL_Constant respectively. PL_Constant is a constant which is proportional to the sampling ratios of voltage and current, and inversely proportional to the Meter Constant. PL_Constant is a threshold for energy calculated inside the chip, i.e., energy larger than PL_Constant will be accumulated in the corresponding energy registers and then output on CF1. It is suggested to set PL_constant as a multiple of 4 so as to double or redouble Meter Constant in low current state to save verification time. Note: PLconstH takes effect after PLconstL are configured. For details, please refer to application note 46101.

PLconstL
Low Word of PL_Constant

Address: 22H
Type: Read/Write
Default Value: D174H

15	14	13	12	11	10	9	8
PLconstL15	PLconstL14	PLconstL13	PLconstL12	PLconstL11	PLconstL10	PLconstL9	PLconstL8
7	6	5	4	3	2	1	0
PLconstL7	PLconstL6	PLconstL5	PLconstL4	PLconstL3	PLconstL2	PLconstL1	PLconstL0

Bit	Name	Description
15 - 0	PLcon-stL[15:0]	The PLconstH[15:0] and PLconstL[15:0] bits are high word and low word of PL_Constant respectively. It is suggested to set PL_constant as a multiple of 4. For details, please refer to application note 46101.

Lgain
L Line Calibration Gain

Address: 23H
Type: Read/Write
Default Value: 0000H

15	14	13	12	11	10	9	8
Lgain15	Lgain14	Lgain13	Lgain12	Lgain11	Lgain10	Lgain9	Lgain8
7	6	5	4	3	2	1	0
Lgain7	Lgain6	Lgain5	Lgain4	Lgain3	Lgain2	Lgain1	Lgain0

Bit	Name	Description
15 - 0	Lgain[15:0]	L line calibration gain. For details, please refer to application note 46101.

Lphi
L Line Calibration Angle

Address: 24H
Type: Read/Write
Default Value: 0000H

15	14	13	12	11	10	9	8
Lphi15	-	-	-	-	-	Lphi9	Lphi8
7	6	5	4	3	2	1	0
Lphi7	Lphi6	Lphi5	Lphi4	Lphi3	Lphi2	Lphi1	Lphi0

Bit	Name	Description
15 - 0	Lphi[15:0]	L line calibration phase angle. For details, please refer to application note 46101.

Ngain
N Line Calibration Gain

Address: 25H
Type: Read/Write
Default Value: 0000H

15	14	13	12	11	10	9	8
Ngain15	Ngain14	Ngain13	Ngain12	Ngain11	Ngain10	Ngain9	Ngain8
7	6	5	4	3	2	1	0
Ngain7	Ngain6	Ngain5	Ngain4	Ngain3	Ngain2	Ngain1	Ngain0

Bit	Name	Description
15 - 0	Ngain[15:0]	N line calibration gain. For details, please refer to application note 46101.

Nphi
N Line Calibration Angle

Address: 26H
Type: Read/Write
Default Value: 0000H

15	14	13	12	11	10	9	8
Nphi15	-	-	-	-	-	Nphi9	Nphi8
7	6	5	4	3	2	1	0
Nphi7	Nphi6	Nphi5	Nphi4	Nphi3	Nphi2	Nphi1	Nphi0

Bit	Name	Description
15 - 0	Nphi[15:0]	N line calibration phase angle. For details, please refer to application note 46101.

PStartTh
Active Startup Power Threshold

Address: 27H
Type: Read/Write
Default Value: 08BDH

15	14	13	12	11	10	9	8
PStartTh15	PStartTh14	PStartTh13	PStartTh12	PStartTh11	PStartTh10	PStartTh9	PStartTh8
7	6	5	4	3	2	1	0
PStartTh7	PStartTh6	PStartTh5	PStartTh4	PStartTh3	PStartTh2	PStartTh1	PStartTh0

Bit	Name	Description
15 - 0	PStartTh[15:0]	Active startup power threshold. For details, please refer to application note 46101.

PNolTh
Active No-Load Power Threshold

Address: 28H
Type: Read/Write
Default Value: 0000H

15	14	13	12	11	10	9	8
PNolTh15	PNolTh14	PNolTh13	PNolTh12	PNolTh11	PNolTh10	PNolTh9	PNolTh8
7	6	5	4	3	2	1	0
PNolTh7	PNolTh6	PNolTh5	PNolTh4	PNolTh3	PNolTh2	PNolTh1	PNolTh0

Bit	Name	Description
15 - 0	PNolTh[15:0]	Active no-load power threshold. For details, please refer to application note 46101.

MMode
Metering Mode Configuration

Address: 2BH
Type: Read/Write
Default Value: 9422H

15	14	13	12	11	10	9	8
Lgain2	Lgain1	Lgain0	Ngain1	Ngain0	LNSel	DisHPF1	DisHPF0
7	6	5	4	3	2	1	0
Amod	-	ZXCon1	ZXCon0	Pthresh3	Pthresh2	Pthresh1	Pthresh0

Bit	Name	Description
15 - 13	Lgain[2:0]	L line current gain, default value is '100'. **Lgain2 / Lgain1 / Lgain0 / Current Channel Gain** 1 / X / X / 1 0 / 0 / 0 / 4 0 / 0 / 1 / 8 0 / 1 / 0 / 16 0 / 1 / 1 / 24
12 - 11	Ngain[1:0]	N line current gain 00: 2 01: 4 10: 1 (default) 11: 1
10	LNSel	This bit specifies metering as L line or N line when metering mode is set to flexible mode by MMD1 and MMD0 pins. 0: N line 1: L line (default)
9 - 8	DisHPF[1:0]	These bits configure the High Filter Pass (HPF) after ADC. There are two first-order HPF in serial: HPF1 and HPF0. The configuration are applicable to all channels: **DisHPF1 / DisHPF 0 / HPF Configuration** 0 / 0 / enable HPF1 and HPF0 (default) 0 / 1 / enable HPF1, disable HPF0; 1 / 0 / disable HPF1, enable HPF0; 1 / 1 / disable HPF1 and HPF0
7	Amod	CF1 output for active power: 0: forward or reverse energy pulse output (default) 1: absolute energy pulse output
6	-	Reserved.

<table>
<tr><td>5 - 4</td><td>Zxcon[1:0]</td><td>These bits configure zero-crossing mode. The ZX pin outputs 5ms-width high level when voltage crosses zero.
00: positive zero-crossing
01: negative zero-crossing
10: all zero-crossing: both positive and negative zero-crossing (default)
11: no zero-crossing output</td></tr>
<tr><td>3 - 0</td><td>Pthresh[3:0]</td><td>These bits configure the L line and N line power difference threshold in anti-tampering mode.
<table>
<tr><th>Pthresh 3</th><th>Pthresh 2</th><th>Pthresh 1</th><th>Pthresh0</th><th>Threshold</th></tr>
<tr><td>0</td><td>0</td><td>0</td><td>0</td><td>12.5%</td></tr>
<tr><td>0</td><td>0</td><td>0</td><td>1</td><td>6.25%</td></tr>
<tr><td>0</td><td>0</td><td>1</td><td>0</td><td>3.125% (default)</td></tr>
<tr><td>0</td><td>0</td><td>1</td><td>1</td><td>1.5625%</td></tr>
<tr><td>0</td><td>1</td><td>0</td><td>0</td><td>1%</td></tr>
<tr><td>0</td><td>1</td><td>0</td><td>1</td><td>2%</td></tr>
<tr><td>0</td><td>1</td><td>1</td><td>0</td><td>3%</td></tr>
<tr><td>0</td><td>1</td><td>1</td><td>1</td><td>4%</td></tr>
<tr><td>1</td><td>0</td><td>0</td><td>0</td><td>5%</td></tr>
<tr><td>1</td><td>0</td><td>0</td><td>1</td><td>6%</td></tr>
<tr><td>1</td><td>0</td><td>1</td><td>0</td><td>7%</td></tr>
<tr><td>1</td><td>0</td><td>1</td><td>1</td><td>8%</td></tr>
<tr><td>1</td><td>1</td><td>0</td><td>0</td><td>9%</td></tr>
<tr><td>1</td><td>1</td><td>0</td><td>1</td><td>10%</td></tr>
<tr><td>1</td><td>1</td><td>1</td><td>0</td><td>11%</td></tr>
<tr><td>1</td><td>1</td><td>1</td><td>1</td><td>12%</td></tr>
</table>
</td></tr>
</table>

CS1
Checksum 1

Address: 2CH
Type: Read/Write
Default Value: 0000H

15	14	13	12	11	10	9	8
CS1_15	CS1_14	CS1_13	CS1_12	CS1_11	CS1_10	CS1_9	CS1_8
7	6	5	4	3	2	1	0
CS1_7	CS1_6	CS1_5	CS1_4	CS1_3	CS1_2	CS1_1	CS1_0

Bit	Name	Description
15 - 0	CS1[15:0]	The CS1 register should be written after the 21H-2BH registers are written. Suppose the high byte and the low byte of the 21H-2BH registers are shown in below table.

Register Address	High Byte	Low Byte
21H	H_{21}	L_{21}
22H	H_{22}	L_{22}
23H	H_{23}	L_{23}
24H	H_{24}	L_{24}
25H	H_{25}	L_{25}
26H	H_{26}	L_{26}
27H	H_{27}	L_{27}
28H	H_{28}	L_{28}
29H	H_{29}	L_{29}
2AH	H_{2A}	L_{2A}
2BH	H_{2B}	L_{2B}

The calculation of the CS1 register is as follows:

The low byte of 2CH register is: $\mathbf{L_{2C}}$=MOD($\mathbf{H_{21}}$+$\mathbf{H_{22}}$+...+$\mathbf{H_{2B}}$+$\mathbf{L_{21}}$+$\mathbf{L_{22}}$+...+$\mathbf{L_{2B}}$, 2^8)
The high byte of 2CH register is: $\mathbf{H_{2C}}$=$\mathbf{H_{21}}$ XOR $\mathbf{H_{22}}$ XOR ... XOR $\mathbf{H_{2B}}$ XOR $\mathbf{L_{21}}$ XOR $\mathbf{L_{22}}$ XOR ... XOR $\mathbf{L_{2B}}$
A part of registers are not used. These registers can be dealed as 0000H in CS calculation.

The M90E25 calculates CS1 regularly. If the value of the CS1 register and the calculation by the M90E25 is different when CalStart=8765H, the CalErr[1:0] bits (SysStatus, 01H) are set and the WarnOut and IRQ pins are asserted.
Note: The readout value of the CS1 register is the calculation by the M90E25, which is different from what is written.

5.3.2 MEASUREMENT CALIBRATION REGISTER

AdjStart
Measurement Calibration Start Command

Address: 30H
Type: Read/Write
Default Value: 6886H

15	14	13	12	11	10	9	8
AdjStart15	AdjStart14	AdjStart13	AdjStart12	AdjStart11	AdjStart10	AdjStart9	AdjStart8
7	6	5	4	3	2	1	0
AdjStart7	AdjStart6	AdjStart5	AdjStart4	AdjStart3	AdjStart2	AdjStart1	AdjStart0

Bit	Name	Description
15 - 0	AdjStart[15:0]	Measurement Calibration Start Command 6886H: Power-on value. No measurement. 5678H: Measurement calibration startup command. After 5678H is written to this register, registers 31H-3AH resume to their power-on values. The M90E25 starts to measure regardless of the correctness of diagnosis. The AdjErr[1:0] bits (SysStatus, 01H) are not set and the IRQ pin does not report any interrupt. 8765H: Check the correctness of the 31H-3AH registers. If correct, normal measurement. If not correct, measurement function is disabled, the AdjErr[1:0] bits (SysStatus, 01H) are set and the IRQ pin reports interrupt. Others: No measurement. The AdjErr[1:0] bits (SysStatus, 01H) are set and the IRQ pin reports interrupt.

Ugain
Voltage rms Gain

Address: 31H
Type: Read/Write
Default Value: 6720H

15	14	13	12	11	10	9	8
Ugain15	Ugain14	Ugain13	Ugain12	Ugain11	Ugain10	Ugain9	Ugain8
7	6	5	4	3	2	1	0
Ugain7	Ugain6	Ugain5	Ugain4	Ugain3	Ugain2	Ugain1	Ugain0

Bit	Name	Description
15 - 0	Ugain[15:0]	Voltage rms Gain. For details, please refer to application note 46101. **Note:** the Ugain15 bit should only be '0'

IgainL
L Line Current rms Gain

Address: 32H
Type: Read/Write
Default Value: 7A13H

15	14	13	12	11	10	9	8
IgainL15	IgainL14	IgainL13	IgainL12	IgainL11	IgainL10	IgainL9	IgainL8
7	6	5	4	3	2	1	0
IgainL7	IgainL6	IgainL5	IgainL4	IgainL3	IgainL2	IgainL1	IgainL0

Bit	Name	Description
15 - 0	IgainL[15:0]	L Line Current rms Gain, For details, please refer to application note 46101.

IgainN
N Line Current rms Gain

Address: 33H
Type: Read/Write
Default Value: 7530H

15	14	13	12	11	10	9	8
IgainN15	IgainN14	IgainN13	IgainN12	IgainN11	IgainN10	IgainN9	IgainN8
7	6	5	4	3	2	1	0
IgainN7	IgainN6	IgainN5	IgainN4	IgainN3	IgainN2	IgainN1	IgainN0

Bit	Name	Description
15 - 0	IgainN[15:0]	N Line Current rms Gain. For details, please refer to application note 46101.

Uoffset
Voltage Offset

Address: 34H
Type: Read/Write
Default Value: 0000H

15	14	13	12	11	10	9	8
Uoffset15	Uoffset14	Uoffset13	Uoffset12	Uoffset11	Uoffset10	Uoffset9	Uoffset8
7	6	5	4	3	2	1	0
Uoffset7	Uoffset6	Uoffset5	Uoffset4	Uoffset3	Uoffset2	Uoffset1	Uoffset0

Bit	Name	Description
15 - 0	Uoffset[15:0]	Voltage offset. For calculation method, please refer to application note 46101.

IoffsetL
L Line Current Offset

Address: 35H
Type: Read/Write
Default Value: 0000H

15	14	13	12	11	10	9	8
IoffsetL15	IoffsetL14	IoffsetL13	IoffsetL12	IoffsetL11	IoffsetL10	IoffsetL9	IoffsetL8
7	6	5	4	3	2	1	0
IoffsetL7	IoffsetL6	IoffsetL5	IoffsetL4	IoffsetL3	IoffsetL2	IoffsetL1	IoffsetL0

Bit	Name	Description
15 - 0	IoffsetL[15:0]	L line current offset. For calculation method, please refer to application note 46101.

IoffsetN
N Line Current Offset

Address: 36H
Type: Read/Write
Default Value: 0000H

15	14	13	12	11	10	9	8
IoffsetN15	IoffsetN14	IoffsetN13	IoffsetN12	IoffsetN11	IoffsetN10	IoffsetN9	IoffsetN8
7	6	5	4	3	2	1	0
IoffsetN7	IoffsetN6	IoffsetN5	IoffsetN4	IoffsetN3	IoffsetN2	IoffsetN1	IoffsetN0

Bit	Name	Description
15 - 0	IoffsetN[15:0]	N line current offset. For calculation method, please refer to application note 46101.

PoffsetL
L Line Active Power Offset

Address: 37H
Type: Read/Write
Default Value: 0000H

15	14	13	12	11	10	9	8
PoffsetL15	PoffsetL14	PoffsetL13	PoffsetL12	PoffsetL11	PoffsetL10	PoffsetL9	PoffsetL8
7	6	5	4	3	2	1	0
PoffsetL7	PoffsetL6	PoffsetL5	PoffsetL4	PoffsetL3	PoffsetL2	PoffsetL1	PoffsetL0

Bit	Name	Description
15 - 0	PoffsetL[15:0]	L line active power offset. Complement, MSB is the sign bit. For calculation method, please refer to application note 46101.

PoffsetN
N Line Active Power Offset

Address: 39H
Type: Read/Write
Default Value: 0000H

15	14	13	12	11	10	9	8
PoffsetN15	PoffsetN14	PoffsetN13	PoffsetN12	PoffsetN11	PoffsetN10	PoffsetN9	PoffsetN8
7	6	5	4	3	2	1	0
PoffsetN7	PoffsetN6	PoffsetN5	PoffsetN4	PoffsetN3	PoffsetN2	PoffsetN1	PoffsetN0

Bit	Name	Description
15 - 0	PoffsetN[15:0]	N line active power offset. Complement, MSB is the sign bit. For calculation method, please refer to application note 46101.

CS2
Checksum 2

Address: 3BH
Type: Read/Write
Default Value: 0000H

15	14	13	12	11	10	9	8
CS2_15	CS2_14	CS2_13	CS2_12	CS2_11	CS2_10	CS2_9	CS2_8
7	6	5	4	3	2	1	0
CS2_7	CS2_6	CS2_5	CS2_4	CS2_3	CS2_2	CS2_1	CS2_0

Bit	Name	Description
15 - 0	CS2[15:0]	The CS2 register should be written after the 31H-3AH registers are written. Suppose the high byte and the low byte of the 31H-3AH registers are shown in below table.

Register Address	High Byte	Low Byte
31H	H_{31}	L_{31}
32H	H_{32}	L_{32}
33H	H_{33}	L_{33}
34H	H_{34}	L_{34}
35H	H_{35}	L_{35}
36H	H_{36}	L_{36}
37H	H_{37}	L_{37}
38H	H_{38}	L_{38}
39H	H_{39}	L_{39}
3AH	H_{3A}	L_{3A}

The calculatiion of the CS2 register is as follows:

The low byte of 3BH register is: $\mathbf{L_{3B}}$=MOD($\mathbf{H_{31}}$+$\mathbf{H_{32}}$+...+$\mathbf{H_{3A}}$+$\mathbf{L_{31}}$+$\mathbf{L_{32}}$+...+$\mathbf{L_{3A}}$, 2^8)
The high byte of 3BH register is: $\mathbf{H_{3B}}$=$\mathbf{H_{31}}$ XOR $\mathbf{H_{32}}$ XOR ... XOR $\mathbf{H_{3A}}$ XOR $\mathbf{L_{31}}$ XOR $\mathbf{L_{32}}$ XOR ... XOR $\mathbf{L_{3A}}$

The M90E25 calculates CS2 regularly. If the value of the CS2 register and the calculation by the M90E25 is different when AdjStart=8765H, the AdjErr[1:0] bits (SysStatus, 01H) are set.
Note: The readout value of the CS2 register is the calculation by the XXXXXX, which is different from what is written.

5.4 ENERGY REGISTER

Theory of Energy Registers

The internal energy resolution is 0.01 pulse. Within 0.01 pulse, forward and reverse energy are counteracted. When energy exceeds 0.01 pulse, the respective forward/reserve energy is increased. The forward and reverse energy are not counteracted in absolute energy registers. Take the example of active energy, suppose:
T0: Forward energy is 12.34 pulses and reverse energy is 1.23 pulses;
From T0 to T1: 0.005 forward pulse appeared
From T1 to T2: 0.004 reverse pulse appeared
From T2 to T3: 0.003 reverse pulse appeared

	T0	T1	T2	T3
Forward Active Pulse	12.34	12.345	12.341	12.34
Reserve Active Pulse	1.23	1.23	1.23	1.232
Absolute Active Pulse	13.57	13.575	13.579	13.582

When forward/reverse energy or absolute energy reaches 0.1 pulse, the respective register is updated. When forward/reverse energy or absolute energy reaches 1 pulse, the CF1 pins outputs pulse and the REVP/REVQ bits (EnStatus, 46H) are updated.
Absolute energy might be more than the sum of forward and reverse energies. If “consistency” is required between absolute energy and forward/reverse energy in system application, absolute energy can be obtained by calculating the readout of the forward and reverse energy registers.

APenergy
Forward Active Energy

Address: 40H
Type: Read/Clear
Default Value: 0000H

15	14	13	12	11	10	9	8
APenergy15	APenergy14	APenergy13	APenergy12	APenergy11	APenergy10	APenergy9	APenergy8
7	6	5	4	3	2	1	0
APenergy7	APenergy6	APenergy5	APenergy4	APenergy3	APenergy2	APenergy1	APenergy0

Bit	Name	Description
15 - 0	APen-ergy[15:0]	Forward active energy; cleared after read. Data format is XXXX.X pulses. Resolution is 0.1 pulse. Maximum is 6553.5 pulses. When the accumulation of this register has achieved FFFFH, the continuation accumulation will return to 0000H.

ANenergy
Reverse Active Energy

Address: 41H
Type: Read/Clear
Default Value: 0000H

15	14	13	12	11	10	9	8
ANenergy15	ANenergy14	ANenergy13	ANenergy12	ANenergy11	ANenergy10	ANenergy9	ANenergy8
7	6	5	4	3	2	1	0
ANenergy7	ANenergy6	ANenergy5	ANenergy4	ANenergy3	ANenergy2	ANenergy1	ANenergy0

Bit	Name	Description
15 - 0	ANen-ergy[15:0]	Reverse active energy, cleared after read. Data format is XXXX.X pulses. Resolution is 0.1 pulse. Maximum is 6553.5 pulses. When the accumulation of this register has achieved FFFFH, the continuation accumulation will return to 0000H.

ATenergy
Absolute Active Energy

Address: 42H
Type: Read/Clear
Default Value: 0000H

15	14	13	12	11	10	9	8
ATenergy15	ATenergy14	ATenergy13	ATenergy12	ATenergy11	ATenergy10	ATenergy9	ATenergy8
7	6	5	4	3	2	1	0
ATenergy7	ATenergy6	ATenergy5	ATenergy4	ATenergy3	ATenergy2	ATenergy1	ATenergy0

Bit	Name	Description
15 - 0	ATen-ergy[15:0]	Absolute active energy, cleared after read. Data format is XXXX.X pulses. Resolution is 0.1 pulse. Maximum is 6553.5 pulses. When the accumulation of this register has achieved FFFFH, the continuation accumulation will return to 0000H.

EnStatus
Metering Status

Address: 46H
Type: Read
Default Value After Power On: C800H

15	14	13	12	11	10	9	8
-	Pnoload	-	RevP	Lline	-	-	-

7	6	5	4	3	2	1	0
-	-	-	-	-	-	LNMode1	LNMode0

Bit	Name	Description
15	-	Reserved.
14	Pnoload	This bit indicates whether the M90E25 is in active no-load status. 0: not active no-load state 1: active no-load state
13	-	Reserved.
12	RevP	This bit indicates the direction of the last CF1 (active output). 0: active forward 1: active reverse **Note:** This bit is always '0' when the CF1 output is configured to be absolute energy.
11	Lline	This bit indicates the current metering line in anti-tampering mode. 0: N line 1: L line
10 - 2	-	Reserved.
1 - 0	LNMode[1:0]	These bits indicate the configuration of MMD1 and MMD0 pins. Their relationship is as follows:

MMD 1	MMD 0	LNmod1	LNmod0	L/N Metering Mode
0	0	0	0	anti-tampering mode (larger power)
0	1	0	1	L line mode (fixed L line)
1	0	1	0	L+N mode (applicable for single-phase three-wire system)
1	1	1	1	Flexible mode (Line specified by the LNSel bit (MMode, 2BH))

5.5 MEASUREMENT REGISTER

Irms
L Line Current rms

Address: 48H
Type: Read
Default Value: 0000H

15	14	13	12	11	10	9	8
Irms15	Irms14	Irms13	Irms12	Irms11	Irms10	Irms9	Irms8
7	6	5	4	3	2	1	0
Irms7	Irms6	Irms5	Irms4	Irms3	Irms2	Irms1	Irms0

Bit	Name	Description
15 - 0	Irms[15:0]	L line current rms. Data format is XX.XXX, which corresponds to 0 ~ 65.535A. For cases when the current exceeds 65.535A, it is suggested to be handled by MCU in application. For example, the register value can be calibrated to 1/2 of the actual value during calibration, then multiplied by 2 in application.

Urms
Voltage rms

Address: 49H
Type: Read
Default Value: 0000H

15	14	13	12	11	10	9	8
Urms15	Urms14	Urms13	Urms12	Urms11	Urms10	Urms9	Urms8
7	6	5	4	3	2	1	0
Urms7	Urms6	Urms5	Urms4	Urms3	Urms2	Urms1	Urms0

Bit	Name	Description
15 - 0	Urms[15:0]	Voltage rms. Data format is XXX.XX, which corresponds to 0 ~ 655.35V.

Pmean
L Line Mean Active Power

Address: 4AH
Type: Read
Default Value: 0000H

15	14	13	12	11	10	9	8
Pmean15	Pmean14	Pmean13	Pmean12	Pmean11	Pmean10	Pmean9	Pmean8
7	6	5	4	3	2	1	0
Pmean7	Pmean6	Pmean5	Pmean4	Pmean3	Pmean2	Pmean1	Pmean0

Bit	Name	Description
15 - 0	Pmean[15:0]	L line mean active power. Complement, MSB is the sign bit. Data format is XX.XXX, which corresponds to -32.768~+32.768kW. If current is specially handle by MCU, the power of the M90E25 and the actual power have the same multiple relationship as the current.

Freq
Voltage Frequency

Address: 4CH
Type: Read
Default Value: 0000H

15	14	13	12	11	10	9	8
Freq15	Freq14	Freq13	Freq12	Freq11	Freq10	Freq9	Freq8
7	6	5	4	3	2	1	0
Freq7	Freq6	Freq5	Freq4	Freq3	Freq2	Freq1	Freq0

Bit	Name	Description
15 - 0	Freq[15:0]	Voltage frequency. Data format is XX.XX. Frequency measurement range is 45.00~65.00Hz. For example, 1388H corresponds to 50.00Hz.

PowerF
L Line Power Factor

Address: 4DH
Type: Read
Default Value: 0000H

15	14	13	12	11	10	9	8
PowerF15	PowerF14	PowerF13	PowerF12	PowerF11	PowerF10	PowerF9	PowerF8
7	6	5	4	3	2	1	0
PowerF7	PowerF6	PowerF5	PowerF4	PowerF3	PowerF2	PowerF1	PowerF0

Bit	Name	Description
15 - 0	PowerF[15:0]	L line power factor. Signed, MSB is the sign bit. Data format is X.XXX. Power factor range: -1.000~+1.000. For example, 03E 8H corresponds to the power factor of 1.000, and 83E8H corresponds to the power factor of -1.000.

Pangle
Phase Angle between Voltage and L Line Current

Address: 4EH
Type: Read
Default Value: 0000H

15	14	13	12	11	10	9	8
Pangle15	Pangle14	Pangle13	Pangle12	Pangle11	Pangle10	Pangle9	Pangle8
7	6	5	4	3	2	1	0
Pangle7	Pangle6	Pangle5	Pangle4	Pangle3	Pangle2	Pangle1	Pangle0

Bit	Name	Description
15 - 0	Pangle[15:0]	L line voltage current angle. Signed, MSB is the sign bit. Data format is XXX.X. Angle range: -180.0~+180.0 degree.

Smean
L Line Mean Apparent Power

Address: 4FH
Type: Read
Default Value: 0000H

15	14	13	12	11	10	9	8
Smean15	Smean14	Smean13	Smean12	Smean11	Smean10	Smean9	Smean8
7	6	5	4	3	2	1	0
Smean7	Smean6	Smean5	Smean4	Smean3	Smean2	Smean1	Smean0

Bit	Name	Description
15 - 0	Smean[15:0]	L line mean apparent power. Complement, MSB is always '0'. Data format is XX.XXX, which corresponds to 0~+32.767kVA. If current is specially handled by MCU, the power of the M90E25 and the actual power have the same multiple relationship as the current.

Irms2
N Line Current rms

Address: 68H
Type: Read
Default Value: 0000H

15	14	13	12	11	10	9	8
Irms2_15	Irms2_14	Irms2_13	Irms2_12	Irms2_11	Irms2_10	Irms2_9	Irms2_8
7	6	5	4	3	2	1	0
Irms2_7	Irms2_6	Irms2_5	Irms2_4	Irms2_3	Irms2_2	Irms2_1	Irms2_0

Bit	Name	Description
15 - 0	Irms2[15:0]	N line current rms. Data format is XX.XXX, which corresponds to 65.535A. For cases when the current exceeds 65.535A, it is suggested to be handled by MCU in application. For example, the register value can be calibrated to 1/2 of the actual value during calibration, then multiplied by 2 in application.

Pmean2
N Line Mean Active Power

Address: 6AH
Type: Read
Default Value: 0000H

15	14	13	12	11	10	9	8
Pmean2_15	Pmean2_14	Pmean2_13	Pmean2_12	Pmean2_11	Pmean2_10	Pmean2_9	Pmean2_8
7	6	5	4	3	2	1	0
Pmean2_7	Pmean2_6	Pmean2_5	Pmean2_4	Pmean2_3	Pmean2_2	Pmean2_1	Pmean2_0

Bit	Name	Description
15 - 0	Pmean2[15:0]	N line mean active power. Complement, MSB is the sign bit. Data format is XX.XXX, which corresponds to -32.768~+32.767kW. If current is specially handled by MCU, the power of the M90E25 and the actual power have the same multiple relationship as the current.

PowerF2
N Line Power Factor

Address: 6DH
Type: Read
Default Value: 0000H

15	14	13	12	11	10	9	8
PowerF2_15	PowerF2_14	PowerF2_13	PowerF2_12	PowerF2_11	PowerF2_10	PowerF2_9	PowerF2_8
7	6	5	4	3	2	1	0
PowerF2_7	PowerF2_6	PowerF2_5	PowerF2_4	PowerF2_3	PowerF2_2	PowerF2_1	PowerF2_0

Bit	Name	Description
15 - 0	PowerF2[15:0]	N line power factor. Signed, MSB is the sign bit. Data format is X.XXX. Power factor range: -1.000~+1.000. For example, 03E8H corresponds to the power factor of 1.000, and 83E8H corresponds to the power factor of -1.000.

Pangle2
Phase Angle between Voltage and N Line Current

Address: 6EH
Type: Read
Default Value: 0000H

15	14	13	12	11	10	9	8
Pangle2_15	Pangle2_14	Pangle2_13	Pangle2_12	Pangle2_11	Pangle2_10	Pangle2_9	Pangle2_8
7	6	5	4	3	2	1	0
Pangle2_7	Pangle2_6	Pangle2_5	Pangle2_4	Pangle2_3	Pangle2_2	Pangle2_1	Pangle2_0

Bit	Name	Description
15 - 0	Pangle2[15:0]	N line voltage current angle Signed, MSB is the sign bit. Data format is XXX.X. Angle range: -180.0~+180.0 degree.

Smean2
N Line Mean Apparent Power

Address: 6FH
Type: Read
Default Value: 0000H

15	14	13	12	11	10	9	8
Smean2_15	Smean2_14	Smean2_13	Smean2_12	Smean2_11	Smean2_10	Smean2_9	Smean2_8
7	6	5	4	3	2	1	0
Smean2_7	Smean2_6	Smean2_5	Smean2_4	Smean2_3	Smean2_2	Smean2_1	Smean2_0

Bit	Name	Description
15 - 0	Smean2[15:0]	N line mean apparent power Complement, MSB is always '0'. Data format is XX.XXX, which corresponds to 0~+32.767kVA. If current is specially handled by MCU, the power of M90E25 and the actual power have the same multiple relationship as the current.

6 ELECTRICAL SPECIFICATION

6.1 ELECTRICAL SPECIFICATION

Parameters and Description	Min.	Typical	Max.	Unit	Test Conditions and Comments
Accuracy					
DC Power Supply Rejection Ratio (PSRR)			**±0.1**	**%**	VDD=3.3V±0.3V, 100Hz, I=5A, V=220V, L line shunt resistor 150μΩ, N line CT 1000:1, sampling resistor 4.8Ω
AC Power Supply Rejection Ratio (PSRR)			**±0.1**	**%**	VDD=3.3V superimposes 400mVrms, 100Hz Sinusoidal signal, I=5A, V=220V, L line shunt resistor 150μΩ, N line CT 1000:1, sampling resistor 4.8Ω
Active Energy Error (Dynamic Range 5000:1)			**±0.1**	**%**	L line current gain is '24'; N line current gain is '1'
Channel Characteristics					
Sampling Frequency		**8**		**kHz**	
L Line Current Channel Equivalent Input Noise			**19.1**	$nV/\sqrt{Hz}$	Single side band noise (measured at 50Hz, and PGA gain is '24')
N Line Current Channel Equivalent Input Noise			**458.4**	$nV/\sqrt{Hz}$	Single side band noise (measured at 50Hz, and PGA gain is '1')
Voltage Channel Equivalent Input Noise			**458.4**	$nV/\sqrt{Hz}$	Single side band noise (measured at 50Hz, and PGA gain is '1')
Total Harmonic Distortion for Each Channel	**80**			**dB**	25°C, PGA gain is '1', 500mVrms input
Active Energy Metering Bandwidth		**4**		**kHz**	
Irms and Vrms Measurement Bandwidth		**4**		**kHz**	
Measurement Error			**±0.5**	**%**	
Analog Input					
L Line Current Channel Differential Input	**5μ**		**25m**	**Vrms**	PGA gain is '24'
	7.5μ		**37.5m**		PGA gain is '16'
	15μ		**75m**		PGA gain is '8'
	30μ		**150m**		PGA gain is '4'
	120μ		**600m**		PGA gain is '1'
N Line Current Channel Differential Input	**30μ**		**150m**	**Vrms**	PGA gain is '4'
	60μ		**300m**		PGA gain is '2'
	120μ		**600m**		PGA gain is '1'
Voltage Channel Differential Input	**120μ**		**600m**	**Vrms**	PGA gain is '1'
L Line Current Channel Input Impedance		**1**		**KΩ**	
N Line Current Channel Input Impedance		**50**		**KΩ**	
Voltage Channel Input Impedance		**50**		**KΩ**	
L Line Current Channel DC Offset			**10**	**mV**	PGA gain is '24'
N Line Current Channel DC Offset			**10**	**mV**	PGA gain is '1'
Voltage Channel DC Offset			**10**	**mV**	PGA gain is '1'
Reference					
On-Chip Reference	**1.398**	**1.417**	**1.440**	**V**	Reference voltage test mode
Reference Voltage Temperature Coefficient		**±15**	**±40**	**ppm/°C**	
Clock					
Crystal or External Clock		**8.192**		**MHz**	The Accuracy of crystal or external clock is ±100 ppm

SPI Interface					
SPI Interface Bit Rate	**200**		**160k**	**bps**	
Pulse Width					
CF1 Pulse Width		**80**		**ms**	If T ⩾ 160 ms, width=80ms; if T<160 ms, width = 0.5T. Refer to Section 6.6
ESD					
Machine Model (MM)	**400**			**V**	JESD22-A115
Charged Device Model (CDM)	**1000**			**V**	JESD22-C101
Human Body Model (HBM)	**4000**			**V**	JESD22-A114
Latch Up			**±100**	**mA**	JESD78A
Latch Up			**4.95**	**V**	JESD78A
Operating Conditions					
AVDD, Analog Power Supply	**2.8**	**3.3**	**3.6**	**V**	Metering precision guaranteed within 3.0V~3.6V.
DVDD, Digital Power Supply	**2.8**	**3.3**	**3.6**	**V**	Metering precision guaranteed within 3.0V~3.6V.
I_{AVDD}, Analog Current		**3.75**		**mA**	L line/ N line current channel and voltage channel are open
I_{DVDD}, Digital Current		**2.75**		**mA**	VDD=3.3V
DC Characteristics					
Digital Input High Level (all digital pins except OSCI)	**2.0**		**VDD+2.6**	**V**	VDD=3.3V±10%,
Digital Input High Level (OSCI)	**2.0**		**VDD+0.3**	**V**	VDD=3.3V±10%
Digital Input Low Level			**0.8**	**V**	VDD=3.3V±10%
Digital Input Leakage Current			**±1**	**µA**	VDD=3.6V, VI=VDD or GND
Digital Output Low Level (CF1)			**0.4**	**V**	VDD=3.3V, I_{OL}=10mA
Digital Output Low Level (IRQ, WarnOut, ZX, SDO)			**0.4**	**V**	VDD=3.3V, I_{OL}=5mA
Digital Output High Level (CF1)	**2.4**			**V**	VDD=3.3V, I_{OH}=-10mA
Digital Output High Level (IRQ, WarnOut, ZX, SDO)	**2.4**			**V**	VDD=3.3V, I_{OH}=-5mA
Digital Output Low Level (OSCO)			**0.4**	**V**	VDD=3.3V, I_{OL}=1mA
Digital Output High Level (OSCO)	**2.4**			**V**	VDD=3.3V, I_{OH}=-1mA

6.2 SPI INTERFACE TIMING

The SPI interface timing is as shown in Figure-7, Figure-8 and Table-10.

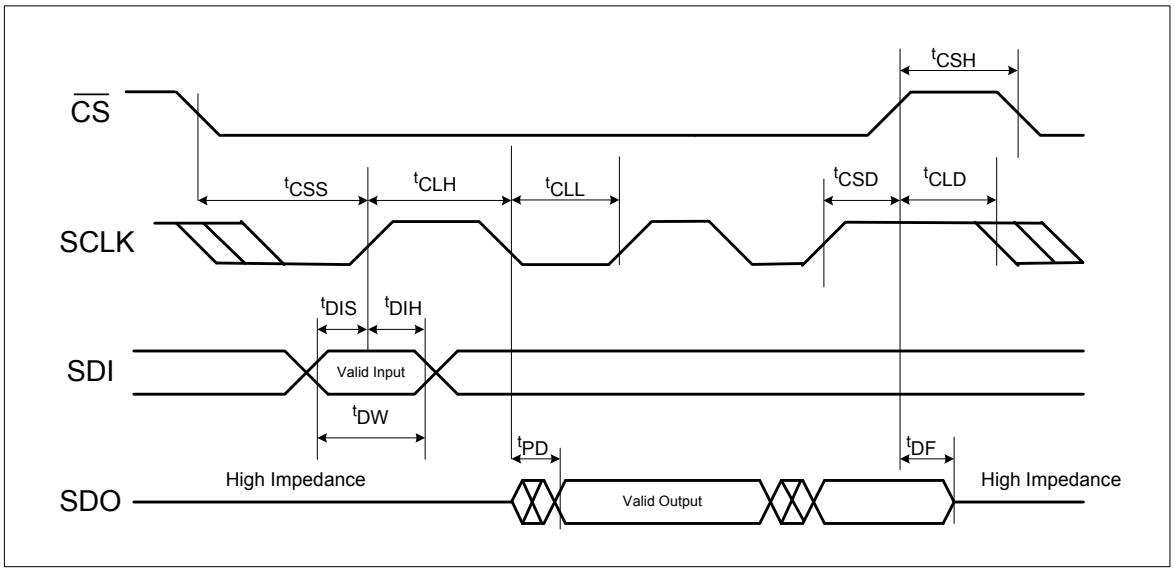

Figure-7 4-Wire SPI Timing Diagram

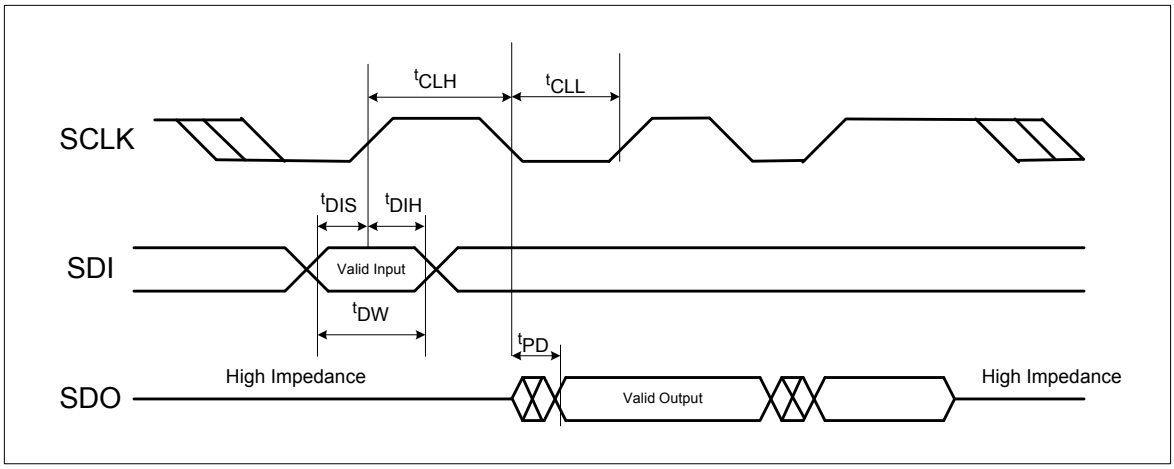

Figure-8 3-Wire SPI Timing Diagram

Table-10 SPI Timing Specification

Symbol	Description	Min.	Typical	Max.	Unit
t_{CSH} note 1	Minimum $\overline{CS}$ High Level Time	30T note 2+10			ns
t_{CSS} note 1	$\overline{CS}$ Setup Time	3T+10			ns
t_{CSD} note 1	$\overline{CS}$ Hold Time	30T+10			ns
t_{CLD} note 1	Clock Disable Time	1T			ns
t_{CLH}	Clock High Level Time	30T+10			ns
t_{CLL}	Clock Low Level Time	16T+10			ns
t_{DIS}	Data Setup Time	3T+10			ns
t_{DIH}	Data Hold Time	22T+10			ns
t_{DW}	Minimum Data Width	30T+10			ns
t_{PD}	Output Delay	14T		15T+20	ns
t_{DF} note 1	Output Disable Time			16T+20	ns

Note:
1. Not applicable for three-wire SPI.
2. T means SCLK cycle. T=122ns. (Typical value for four-wire SPI)

6.3 POWER ON RESET TIMING

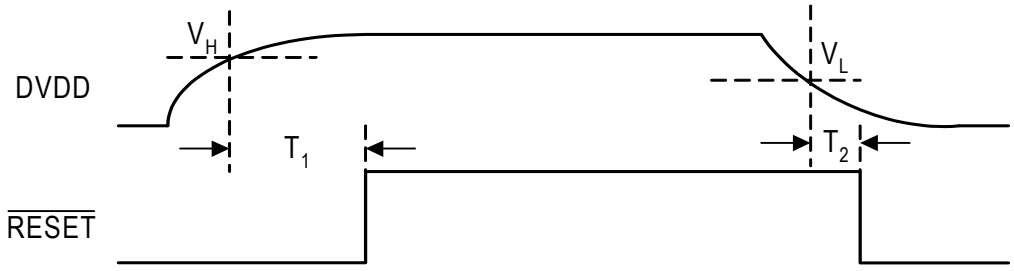

Figure-9 Power On Reset Timing Diagram

Table-11 Power On Reset Specification

Symbol	Description	Min.	Typical	Max.	Unit
V_H	Power On Trigger Voltage	**2.47**	**2.6**	**2.73**	**V**
V_L	Power Off Trigger Voltage	**2.185**	**2.3**	**2.415**	**V**
V_H-V_L	Hysteretic Voltage Difference	**0.285**	**0.3**	**0.315**	**V**
T_1	Delay Time After Power On	**5**			**ms**
T_2	Delay Time After Power Off	**10**			**µs**

6.4 ZERO-CROSSING TIMING

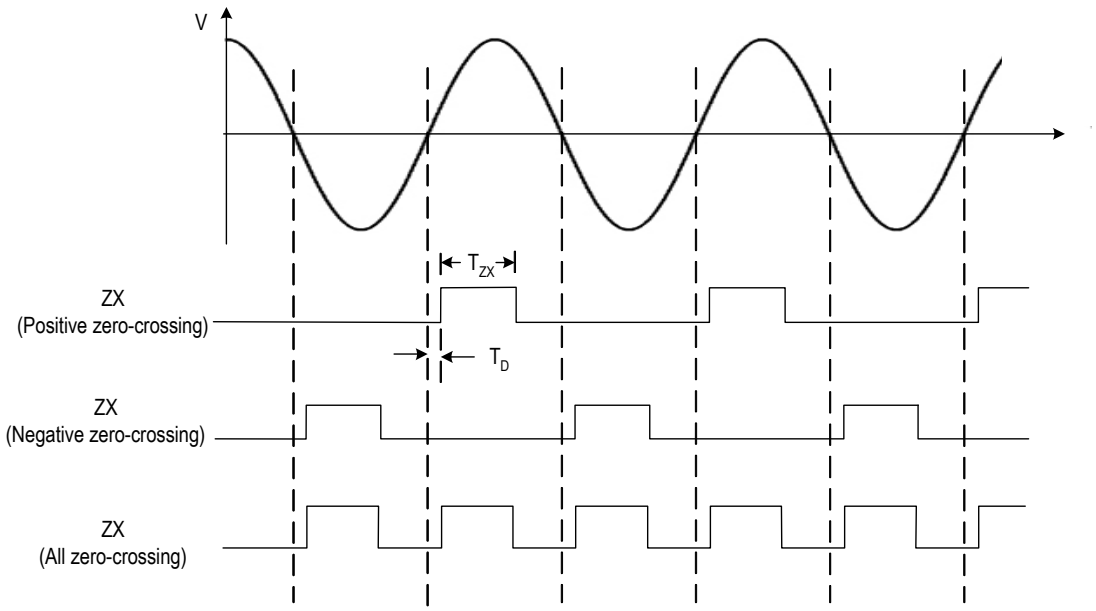

Figure-10 Zero-Crossing Timing Diagram

Table-12 Zero-Crossing Specification

Symbol	Description	Min.	Typical	Max.	Unit
T_{ZX}	High Level Width		**5**		**ms**
T_D	Delay Time			**0.5**	**ms**

6.5 VOLTAGE SAG TIMING

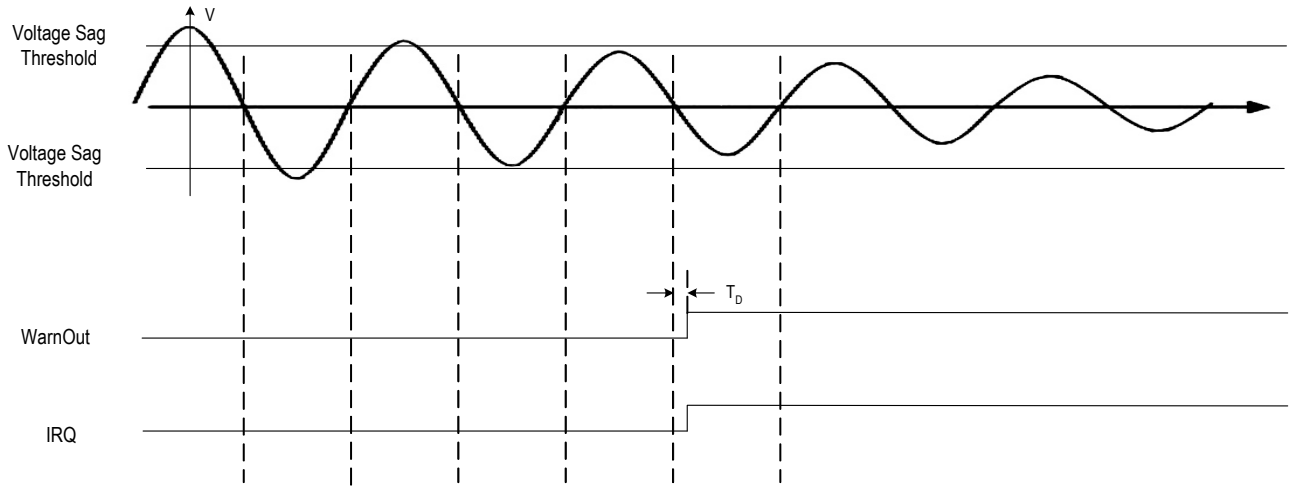

Figure-11 Voltage Sag Timing Diagram

Table-13 Voltage Sag Specification

Symbol	Description	Min.	Typical	Max.	Unit
T_D	Delay Time			**0.5**	**ms**

6.6 PULSE OUTPUT

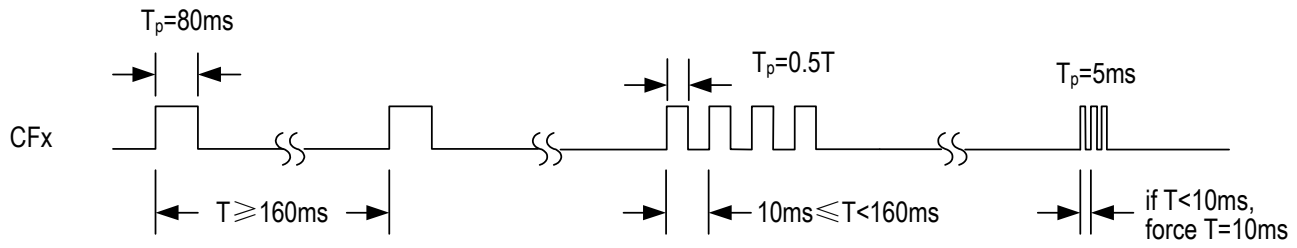

Figure-12 Output Pulse Width

6.7 ABSOLUTE MAXIMUM RATING

Parameter	Maximum Limit
Relative Voltage Between AVDD and AGND	-0.3V~3.7V
Relative Voltage Between DVDD and DGND	-0.3V~3.7V
Analog Input Voltage (I1P, I1N, I2P, I2N, VP, VN)	-1V~VDD
Digital Input Voltage	-0.3V~VDD+2.6V
Operating Temperature Range	-40~85 °C
Maximum Junction Temperature	150 °C

Package Type	Thermal Resistance θ_{JA}	Unit	Condition
Green SSOP28	63.2	°C/W	No Airflow

ORDERING INFORMATION

Atmel Ordering Code	Package	Carrier	Temperature Range
ATM90E25-YU-R	SSOP28	Tape&Reel	Industry (-40°C to +85°C)
ATM90E25-YU-B	SSOP28	Tube	Industry (-40°C to +85°C)

PACKAGE DIMENSIONS

TOP VIEW

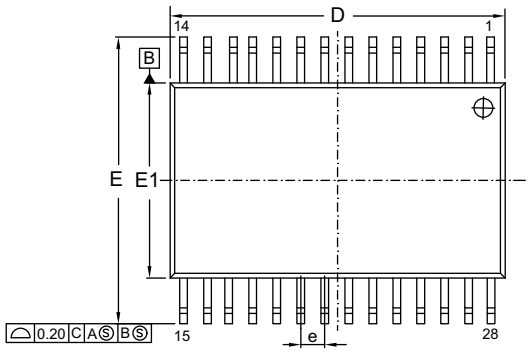

END VIEW

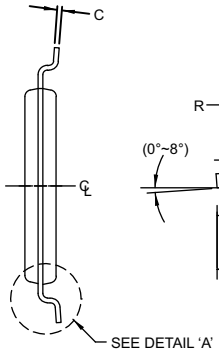

DETAIL 'A'

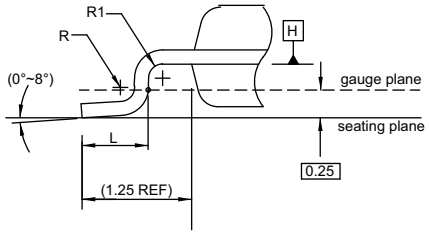

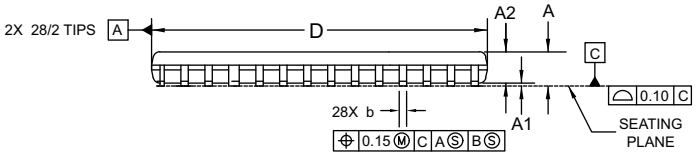

SIDE VIEW

COMMON DIMENSIONS
(Unit of Measure = mm)

SYMBOL	MIN	TYP	MAX	NOTE
A	1.73	1.86	1.99	
A1	0.05	0.13	0.21	
A2	1.68	1.73	1.78	
b	0.25	-	0.38	3
c	0.13	-	0.20	
D	10.07	10.20	10.33	2
E	7.65	7.80	7.90	
E1	5.20	5.30	5.38	2
e	0.65 BSC			
L	0.55	0.75	0.95	
R	0.09	-	-	
R1	0.09	-	-	

NOTE:

1. Refer to JEDEC drawing MO-150, Variation AH.
2. 'D' and 'E1" dimensions do not include mold flash or protrusions, but do include mold mismatch and are measured at datum plane 'H'. Mold flash or protrusion shall not exceed 0.20mm per side.
3. Dimension 'b' does not include dambar protrustion/ intrusion. Allowable dambar protrusion shall be 0.13mm total in excess of b dimesnion at maximum material condition. Dambar intrusion shall not reduce dimension b by more than 0.07mm at least material condition.

2/25/14

Atmel Package Drawing Contact: packagedrawings@atmel.com	TITLE 28Y, 28-lead 5.3 mm Body Width, 0.65mm pitch, 1.25mm lead length, Plastic Shrink Small Outline Package (SSOP)	GPC TBF	DRAWING NO. 28Y	REV. B

REVISION HISTORY

Doc. Rev.	Date	Comments
46001A	04/18/2014	Initial document release in Atmel.





Atmel Corporation 1600 Technology Drive, San Jose, CA 95110 USA **T:** (+1)(408) 441.0311 **F:** (+1)(408) 436.4200 | **www.atmel.com**

© 2014 Atmel Corporation. All rights reserved. / Rev.: Atmel-46001A-SE-M90E25-Datasheet_041814.

Atmel®, Atmel logo and combinations thereof, Enabling Unlimited Possibilities®, and others are registered trademarks or trademarks of Atmel Corporation or its subsidiaries. Other terms and product names may be trademarks of others.

DISCLAIMER: The information in this document is provided in connection with Atmel products. No license, express or implied, by estoppel or otherwise, to any intellectual property right is granted by this document or in connection with the sale of Atmel products. EXCEPT AS SET FORTH IN THE ATMEL TERMS AND CONDITIONS OF SALES LOCATED ON THE ATMEL WEBSITE, ATMEL ASSUMES NO LIABILITY WHATSOEVER AND DISCLAIMS ANY EXPRESS, IMPLIED OR STATUTORY WARRANTY RELATING TO ITS PRODUCTS INCLUDING, BUT NOT LIMITED TO, THE IMPLIED WARRANTY OF MERCHANTABILITY, FITNESS FOR A PARTICULAR PURPOSE, OR NON-INFRINGEMENT. IN NO EVENT SHALL ATMEL BE LIABLE FOR ANY DIRECT, INDIRECT, CONSEQUENTIAL, PUNITIVE, SPECIAL OR INCIDENTAL DAMAGES (INCLUDING, WITHOUT LIMITATION, DAMAGES FOR LOSS AND PROFITS, BUSINESS INTERRUPTION, OR LOSS OF INFORMATION) ARISING OUT OF THE USE OR INABILITY TO USE THIS DOCUMENT, EVEN IF ATMEL HAS BEEN ADVISED OF THE POSSIBILITY OF SUCH DAMAGES. Atmel makes no representations or warranties with respect to the accuracy or completeness of the contents of this document and reserves the right to make changes to specifications and products descriptions at any time without notice. Atmel does not make any commitment to update the information contained herein. Unless specifically provided otherwise, Atmel products are not suitable for, and shall not be used in, automotive applications. Atmel products are not intended, authorized, or warranted for use as components in applications intended to support or sustain life.

SAFETY-CRITICAL, MILITARY, AND AUTOMOTIVE APPLICATIONS DISCLAIMER: Atmel products are not designed for and will not be used in connection with any applications where the failure of such products would reasonably be expected to result in significant personal injury or death (“Safety-Critical Applications”) without an Atmel officer's specific written consent. Safety-Critical Applications include, without limitation, life support devices and systems, equipment or systems for the operation of nuclear facilities and weapons systems. Atmel products are not designed nor intended for use in military or aerospace applications or environments unless specifically designated by Atmel as military-grade. Atmel products are not designed nor intended for use in automotive applications unless specifically designated by Atmel as automotive-grade.