Customer Information Sheet

DRAWING No.: M83-LML3MINXX-0000-000	SHEET 2 OF 2	IF IN DOUBT - ASK	©	NOT TO SCALE	THIRD ANGLE PROJECTION	ALL DIMENSIONS IN mm

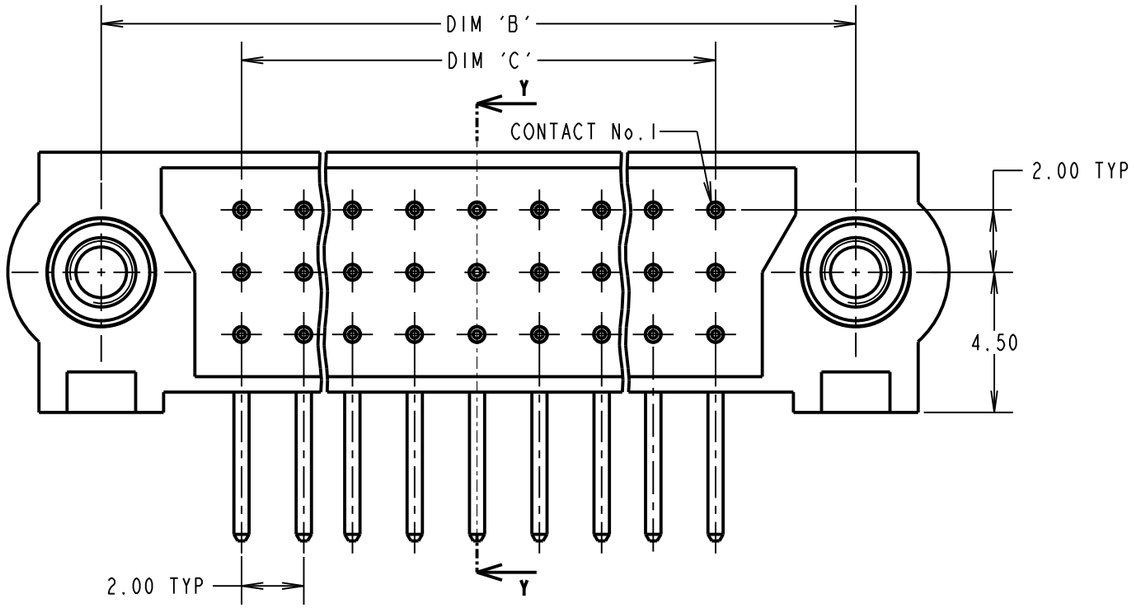

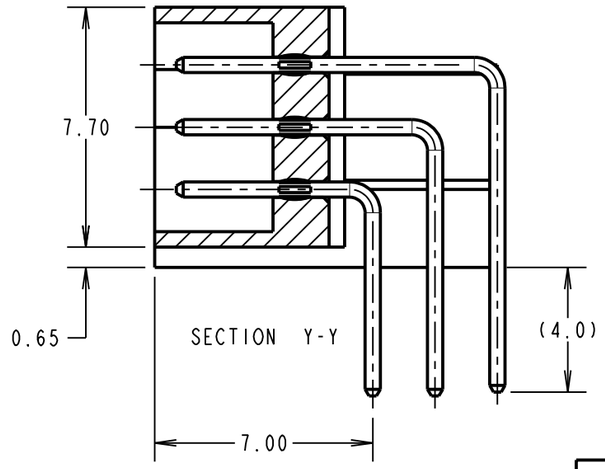

SPECIFICATIONS:
MATERIAL:
MOULDING = GLASS-FILLED PPS, UL94V-0, BLACK
JACKSCREW = STAINLESS STEEL
SIGNAL CONTACT = PHOSPHOR BRONZE
FINISH:
SIGNAL CONTACT = 0.75µ GOLD
ELECTRICAL:
CURRENT RATING AT 25°C = 3.0A MAX
CURRENT RATING AT 85°C = 2.2A MAX
WORKING VOLTAGE = 800V AC/DC
VOLTAGE PROOF = 1200V AC/DC
CONTACT RESISTANCE = 25 mΩ MAX
INSULATION RESISTANCE = 100 MΩ MIN
MECHANICAL:
DURABILITY = 500 OPERATIONS
ENVIRONMENTAL:
TEMPERATURE RANGE = -55°C TO +125°C
PACKING:
TRAY
FOR COMPLETE SPECIFICATION, SEE COMPONENT SPECIFICATION C005XX (LATEST ISSUE)

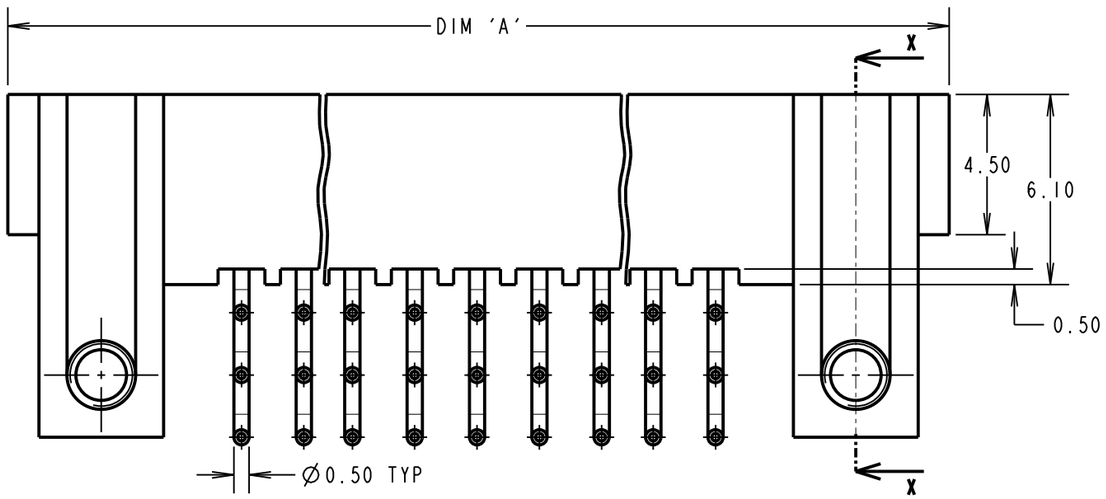

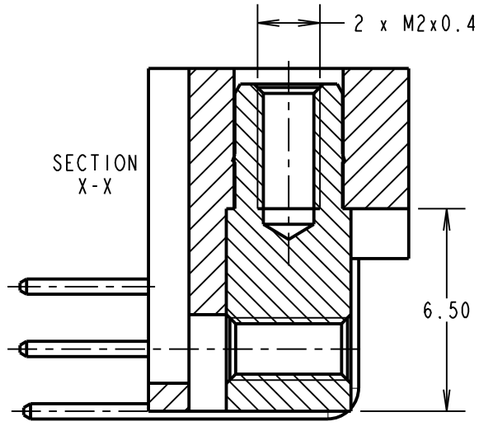

ORDER CODE:
M83-LML3MINXX-0000-000
TOTAL No. OF CONTACTS
18, 27, 36, 48, 54, 60, 96

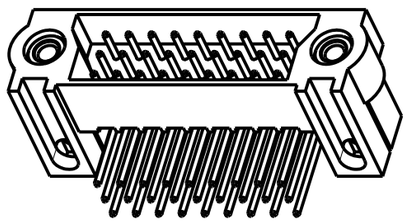

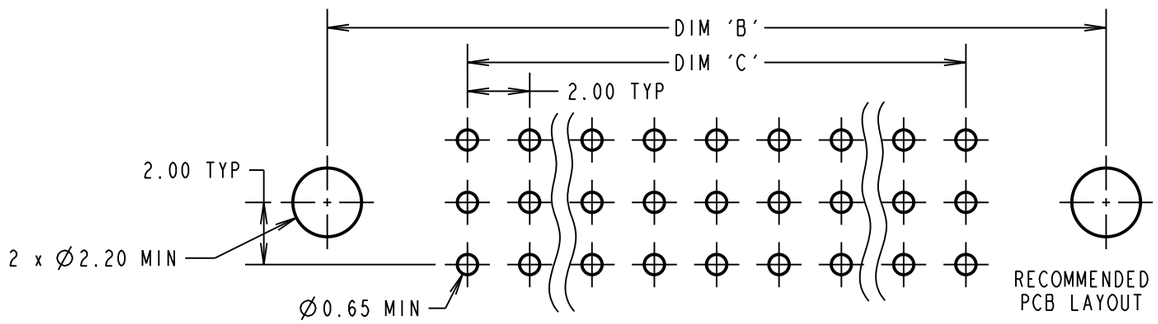

DIMENSION	CALCULATION
DIM 'A'	((TOTAL No. OF CONTACTS /3) x2) +13
DIM 'B'	((TOTAL No. OF CONTACTS /3) x2) +7
DIM 'C'	((TOTAL No. OF CONTACTS /3) x2) -2

EXAMPLE 1: CONNECTOR WITH 27 CONTACTS,
M83-LML3MIN27-0000-000
DIM 'A' = 31.00mm, DIM 'B' = 25.00mm, DIM 'C' = 16.00mm

EXAMPLE 2: CONNECTOR WITH 54 CONTACTS,
M83-LML3MIN54-0000-000
DIM 'A' = 49.00mm, DIM 'B' = 43.00mm, DIM 'C' = 34.00mm

NAME	ISS.	DATE	C/NOTE
MGP	3	29.10.12	11854

APPROVED: MGP
CHECKED: SB
DRAWN: R.ADDE
CUSTOMER REF.:
ASSEMBLY DRG:

HARWIN
www.harwin.com
technical@harwin.com

THIS DRAWING AND ANY INFORMATION OR DESCRIPTIVE MATTER SET OUT HEREON ARE CONFIDENTIAL AND COPYRIGHT PROPERTY OF THE HARWIN GROUP AND MUST NOT BE DISCLOSED, LOANED, COPIED OR USED FOR MANUFACTURING, TENDERING OR FOR ANY OTHER PURPOSE WITHOUT THEIR WRITTEN PERMISSION.

TOLERANCES
X. = ±1mm
X.X = ±0.25mm
X.XX = ±0.10mm
X.XXX = ±0.01mm
ANGLES = ±5°
UNLESS STATED

MATERIAL: SEE ABOVE
FINISH: SEE ABOVE
S/AREA: mm²

TITLE: JACKSCREW DATAMATE 3-ROW HORIZONTAL MALE ASSY
DRAWING NUMBER: M83-LML3MINXX-0000-000
SHT 2 OF 2