Customer Information Sheet

DRAWING No.: M83-LFCIFIN60-0000-000	SHEET 2 OF 2	IF IN DOUBT - ASK	©	NOT TO SCALE	THIRD ANGLE PROJECTION	ALL DIMENSIONS IN mm

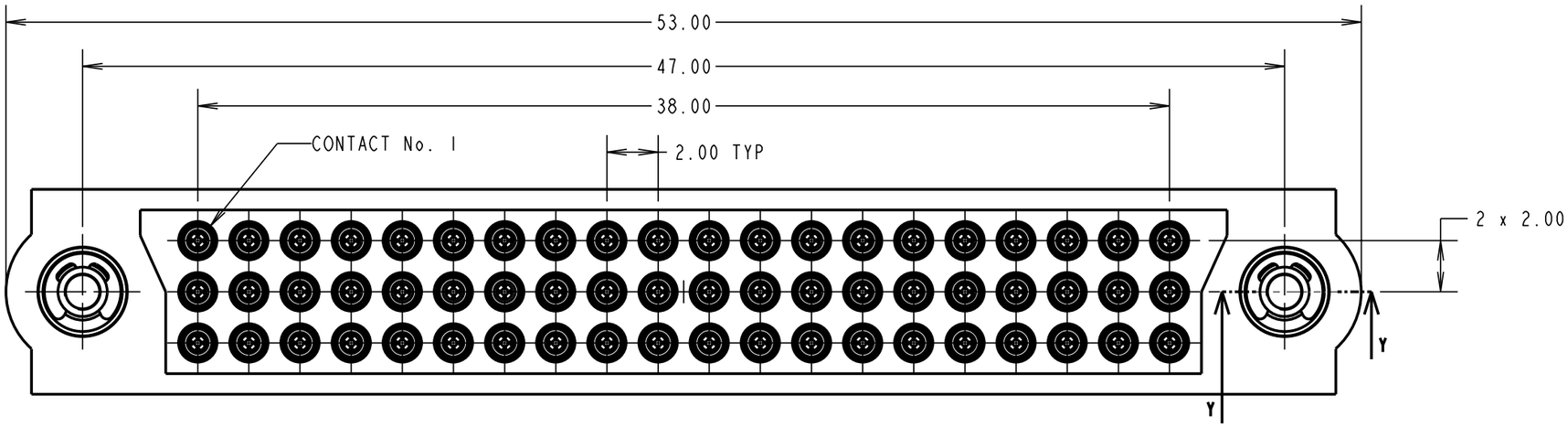

SPECIFICATIONS:
- MATERIAL:
  - MOULDING = GLASS-FILLED PPS, UL94V-0, BLACK
  - JACKSCREW = STAINLESS STEEL
  - CONTACT CLIP = BERYLLIUM COPPER
  - CONTACT SHELL = BRASS
- FINISH:
  - CONTACT CLIP = 0.3µ GOLD
  - CONTACT SHELL = 0.25-0.3µ GOLD
- ELECTRICAL:
  - CURRENT RATING AT 25°C = 3.0A MAX
  - CURRENT RATING AT 85°C = 2.2A MAX
  - WORKING VOLTAGE = 120V AC/DC
  - VOLTAGE PROOF = 360V AC/DC
  - CONTACT RESISTANCE = 25 mΩ MAX
  - INSULATION RESISTANCE = 100 MΩ MIN
- MECHANICAL:
  - DURABILITY = 500 OPERATIONS
  - INSERTION FORCE = 1.0N MAX
  - WITHDRAWAL FORCE = 0.2N MIN
- ENVIRONMENTAL:
  - TEMPERATURE RANGE = -55°C TO +125°C
- PACKING:
  - BAG

FOR COMPLETE SPECIFICATION, SEE COMPONENT SPECIFICATION C005XX (LATEST ISSUE)

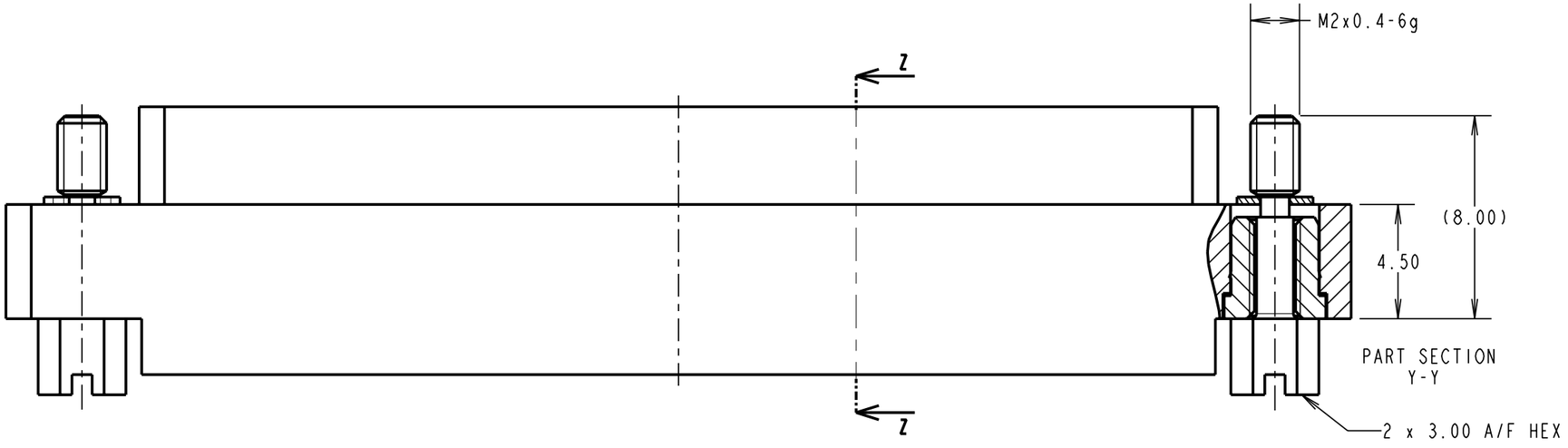

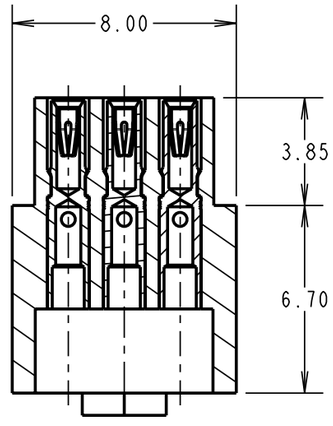

SECTION Z-Z

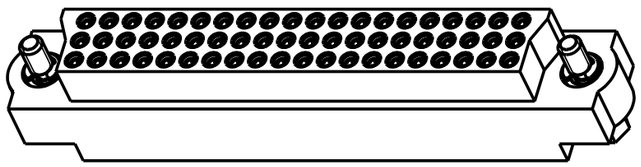

NOTES:
1. CONNECTORS ARE SUPPLIED WITH CONTACTS LOOSE.
2. FOR EXTRA CONTACTS, USE PART NUMBER M83-0130005.
3. RECOMMENDED WIRE TYPE = BS 3G 210 TYPE A, PTFE INSULATED 24-28 AWG. MAX INSULATION DIAMETER = Ø1.10mm, STRIP WIRE BY 2.00mm.
4. RECOMMENDED HAND CRIMP TOOL = M22520/2-01 WITH POSITIONER T5747, SEE INSTRUCTION SHEET IS-01 FOR DETAILS.
5. CONTACT INSERTION AND EXTRACTION TOOL = Z80-280, SEE INSTRUCTION SHEET IS-25 FOR DETAILS.

NAME	ISS.	DATE	C/NOTE
RA	A	11.03.08	----

APPROVED: R.ADDE
CHECKED: M.G.PLESTED
DRAWN: R.ADDE
CUSTOMER REF.:
ASSEMBLY DRG:

HARWIN

HARWIN USA	HARWIN Europe (UK)	HARWIN Asia
TEL: 603 893 5376	TEL: 023 9231 4545	TEL: +65 6 779 4909
FAX: 603 893 5396	FAX: 023 9231 4590	FAX: +65 6 779 3868
mis@harwin.com	mis@harwin.co.uk	mis@harwin.com.sg

THIS DRAWING AND ANY INFORMATION OR DESCRIPTIVE MATTER SET OUT HEREON ARE CONFIDENTIAL AND COPYRIGHT PROPERTY OF THE HARWIN GROUP AND MUST NOT BE DISCLOSED, LOANED, COPIED OR USED FOR MANUFACTURING, TENDERING OR FOR ANY OTHER PURPOSE WITHOUT THEIR WRITTEN PERMISSION.

TOLERANCES
X. = ±1mm
X.X = ±0.25mm
X.XX = ±0.10mm
X.XXX = ±0.01mm
ANGLES = ±5°
UNLESS STATED

MATERIAL: SEE ABOVE
FINISH: SEE ABOVE
S/AREA: mm²

TITLE: JACKSCREW DATAMATE 3-ROW CRIMP FEMALE ASSY (60-WAY)

DRAWING NUMBER: M83-LFCIFIN60-0000-000

SHT 2 OF 2