Customer Information Sheet

DRAWING No.: M80-681XXXXP	SHEET 2 OF 2	IF IN DOUBT - ASK	©	NOT TO SCALE	THIRD ANGLE PROJECTION	ALL DIMENSIONS IN mm

ASSEMBLY PART No.	No. OF CONTACTS	DIM 'X'	DIM 'Y'
M80-68104XXP	4	2.00	7.15
M80-68106XXP	6	4.00	9.15
M80-68108XXP	8	6.00	11.15
M80-68110XXP	10	8.00	13.15
M80-68112XXP	12	10.00	15.15
M80-68114XXP	14	12.00	17.15
M80-68116XXP	16	14.00	19.15
M80-68118XXP	18	16.00	21.15
M80-68120XXP	20	18.00	23.15
M80-68126XXP	26	24.00	29.15
M80-68134XXP	34	32.00	37.15
M80-68144XXP	44	42.00	47.15

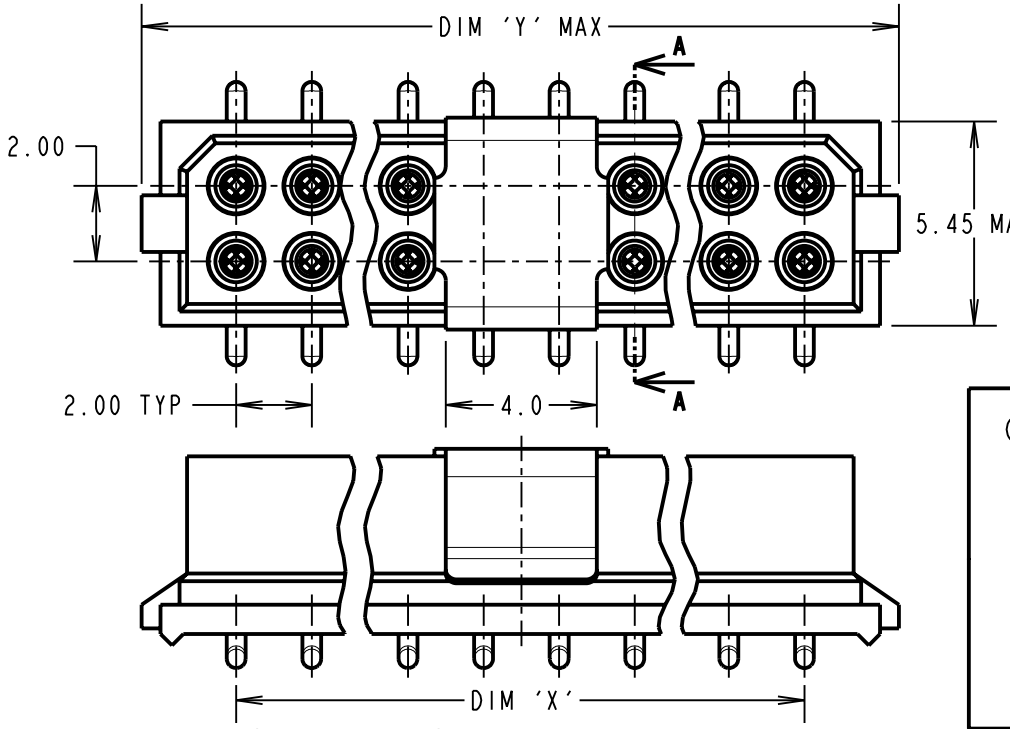

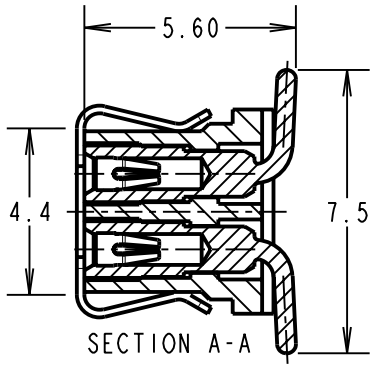

SPECIFICATIONS:
- MATERIAL:
  - MOULDING = GLASS-FILLED POLYAMIDE 46, UL94V-0, BLACK
  - CONTACT CLIP = BERYLLIUM COPPER
  - CONTACT SHELL = BRASS
  - PICK & PLACE CAP = PHOSPHOR BRONZE
- FINISH:
  - 01 = 0.3µ GOLD CLIP, 4µ TIN/LEAD SHELL
  - 42 = 0.3µ GOLD CLIP, 4µ 100% TIN SHELL
  - 45 = 0.3µ GOLD CLIP, 0.3µ GOLD SHELL
- ELECTRICAL:
  - CURRENT RATING AT 25°C = 3.0A MAX
  - CURRENT RATING AT 85°C = 2.2A MAX
  - WORKING VOLTAGE = 120V AC/DC
  - VOLTAGE PROOF = 360V AC/DC
  - CONTACT RESISTANCE = 25 mΩ MAX
  - INSULATION RESISTANCE = 100 MΩ MIN
- MECHANICAL:
  - DURABILITY = 500 OPERATIONS
  - INSERTION FORCE = 2.8N MAX, 1.0N MIN
  - WITHDRAWAL FORCE = 1.8N MAX, 0.2N MIN
- ENVIRONMENTAL:
  - TEMPERATURE RANGE = -55°C TO +125°C
- PACKING: TUBE

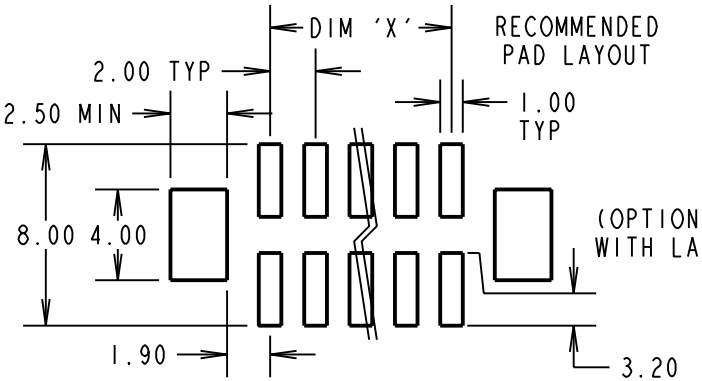

NOTES:
1. FOR CONNECTOR WITHOUT PICK AND PLACE PAD, SEE DRAWING M80-681XXXX.

(OPTIONAL) HOLES REQUIRED FOR USE WITH LATCHED MALE CONNECTORS

ORDER CODE:

M80-681XXXXP

TOTAL No. OF CONTACTS
04, 06, 08, 10, 12, 14, 16, 18, 20, 26, 34, 44

FINISH
- 01 - GOLD CLIP, TIN/LEAD SHELL
- 42 - GOLD CLIP, 100% TIN SHELL
- 45 - GOLD CLIP, GOLD SHELL

RA	2	01.10.09	10502
NAME	ISS.	DATE	C/NOTE

APPROVED: R.ADDE
CHECKED: M.G.PLESTED
DRAWN: W. J. BOURNE
CUSTOMER REF.:
ASSEMBLY DRG:

HARWIN

HARWIN USA
TEL: 603 893 5376
FAX: 603 893 5396
mis@harwin.com

HARWIN Europe (UK)
TEL: 023 9231 4545
FAX: 023 9231 4590
mis@harwin.co.uk

HARWIN Asia
TEL: +65 6 779 4909
FAX: +65 6 779 3868
mis@harwin.com.sg

THIS DRAWING AND ANY INFORMATION OR DESCRIPTIVE MATTER SET OUT HEREON ARE CONFIDENTIAL AND COPYRIGHT PROPERTY OF THE HARWIN GROUP AND MUST NOT BE DISCLOSED, LOANED, COPIED OR USED FOR MANUFACTURING, TENDERING OR FOR ANY OTHER PURPOSE WITHOUT THEIR WRITTEN PERMISSION.

TOLERANCES
X. = ±1mm
X.X = ±0.25mm
X.XX = ±0.10mm
X.XXX = ±0.01mm
ANGLES = ±5°
UNLESS STATED

MATERIAL: SEE ABOVE
FINISH: SEE ABOVE
S/AREA: mm²

TITLE: DATAMATE DIL VERTICAL SMT SOCKET ASSEMBLY (WITH PICK & PLACE CAP)

DRAWING NUMBER: M80-681XXXXP

SHT 2 OF 2