Customer Information Sheet

DRAWING No.: M80-540XXXX	SHEET 2 OF 2	IF IN DOUBT - ASK	©	NOT TO SCALE	THIRD ANGLE PROJECTION	ALL DIMENSIONS IN mm

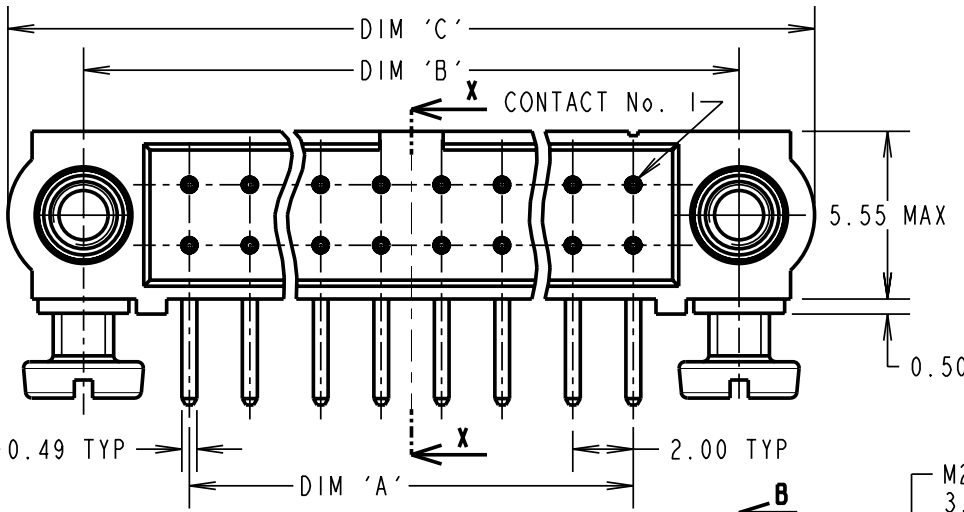

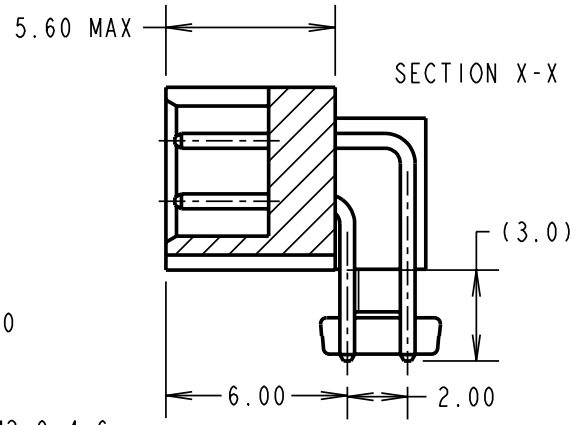

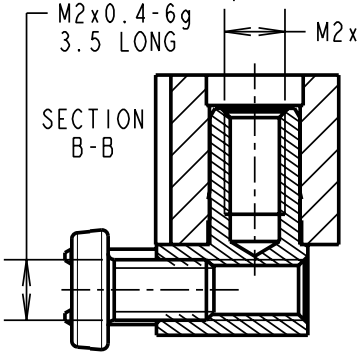

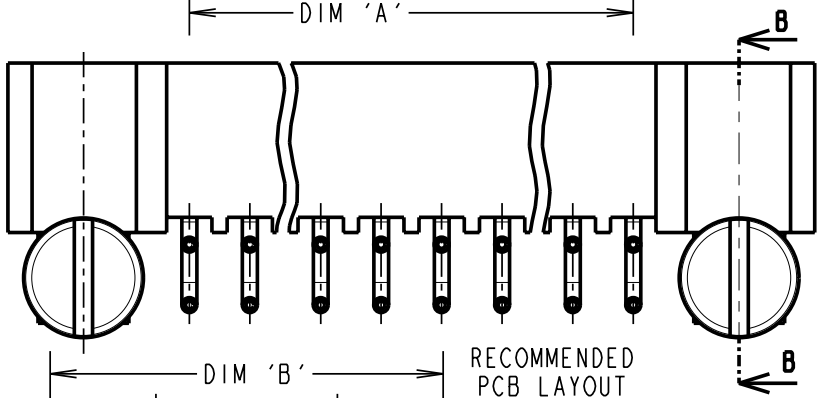

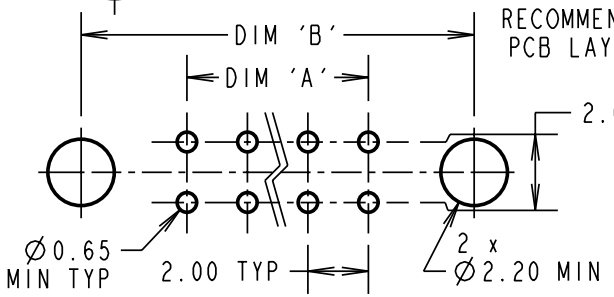

DIMENSION	CALCULATION
DIM 'A'	TOTAL No. OF CONTACTS - 2
DIM 'B'	TOTAL No. OF CONTACTS + 5
DIM 'C'	TOTAL No. OF CONTACTS + 10

SPECIFICATIONS:
MATERIAL:
MOULDING = GLASS-FILLED PPS, UL94V-0, BLACK
CONTACT = PHOSPHOR BRONZE
JACKSCREW = STAINLESS STEEL
FINISH (CONTACTS):
22 = 0.75µ GOLD ON CONTACT AREA, 3µ 90/10 TIN/LEAD ON TAILS
42 = 0.75µ GOLD ON CONTACT AREA, 3µ 100% TIN ON TAILS
05 = 0.75µ ALL OVER GOLD
ELECTRICAL:
CURRENT RATING AT 25°C = 3.0A MAX
CURRENT RATING AT 85°C = 2.2A MAX
WORKING VOLTAGE = 120V AC/DC
VOLTAGE PROOF = 360V AC/DC
CONTACT RESISTANCE = 25 mΩ MAX
INSULATION RESISTANCE = 100 MΩ MIN
MECHANICAL:
DURABILITY = 500 OPERATIONS
ENVIRONMENTAL:
TEMPERATURE RANGE = -55°C TO +125°C
PACKING: TUBE
FOR COMPLETE SPECIFICATION, SEE COMPONENT SPECIFICATION C005XX (LATEST ISSUE)

ORDER CODE: **M80-540XXXX**

TOTAL No. OF CONTACTS
04 TO 50
(EVEN NUMBERS ONLY)

FINISH
22 - SELECTIVE GOLD + TIN/LEAD
42 - SELECTIVE GOLD + 100% TIN
05 - 0.75µ GOLD ALL OVER

RA	G	06.06.08	10050
NAME	ISS.	DATE	C/NOTE

APPROVED: R.ADDE
CHECKED: M.G.PLESTED
DRAWN: W. J. BOURNE
CUSTOMER REF.:
ASSEMBLY DRG:

HARWIN

HARWIN USA
TEL: 603 893 5376
FAX: 603 893 5396
mis@harwin.com

HARWIN Europe (UK)
TEL: 023 9231 4545
FAX: 023 9231 4590
mis@harwin.co.uk

HARWIN Asia
TEL: +65 6 779 4909
FAX: +65 6 779 3868
mis@harwin.com.sg

THIS DRAWING AND ANY INFORMATION OR DESCRIPTIVE MATTER SET OUT HEREON ARE CONFIDENTIAL AND COPYRIGHT PROPERTY OF THE HARWIN GROUP AND MUST NOT BE DISCLOSED, LOANED, COPIED OR USED FOR MANUFACTURING, TENDERING OR FOR ANY OTHER PURPOSE WITHOUT THEIR WRITTEN PERMISSION.

TOLERANCES
X. = ±1mm
X.X = ±0.25mm
X.XX = ±0.10mm
X.XXX = ±0.01mm
ANGLES = ±5°
UNLESS STATED

MATERIAL: SEE ABOVE
FINISH: SEE ABOVE
S/AREA: mm²

TITLE: JACKSCREW DATAMATE DIL HORIZONTAL PC TAIL MALE ASSEMBLY (BOARD MOUNT)

DRAWING NUMBER: **M80-540XXXX**

SHT 2 OF 2