Customer Information Sheet

DRAWING No.: M80-462XXXX	SHEET 2 OF 2	IF IN DOUBT - ASK	©	NOT TO SCALE	THIRD ANGLE PROJECTION	ALL DIMENSIONS IN mm

SPECIFICATIONS:
MATERIAL:
MOULDING = GLASS-FILLED PPS, UL94V-0, BLACK
CONTACT CLIP = BERYLLIUM COPPER
CONTACT SHELL = BRASS
JACKSCREW, NUT = STAINLESS STEEL
FINISH:
05 = 0.3µ GOLD CLIP, 0.25-0.3µ GOLD SHELL
42 = 0.3µ GOLD CLIP, 3.5-5.0µ 100% TIN OVER NICKEL
ELECTRICAL:
CURRENT RATING AT 25°C = 3.0A MAX
CURRENT RATING AT 85°C = 2.2A MAX
WORKING VOLTAGE = 120V AC/DC
VOLTAGE PROOF = 360V AC/DC
CONTACT RESISTANCE = 25 mΩ MAX
INSULATION RESISTANCE = 100 MΩ MIN
MECHANICAL:
DURABILITY = 500 OPERATIONS
INSERTION FORCE (Ø0.5mm GAUGE) = 2.8N MAX
WITHDRAWAL FORCE (Ø0.5mm GAUGE) = 0.2N MIN
ENVIRONMENTAL:
TEMPERATURE RANGE = -55°C TO +125°C
PACKING:
LOOSE
FOR COMPLETE SPECIFICATION, SEE COMPONENT SPECIFICATION C005XX (LATEST ISSUE)

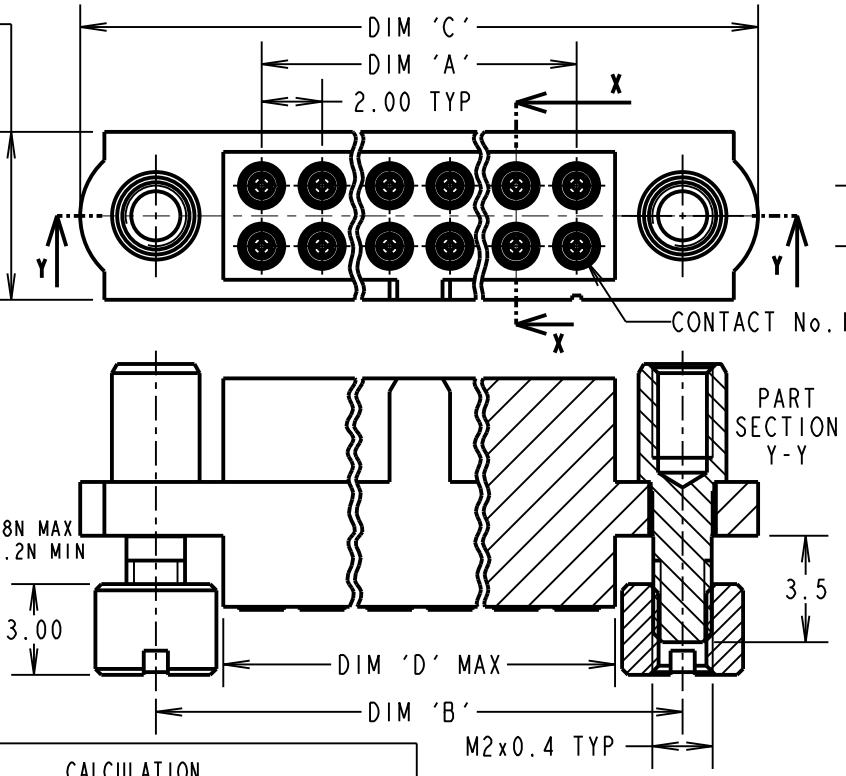

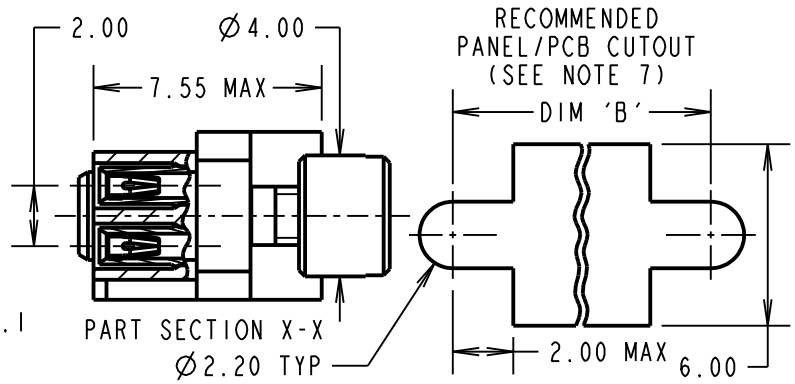

NOTES:
1. CONNECTORS ARE SUPPLIED WITH CONTACTS LOOSE.
2. FOR EXTRA CONTACTS, USE PART NUMBER M80-0110005 FOR M80-462XX05 AND M80-0110001 FOR M80-462XX42.
3. RECOMMENDED WIRE TYPE = BS 3G 210 TYPE A, PTFE INSULATED 22 AWG. MAX INSULATION DIAMETER = Ø1.10mm, STRIP WIRE BY 2.00mm.
4. RECOMMENDED HAND CRIMP TOOL = M22520/2-01 WITH POSITIONER T5747. REFER TO TOOLING INSTRUCTION SHEET IS-01 FOR COMPLETE CRIMPING INSTRUCTIONS.
5. CONTACT INSERTION AND EXTRACTION TOOL = Z80-280. REFER TO TOOLING INSTRUCTION SHEET IS-25 FOR ASSEMBLY INSTRUCTIONS.
7. RECOMMENDED PANEL/PCB THICKNESS = 1.3-1.6mm.

DIMENSION	CALCULATION
DIM 'A'	TOTAL No. OF CONTACTS - 2
DIM 'B'	TOTAL No. OF CONTACTS + 5
DIM 'C'	TOTAL No. OF CONTACTS + 10
DIM 'D'	TOTAL No. OF CONTACTS + 0.64

EXAMPLE: CONNECTOR WITH 20 CONTACTS, GOLD CLIP AND 100% TIN OVER NICKEL SHELL, M80-4622042

DIM 'A' = 18.00mm, DIM 'B' = 25.00mm,
DIM 'C' = 30.00mm, DIM 'D' = 20.64mm

ORDER CODE:
M80-462XXXX

TOTAL No. OF CONTACTS
04 - 50
(EVEN NUMBERS ONLY)

FINISH CODE
05 - GOLD CLIP, GOLD SHELL
42 - GOLD CLIP, 100% TIN OVER NICKEL SHELL

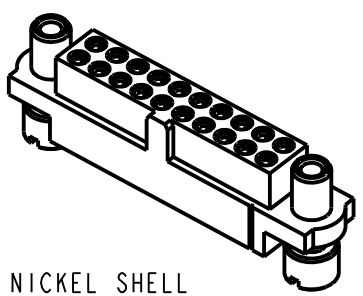

SM	3	28.10.11	11520
NAME	ISS.	DATE	C/NOTE

APPROVED: S. MCCULLAGH
CHECKED: M. G. PLESTED
DRAWN: B. M. KENT
CUSTOMER REF.:
ASSEMBLY DRG:

HARWIN
www.harwin.com
technical@harwin.com

THIS DRAWING AND ANY INFORMATION OR DESCRIPTIVE MATTER SET OUT HEREON ARE CONFIDENTIAL AND COPYRIGHT PROPERTY OF THE HARWIN GROUP AND MUST NOT BE DISCLOSED, LOANED, COPIED OR USED FOR MANUFACTURING, TENDERING OR FOR ANY OTHER PURPOSE WITHOUT THEIR WRITTEN PERMISSION.

TOLERANCES
X. = ±1mm
X.X = ±0.25mm
X.XX = ±0.10mm
X.XXX = ±0.01mm
ANGLES = ±5°
UNLESS STATED

MATERIAL: SEE ABOVE
FINISH: SEE ABOVE
S/AREA: mm²

TITLE: DATAMATE J-TEK
FEMALE DIL LARGE BORE CRIMP WITH 'REVERSE FIX' JACKSCREW AND 3.5mm BOARD/PANEL MOUNT

DRAWING NUMBER: M80-462XXXX

SHT 2 OF 2