M66512P/FP

LASER-DIODE DRIVER

DESCRIPTION

The M66512 is a semiconductor laser-diode driver for driving a specific type* of semiconductor laser, in which the anode of a semiconductor laser diode is connected in stem structure to the cathode of a monitoring photodiode.
The amplitude of laser drive current is set by applying a voltage from an external source. the M66512 is capable of driving laser diodes on a maximum current of 120 mA.
It operates on a 5-V single power supply and switches laser drive current at a rate of 40 Mbit/s.
*: The N type of Mitsubishi's semiconductor lasers.

FEATURES

- Two kinds of outputs for monitoring laser power built in. (comparator output and analog output)
- Pin provided for forced OFF of current circuit.
- High speed switching (40 Mbit/s)
- Large drive current (120mA max.)
- 5V single power supply

APPLICATION

Laser beam printers

PIN CONFIGURATION (TOP VIEW)

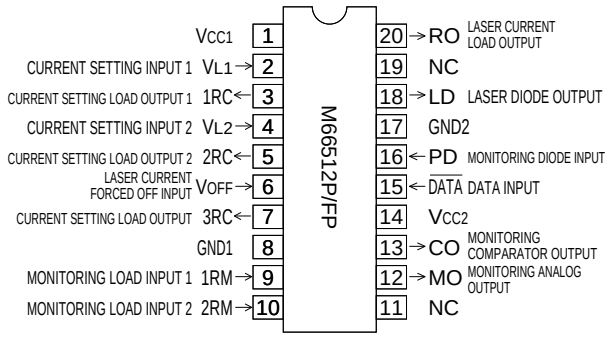

Outline 20P4
20P2N-A

NC: No Connection

BLOCK DIAGRAM

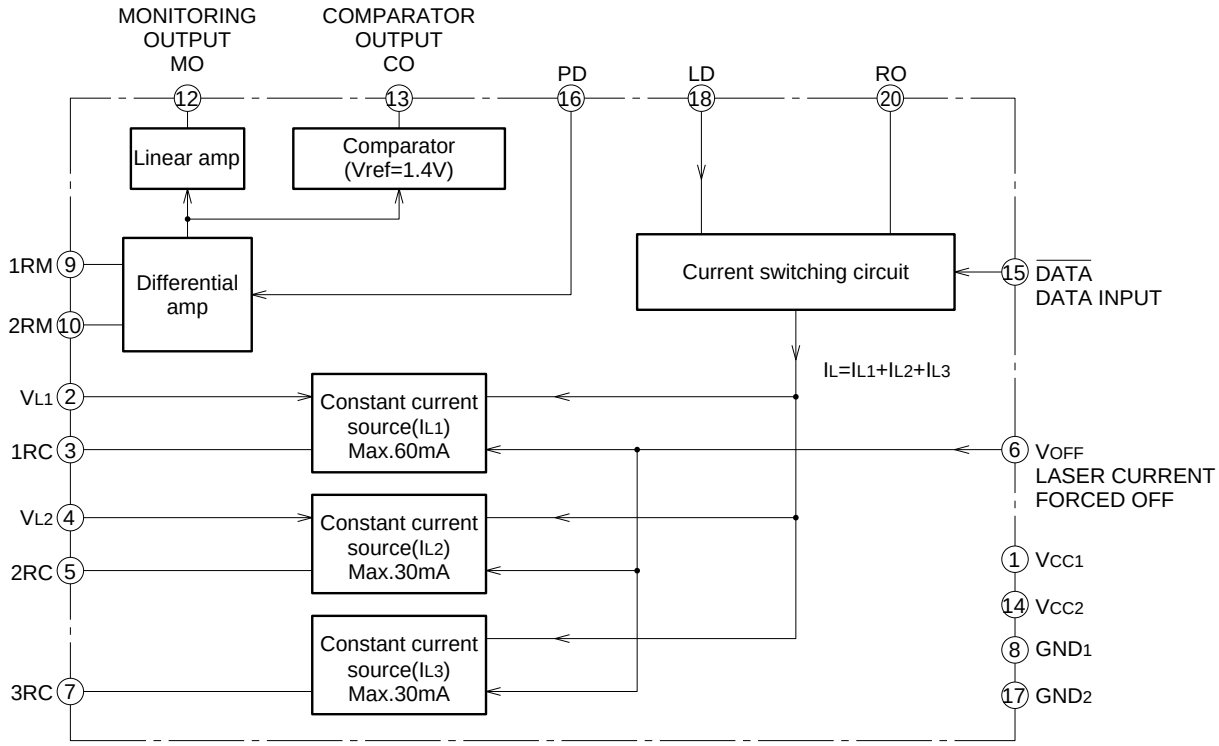

VL1, 1RC : Laser current (IL1) setting pin
VL2, 2RC : Laser current (IL2) setting pin
3RC : Laser current (IL3) setting pin

VCC1, GND1 : Power supply pin for analog circuits in IC
VCC2, GND2 : Power supply pin for digital circuits in IC

FUNCTION

The M66512 is a semiconductor laser-diode driver for driving a specific type (Mitsubishi's N type) of laser, in which the anode of a semiconductor laser diode is connected in stem structure to the cathode of a monitoring photodiode.
The amplitude of laser drive current is set by applying a constant voltage from an external source. For that purpose, the M66512 has two voltage applying pins, which they are independent each other, This mechanism makes it possible to set a drive current with great accuracy.

As the IC is equipped with a pin to provide a forced OFF of current circuit, it is possible to prevent a large current flowing through laser diodes at the moment of power ON.
Regarding the detection of laser power, a monitor current generated by a monitoring photodiode, which is incorporated in laser unit, is drawn and converted into changes in voltage by means of an external resistor, in order to output as an analog signal. Simultaneously, the converted voltage is compared with the internal reference voltage, thence the result is output in TTL level as logic information.

PIN DESCRIPTIONS

Pin	Name	Functions
LD	Laser connection pin	Connect to cathode on semiconductor laser diode.
PD	Monitoring diode connection pin	Connect to cathode on monitoring photodiode.
V_{L1}	Voltage input pin for I_{L1} setting	Voltage input to set output current (I_{L1}) of current source 1.
1RC	Load resistor connection pin for I_{L1} setting	Connect load resistor between this pin and GND for I_{L1} setting.
V_{L2}	Voltage input pin for I_{L2} setting	Voltage input to set output current (I_{L2}) of current source 2.
2RC	Load resistor connection pin for I_{L2} setting	Connect load resistor between this pin and GND for I_{L2} setting.
3RC	Load resistor connection pin for I_{L3} setting	Connect load resistor between this pin and GND for I_{L3} setting. Leave this pin open if I_{L3} is not used.
$\overline{DATA}$	Switching data input pin	Laser turns on and off by "L" and "H", respectively.
1RM, 2RM	Load resistor connection pins for monitoring function	Connect resistor between pins 1RM and 2RM for conversion of current generated by monitoring photodiode into changes in voltage.
MO	Analog output pin for monitoring function	Analog output for monitoring laser power
CO	Comparator output pin for monitoring function	Comparator output for monitoring laser power
V_{OFF}	Laser current forced OFF input pin	If this is "L", all current supply circuits are turned off.
RO	Load resistor connection pin for laser current	Connect load resistor between RO and V_{CC} for laser current.
V_{CC1}	Power supply pin 1	Power supply for internal analog circuits. Connect to positive power source (+5V)
V_{CC2}	Power supply pin 2	Power supply for internal digital circuits. Connect to positive power source (+5V)
GND1	GND pin 1	GND for internal analog circuits
GND2	GND pin 2	GND for internal digital circuits

OPERATION

1. Setting for Laser Drive Current

The M66512 has 3 built-in constant current sources, I_{L1}, I_{L2}, and I_{L3}. Each output current can be controlled independently. The following (1) to (3) describe the method for how to set I_{L1},I_{L2}, and I_{L3}.

(1) I_{L1} setting method

The value of I_{L1} is determined by the voltage on the V_{L1} pin and the resistor (RC1) connected between the 1RC pin and GND. The following equation is used for approximation.

$$I_{L1}\,[mA] = 12 \times \frac{V_{L1}[V]}{RC1\,[k\Omega]}$$

provided that $0 \leq V_{L1} \leq V_{CC}-1.8V$ and $I_{L1(max.)} = 60mA$

(2) I_{L2} setting method

The value of I_{L2} is determined by the voltage on the V_{L2} pin and the resistor (RC2) connected between the 2RC pin and GND. The following equation is used for approximation.

$$I_{L2}[mA] = 6 \times \frac{V_{L2}[V]}{RC2\,[k\Omega]}$$

provided that $0 \leq V_{L2} \leq V_{CC}-1.8V$ and $I_{L2(max.)} = 30mA$

(3) I_{L3} setting method

The value of I_{L3} is determined by the internal reference voltage (V_{ref}) and the resistor (RC3) connected between the 3RC pin and GND. The following equation is used for approximation.

$$I_{L3}[mA] = 10 \times \frac{V_{ref}[V]}{RC3\,[k\Omega]}$$

provided that $V_{ref} = 1.4V$ (typ.) and $I_{L3(max.)} = 30mA$

Note: Each of the above equations is a typical on for obtaining I_{L1}–I_{L3}. In practice values vary by a few percent due to some reasons such as differences of ICs from lot to lot and variations in operation temperatures.

2. Switching Operation

The laser turns on if $\overline{DATA}$ ="L". The laser drive current at that moment is I_{L1} +I_{L2} + I_{L3}.

If $\overline{DATA}$ = "H" the laser is turned off, and the laser drive current is almost zero irrespective of the values of I_{L1} to I_{L3}.

3. Use of the V_{OFF} Input

When $\overline{DATA}$ = "H" the current flowing through the laser is zero so the laser is turned off, but the internal current sources are in operation.

When V_{OFF} = "L" in contrast, the internal current sources are turned off. Accordingly, it is possible to prevent an excessive current from flowing through the laser by, for example, fixing the V_{OFF} input to "L" until V_{CC}, after turned on, reaches 3.5V(typ.). (See the section dealing with internal reset.)

4. Laser Power Monitoring Operation

At the MO and CO pins, the M66512 outputs data obtained by the monitoring photodiode (PD) contained in the laser, in the sequence explained below.

(1) A current equal to the PD current generated by laser light flows through the resistor (RM) connected between 1RM and 2RM. Then, a potential difference (V_M) proportional to the output of laser light occurs at RM.

(2) The V_M is output at the MO pin as an analog signal through a buffer amp. At the same time, V_M is compared with the internal reference voltage V_{ref}(1.4V typ.) by the comparator, thence the result of the comparison is output at the CO pin in TTL level.

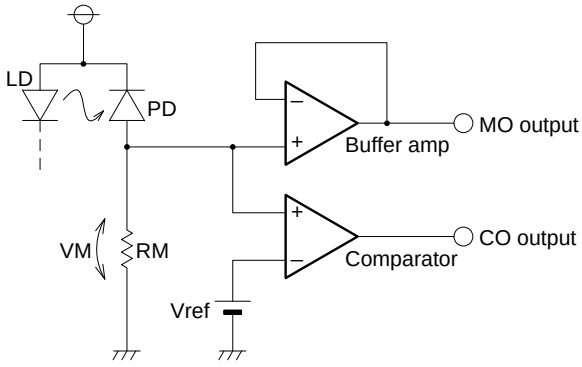

Condition	CO output
$V_M < V_{ref}$	"L"
$V_M > V_{ref}$	"H"

A Schematic Diagram of Monitor Circuits

5. RO Pin

The RO pin is used to connect a load resistor (RO) for the current sources (I_{L1}, I_{L2}, and I_{L3}). The load resistor is connected between the RO pin and V_{CC} in order to reduce the power dissipated in the IC.

The resistance of the load resistor should be such that does not generate a voltage equal to or lower than 2.5V at the RO pin. Accordingly, a value that satisfies the following equation should be chosen.

$$RO\ (\Omega) \leq \frac{V_{CC}-2.5[V]}{\text{maximum load current flowing through RO [A]}}$$

Example: If V_{CC} =5V and the maximum load current is 120 mA, RO is 20Ω or under.

6. Internal Reset Function

The M66512 has a reset circuit for the protection of laser from an excessive current flowing at the moment of power on. The reset circuit functions in the range V_{CC} < 3.5V(typ.), letting all current sources turn off.

7. V_{CC} and GND Pins

Pins related to the power supply function are V_{CC1}, V_{CC2}, GND1, and GND2. The role of these pins in terms of the internal circuits are as follows.

V_{CC1}, GND1 : connected to analog circuits
V_{CC2}, GND2 : connected to digital circuits

In practical wiring, the following should be noted.

(1) Secure as much a width as possible for conductors and avoid lengthy wiring.
(2) Allocate electrolytic capacitors for stable voltage near V_{CC1} and GND1.
(3) Allocate by-pass capacitors near V_{CC2} and GND2.

Notes on the Wiring for peripheral Components

Lay out peripheral components necessary for the M66512 to operate in closest possible proximity to the M66512.

Calculation Method for Power Dissipation

The M66512's approximated power dissipation, P, is determined by the following equation.

$$P=I_{CC} \times V_{CC} + I_{(RO)} \times V_{(RO)} + I_{(LD)} \times V_{(LD)} + I_{OL(CO)} \times V_{OL(CO)}$$

Where $V_{(RO)}$: voltage at RO pin
$V_{(LD)}$: voltage at LD pin
$I_{(RO)}$: load current at RO pin
$I_{(LD)}$: load current at LD pin
$V_{OL(CO)}$: "L" output voltage at CO pin
$I_{OL(CO)}$: "L" output voltage at CO pin

If, for example, V_{CC} = 5.25V, $V_{(RO)}$ = $V_{(LD)}$ = 2.75V, $I_{(RO)}$ = $I_{(LD)}$ = 120mA, $I_{OL(CO)}$ = 8mA, and $V_{OL(CO)}$ = 0.5V, power dissipation at times of turning on and off of laser will be as follows.

(1) Laser ON ($\overline{DATA}$ ="L" and I_{CC} = 75mA)
$P_{ON} = 75 \times 5.25 + 0 + 120 \times 2.75 + 8 \times 0.5 = 727.8$(mW)
(2) Laser OFF ($\overline{DATA}$ ="H" and I_{CC} = 74mA)
$P_{OFF} = 74 \times 5.25 + 120 \times 2.75 + 0 = 718.5$(mW)

OPERATING WAVEFORMS

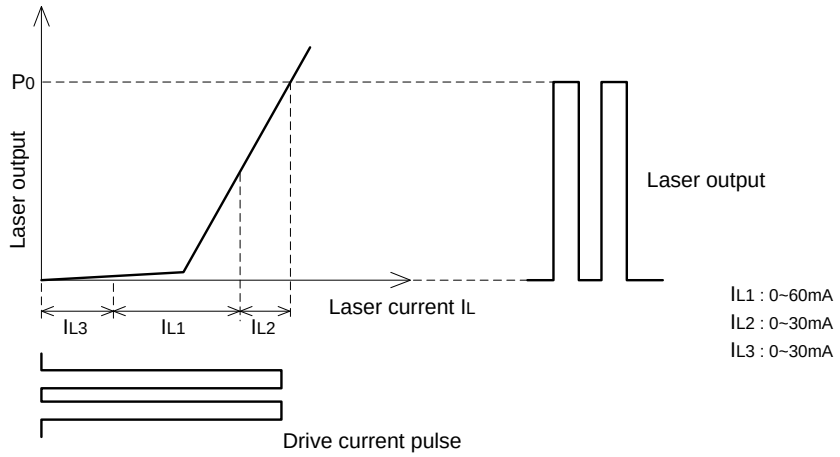

ABSOLUTE MAXIMUM RATINGS

Symbol	Parameter		Conditions	Ratings	Unit
V_{CC}	Supply voltage			–0.5 ~ +7.0	V
V_I	Input voltage	V_{L1}, V_{L2}		–0.3 ~ V_{CC}	V
		$\overline{DATA}$, V_{OFF}		–0.3 ~ + 7	
V_O	Output voltage	CO	Output: “H”	–0.3 ~ + 5.5	V
		RO		–0.3 ~ + 7	
I_{L1}	Output current 1			90	mA
I_{L2}	Output current 2			45	mA
I_{L3}	Output current 3			45	mA
P_d	Power dissipation	DIP	For single integrated circuit; Ta=25˚C (Note 1)	1300	mW
		SOP	IC Measured being mounted; Ta=25˚C (Note 2)	1200	
T_{stg}	Storage temperature			–65 ~ 150	°C

Note 1: For operation above 25°C free-air temperature, derating of 10.4mW/°C is necessary.
2: For operation above 25°C free-air temperature, derating of 9.6mW/°C is necessary.

RECOMMENDED OPERATIONAL CONDITIONS

Symbol	Parameter	Conditions	Limits			Unit
			Min.	Typ.	Max.	
V_{CC}	Supply voltage		4.75	5	5.25	V
I_{L1}	Output current 1				60	mA
I_{L2}	Output current 2				30	mA
I_{L3}	Output current 3				30	mA
T_{opr}	Operational ambient temperature		–20		75	˚C

ELECTRICAL CHARACTERISTICS (V_{CC} = 5V ± 5%, Ta = –20 ~ 75˚C unless otherwise noted))

Symbol	Parameter		Test conditions	Limits			Unit
				Min.	Typ.*	Max.	
V_{IH}	"H" input voltage	$\overline{DATA}$, V_{OFF}		2			V
V_{IL}	"L" input voltage	$\overline{DATA}$, V_{OFF}				0.8	V
V_I	Maximum effective input voltage	V_{L1}, V_{L2}		V_{CC}–1.8	V_{CC}–1.4		V
V_{OH}	"H" output voltage	CO	I_{OH}=–400µA	2.7			V
V_{OL}	"L" output voltage	CO	I_{OL}=4mA			0.4	V
			I_{OL}=8mA			0.5	
V_{LD}	Operating voltage range	LD		V_{CC}–2.5		V_{CC}	V
V_{OS}	Output offset voltage	MO	I_{MO}=±20µA, I_{PD}=0mA (Note 3)		30		mV
ΔV_M	Output voltage fluctuation	MO	I_{PD}=0.2~2.0mA, I_{MO}=±20µA RM=1kΩ (Note 4)		20		mV
		Temperature coefficient	RM=1kΩ, I_{PD}=1.2mA		0.05		mV/˚C
I_I	Input current	$\overline{DATA}$, V_{OFF}	V_I=2.7V			20	µA
			V_I=0.4V			–0.2	mA
		V_{L1}, V_{L2}	V_I=0~V_{CC}			±1	µA
V_{ref}	Reference voltage				1.4		V
		Temperature coefficient	Ta=–20~25˚C		–0.8		mV/˚C
			Ta=25~75˚C		–0.5		
I_{L1}	Output current 1 (Note 5)	LD	V_{L1}=3V, RC1=560Ω, V_{LD}=2V		61		mA
		Temperature coefficient			0.111		mA/˚C
I_{L2}	Output current 2 (Note 5)	LD	V_{L2}=3V, RC2=560Ω, V_{LD}=2V		31		mA
		Temperature coefficient			0.050		mA/˚C
I_{L3}	Output current 3 (Note 5)	LD	RC3=360Ω, V_{LD}=2V		34		mA
I_{OFF}	OFF state output current	LD	V_{OFF}=$\overline{DATA}$=2V		0.03	50	µA
			V_{OFF}=$\overline{DATA}$=0.8V		0.01	50	µA
I_{CC}	Supply current		V_{CC}=5.25V, V_{OFF}=4.5V, V_{L1}=V_{L2}=3.0V, RC1=RC2=560Ω, RC3=360Ω, RO=LD=5.0V, $\overline{DATA}$=0V		60	75	mA
			$\overline{DATA}$=4.5V		59	74	

Note 3. I_{MO}: Output current at MO pin. I_{PD}: Input current at PD pin
4. RM: Resistor connected between 1RM and 2RM pins
5. These parameters indicate the conversion characteristics of the input voltage and output current. In actual use, I_{L1} – I_{L3} shall be within the range specified as limits in the recommended operating conditions.

* Typical values are gained under conditions of V_{CC} =5V and Ta =25˚C. Regarding parameters that Ta is specified as test condition, however, typical values are gained under the condition V_{CC} = 5V.

SWITCHING CHARACTERISTICS (V_{CC} = 5V, Ta = –25˚C)

Symbol	Parameter	Test pin		Test conditions	Limits			Unit
		Input	Output		Min.	Typ.	Max.	
f_{OP}	Operating frequency					40		Mbps
t_{RP1}	Circuit response time 1	V_{L1}, V_{L2} Voltage	LD Current	$I_{LD(L)}$=0mA, $I_{LD(H)}$=60mA (Note 6)		4.5	7	µs
				$I_{LD(L)}$=55mA, $I_{LD(H)}$=65mA (Note 6)		0.5	2	
t_{RP2}	Circuit response time 2	PD Current	MO Voltage	$I_{PD(L)}$=0mA, $I_{PD(H)}$=2mA, RM=1kΩ (Note 7)		7	10	µs
				$\|\Delta I_{PD}\|$=0.2mA, RM=1kΩ (Note 7)		1	3	
t_{RP3}	Circuit response time 3	PD Current	CO Voltage	$\|\Delta I_{PD}\|$=1mA (Note 7)		7	10	µs
				$\|\Delta I_{PD}\|$=0.2mA (Note 7)		0.5	2	
t_{ON}	Circuit ON time	V_{OFF} Voltage	LD Current	$I_{LD(H)}$=60mA, $I_{LD(L)}$=0mA (Note 8)		3	5	µs
t_{OFF}	Circuit OFF time	V_{OFF} Voltage	LD Current	$I_{LD(H)}$=60mA, $I_{LD(L)}$=0mA (Note 8)		0.5	2	µs

NOTE 6: MEASURING CIRCUIT

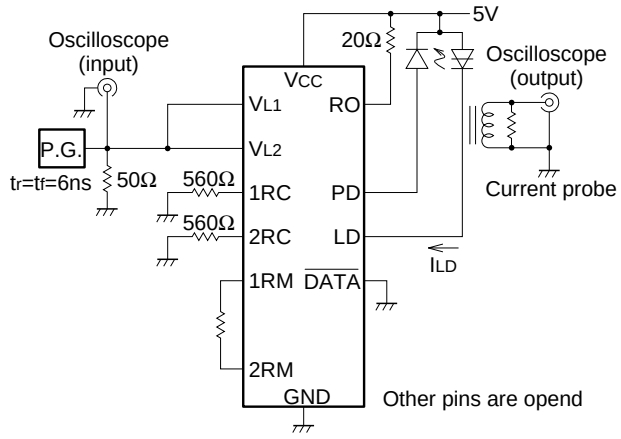

NOTE 7: MEASURING CIRCUIT

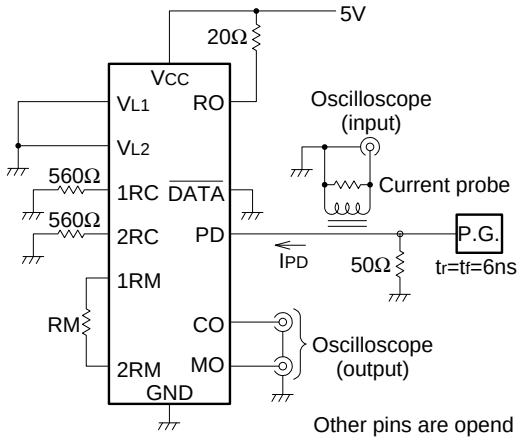

TIMING CHART

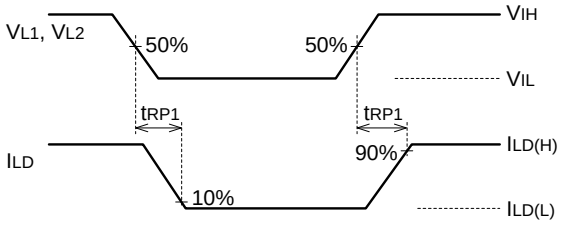

TIMING CHART

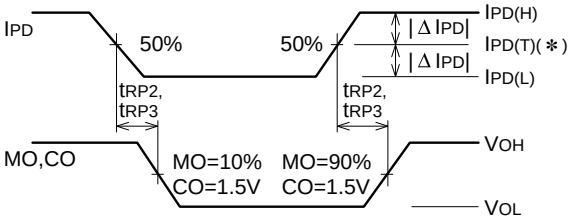

(∗): IPD gained at the moment CO output is inverted.

NOTE 8: MEASURING CIRCUIT

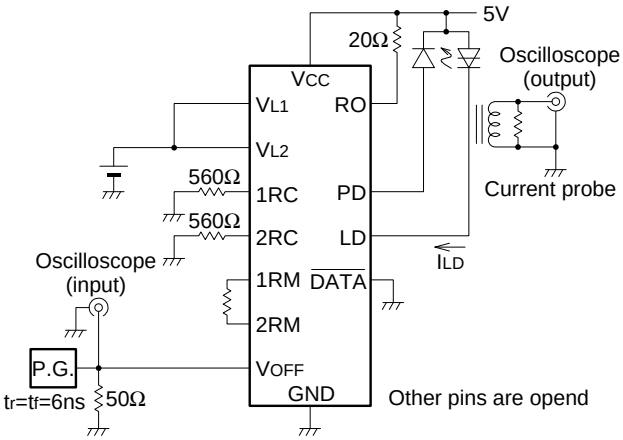

TIMING CHART

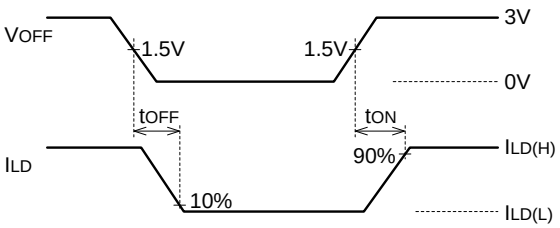

APPLICATION EXAMPLE

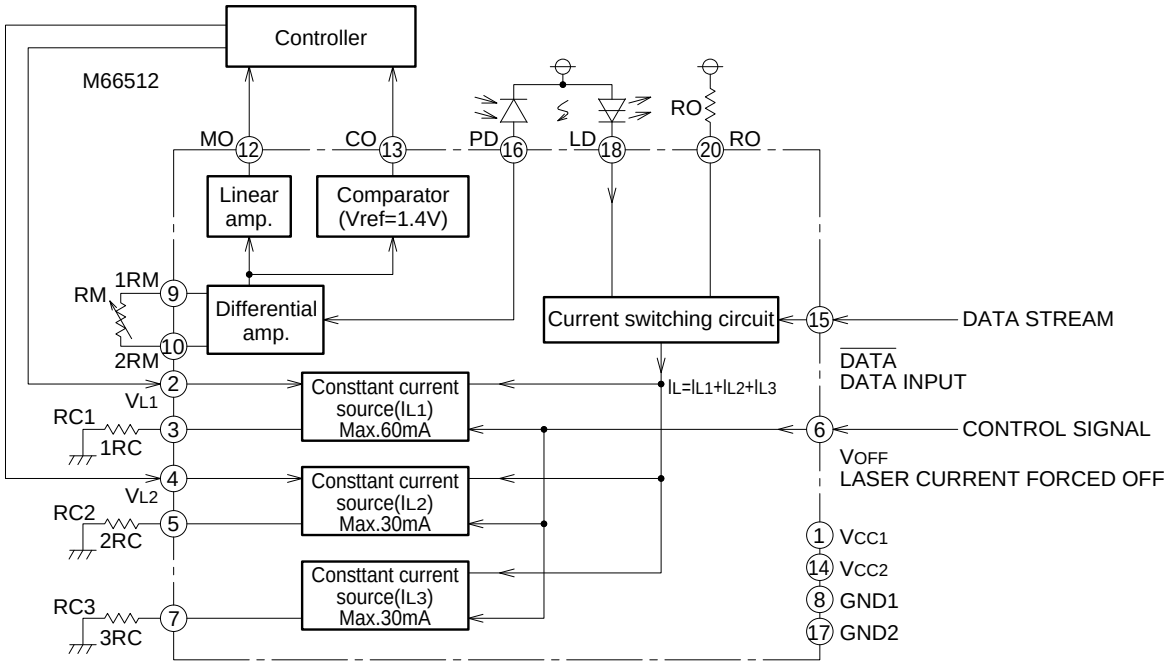

TYPICAL CHARACTERISTICS (V_{CC}=5V, Ta=25˚C)

LASER CURRENT VS. CURRENT SETTING VOLTAGE

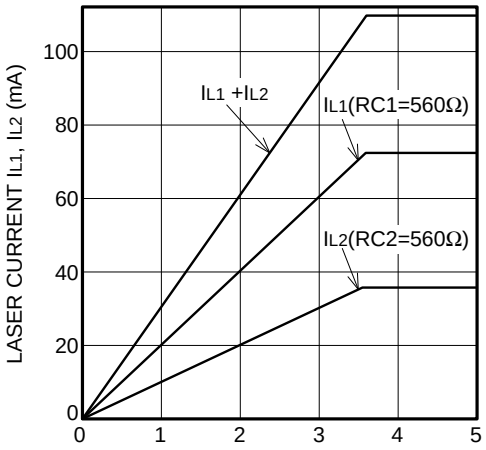

LASER CURRENT VS. RC3 RESISTANCE

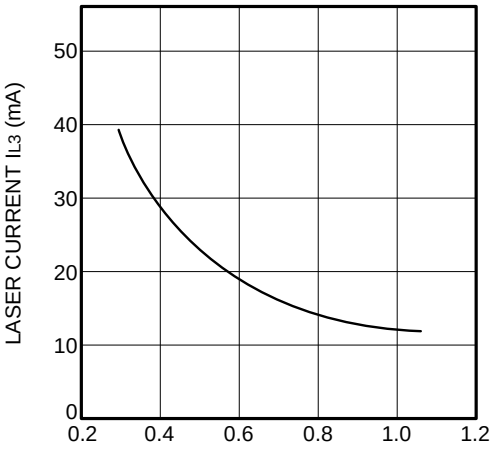

MO OUTPUT VS. MONITORING CURRENT

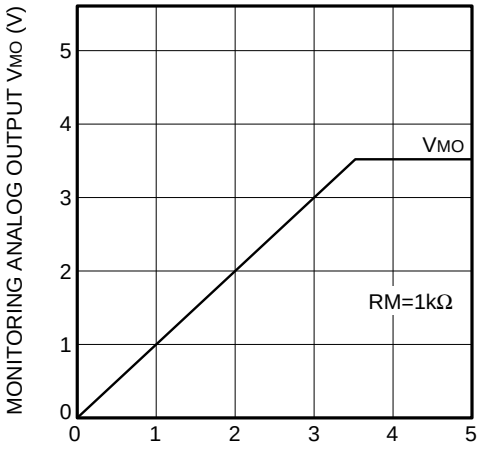

CO OUTPUT VS. MONITORING CURRENT

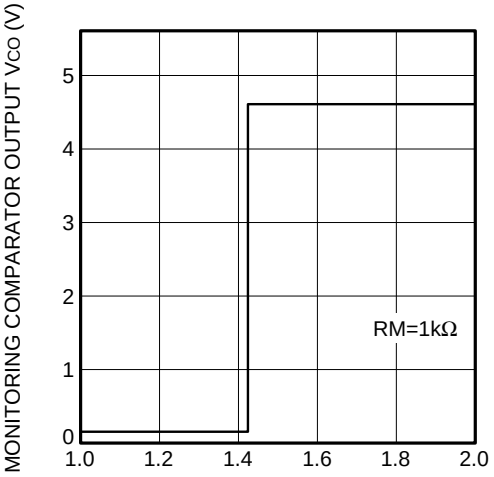

EVALUATION OF SWITCHING OPERATION WAVEFORMS

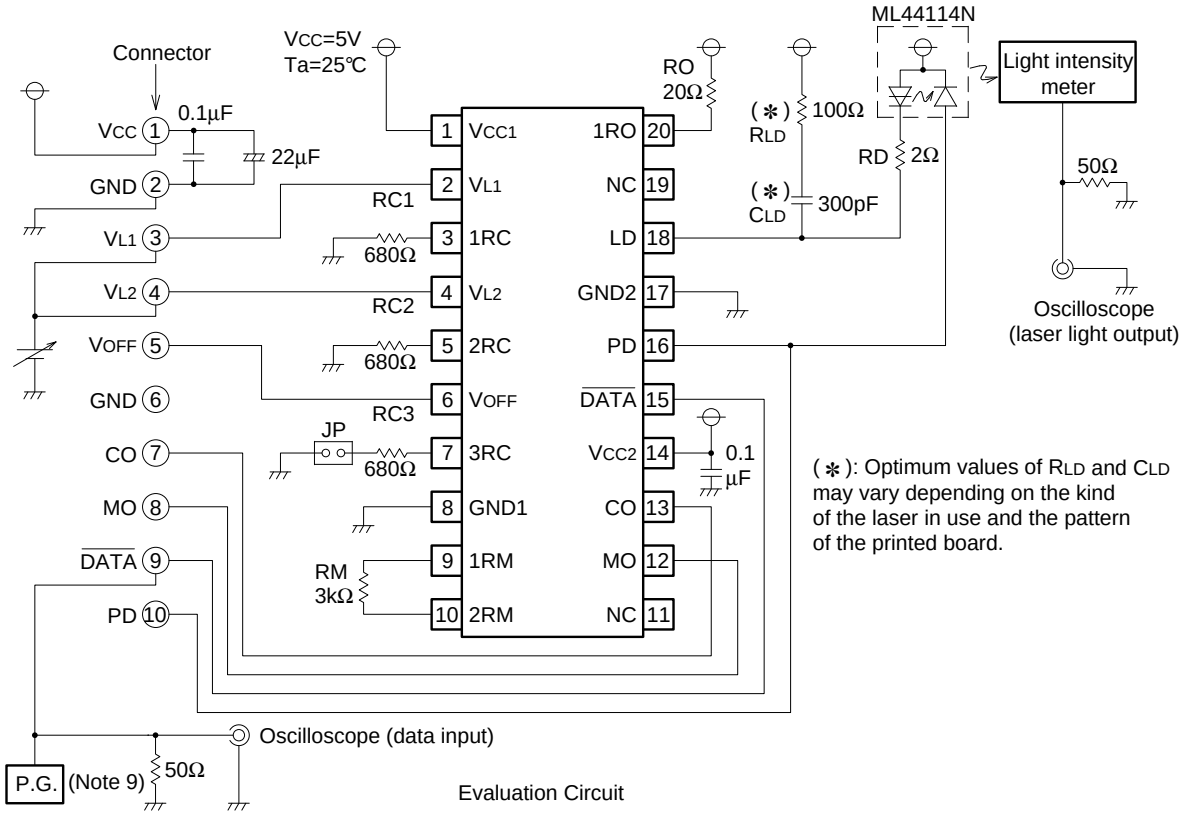

Note 9. t_r=t_f=6ns, V_O=3V_{P-P}, duty=50%

SWITCHING OPERATION WAVEFORMS

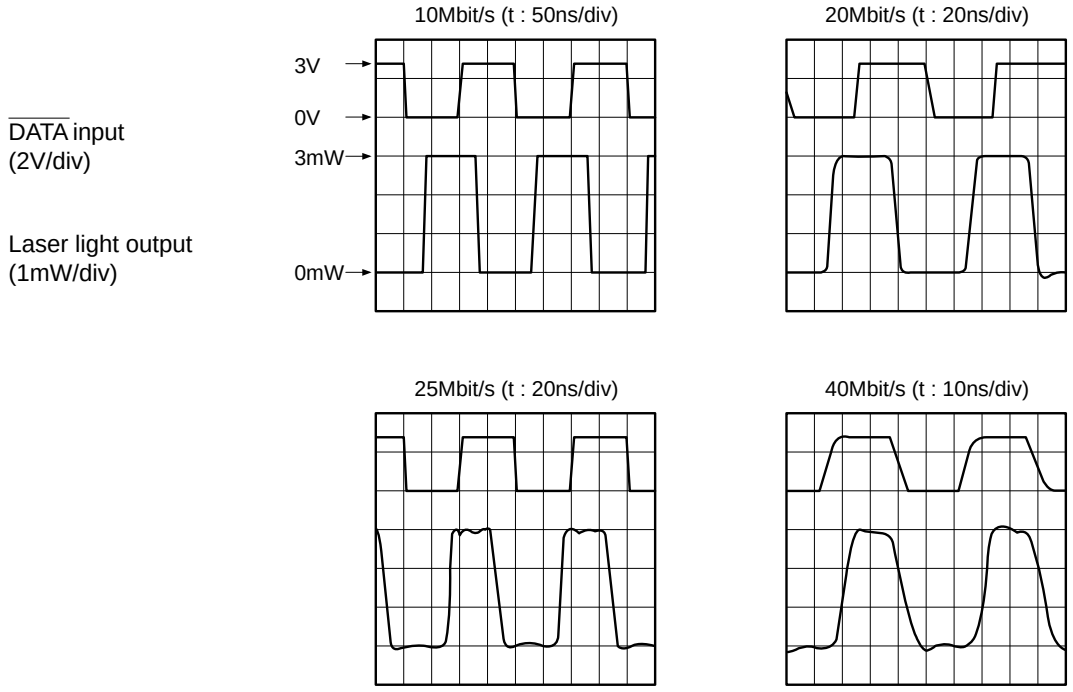

Note: The delay from the DATA input to the laser light output contains the delay occurring in measuring systems.