# M660-01

## Voltage Controlled SAW Oscillator

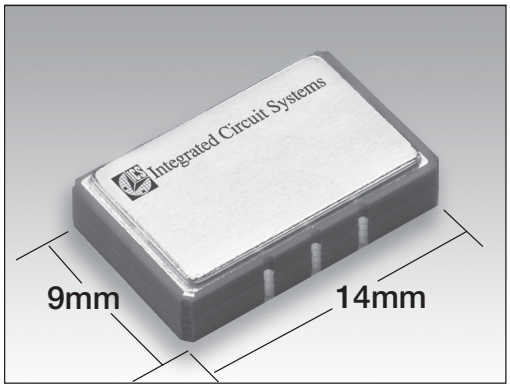


## DESCRIPTION

The M660-01 is a dual output (selectable output) SAW based voltage controlled oscillator for telecom applications. An internal SAW provides jitter performance of less than 0.5psec (rms) over an operating temperature of -40 to +85°C. The dual oscillator is housed in a hermetically sealed leadless package (LCC). Pin 2 is used as frequency select using TTL Logic.

## FEATURES

- **Frequency Select Feature (dual frequency capability)**
- **Industry Standard Package, 14 x 9 x 3.5 mm**
- **Output Frequencies from 125-175MHz**
- **3.3 V Operation**
- **Low Jitter < 1.5ps rms (50kHz to 80MHz offset range)**
- **LVPECL Logic Levels with Fast Transition Times**
- **Complementary Outputs**

## BLOCK DIAGRAM

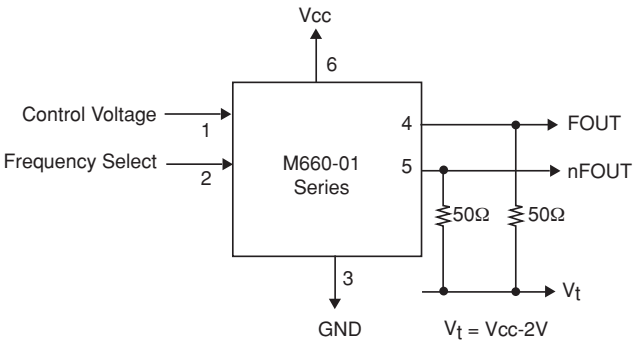


## APPLICATIONS

- **Clock Smoothing for OC192/OC48/ OC12/OC3**
- **Clock Smoothing for STS96/STS48/ STS12/STS3/STS1**
- **Frequency Translation**
- **Clock and Data Retiming**

## ABSOLUTE MAX RATINGS

| | |
|---|---|
| Operating Temp. Range (Case): | -40°C to +85°C |
| Storage Temp. Range (Ambient): | -55°C to +125°C |
| Control Voltage Range: | $V_{EE}$ to $V_{CC}$ |
| Output Current: | 20 mA |
| Power Supply Voltage (Vcc): | 0 to +3.6 Vdc |

**ISO 9001 Registered**

## SPECIFICATIONS

*Specifications @ Vcc = +3.3 Volts, Vee = 0 Volts, and Ta = +25°C unless otherwise specified*

| PARAMETER | | Min | Typ | Max | Units |
|---|---|---|---|---|---|
| Output Frequency | | 125 | | 175 | MHz |
| VCO Gain | KVCO | | 210 | | ppm/V |
| Absolute Pull Range | | ±50 | | | ppm |
| Duty Cycle | | 45 | | 55 | % |
| Spurious Suppression | | -50 | -70 | | dBc |
| Linearity[3] | | | 8 | | % |
| Logic Levels | Vol[1] | Vcc -2.0 | | Vcc -1.7 | Volts |
| | Voh[2] | Vcc -1.4 | | Vcc -1.0 | Volts |
| VOUT P-P | | | 700 | | mV |
| Input Control Voltage (Vc) Range | | 0 | | Vcc | Volts |
| Vc Input Impedance | | | 100 | | kΩ |
| Vc Modulation BW | | | 500 | | kHz |
| Frequency Select (Pin 2) | | 2.0 | | Vcc +0.3 | Volts |
| Frequency Select (Pin 2) | | -0.3 | | 0.8 | Volts |
| Output Rise Time[2] | | | 300 | 400 | psec |
| Output Fall Time[2] | | | 300 | 400 | psec |
| Jitter @ 155.520MHz offset from carrier | | | | | |
| 12kHz to 20MHz | | | 0.63 | | psec rms |
| Phase Noise (offset from carrier) | | | | | |
| | 100Hz | | -58 | | dBc/Hz |
| | 1kHz | | -85 | | dBc/Hz |
| | 10kHz | | -110 | | dBc/Hz |
| | 100kHz | | -134 | | dBc/Hz |
| Operating Temperature | | -40 | 25 | +85 | °C |
| Supply Current[4] | Icc | | 80 | 100 | mA |
| Supply Voltage | Vcc | 3.135 | 3.3 | 3.465 | V |

*Notes: 1. Output levels are standard 100K ECL compatible.*
*2. Transition times are measured from 20% to 80%.*
*3. Vin= 0.3V to 3.0V. Best fit straight line.*
*4. Includes 150Ω load resisters on both FOUT & nFOUT outputs.*
*5. Output terminated with 50Ω to Vcc -2.0V.*
*6. Internally pulled down to logic "0" (Frequency 1) if left unconnected.*

## PACKAGE DIMENSIONS

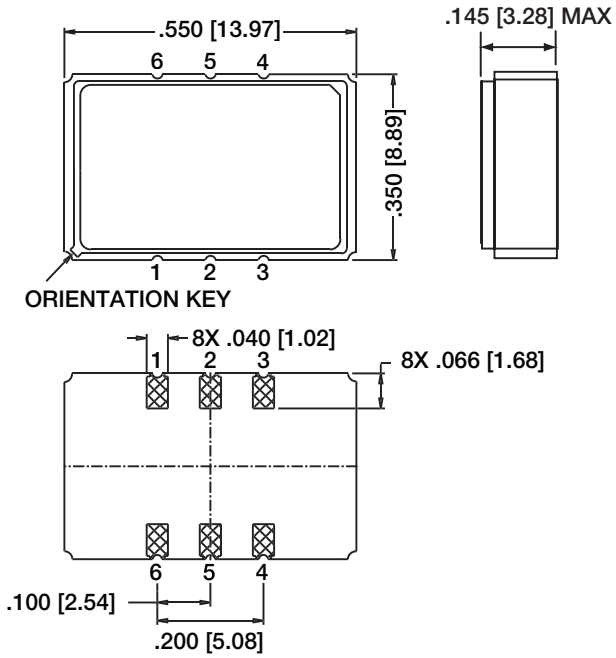


| Pin | Symbol | Function |
|---|---|---|
| 1 | Vc | VCSO Control Voltage |
| 2 | FS | Frequency Select<br>Frequency 1 = 0.0 to 0.5V<br>Frequency 2 = 2.5 to 3.0V |
| 3 | GND | Case and electrical ground |
| 4 | FOUT | VCSO Output |
| 5 | nFOUT | VCSO Complementary Output |
| 6 | Vcc | Power supply voltage (3.3V ±5%) |

*Dimensions are in MM, dimensions in [ ] are in inches*

*Tolerance is ±0.020 [0.001]*

## ORDERING INFORMATION

**Part Number** M660-01 –BA –BH

Frequency 1 in MHz 155.5200

Frequency 2 in MHz 167.3317

### Available VCSO Frequencies

| | | | |
|---|---|---|---|
| BA | 155.5200 | BG | 167.3280 |
| BB | 156.2500 | BH | 167.3317 |
| BC | 156.8324 | BI | 168.0400 |
| BD | 161.1328 | BJ | 172.6423 |
| BE | 166.6286 | BK | 173.3708 |
| BF | 167.2828 | | |

*ICS reserves the right to make changes in the device data identified in this publication without further notice. ICS advises its customers to obtain the latest version of all device data to verify that any information being relied upon by the customer is current and accurate.*

***Integrated Circuit Systems, Inc.***

***Communications Modules***

***324 Clark Street ■ Worcester, MA 01606 ■ tel: 508-852-5400 ■ fax: 508-852-8456***

***European Sales Headquarters ■ Hertogsingel 20 ■ 6214 AD Maastricht ■ The Netherlands ■ tel: +31-43-32-70912 ■ fax: +31-43-32-70715***

***www.icst.com/Comm-Module***