M62362P/FP

1280 RESOLUTION 3CH MULTIPLYING D-A CONVERTER

DESCRIPTION

The M62362P is an integrated circuit semiconductor of CMOS structure with 3 channels of built-in 1280 step resolution(equivalent 10.3-bit)multiplication type D-A converters.

hod and it is able to cascading serial use with Do terminal.

The device is suited for use in high accuracy automatic adjustment combination with microcomputer.

FEATURES

- Digital data transfer method
  3-wire serial data transfer method
- High resolution
  Resolution is more over 10-bit and error is less than ±1 LSB
- Capable of 4 quadrant multiplication
- Short setting time
- With reset terminal

DD=5V±10%

APPLICATION

Signal gain control of DISPLAY-MONITOR or CTV.
Conversion from digital control data to analog control data for home-use and industrial equipment.
Automatic adjustment by combination with EEPROM and microcomputer.(replacement of conventional half-fixed

PIN CONFIGURATION (TOP VIEW)

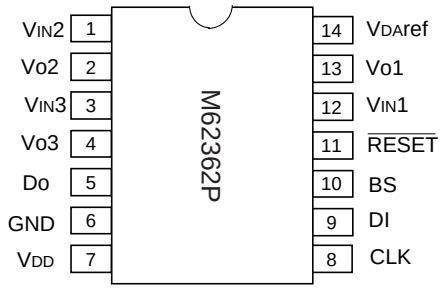

Outline 14P4

PIN CONFIGURATION (TOP VIEW)

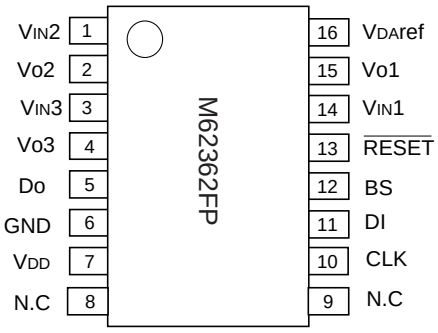

Outline 16P2N

BLOCK DIAGRAM

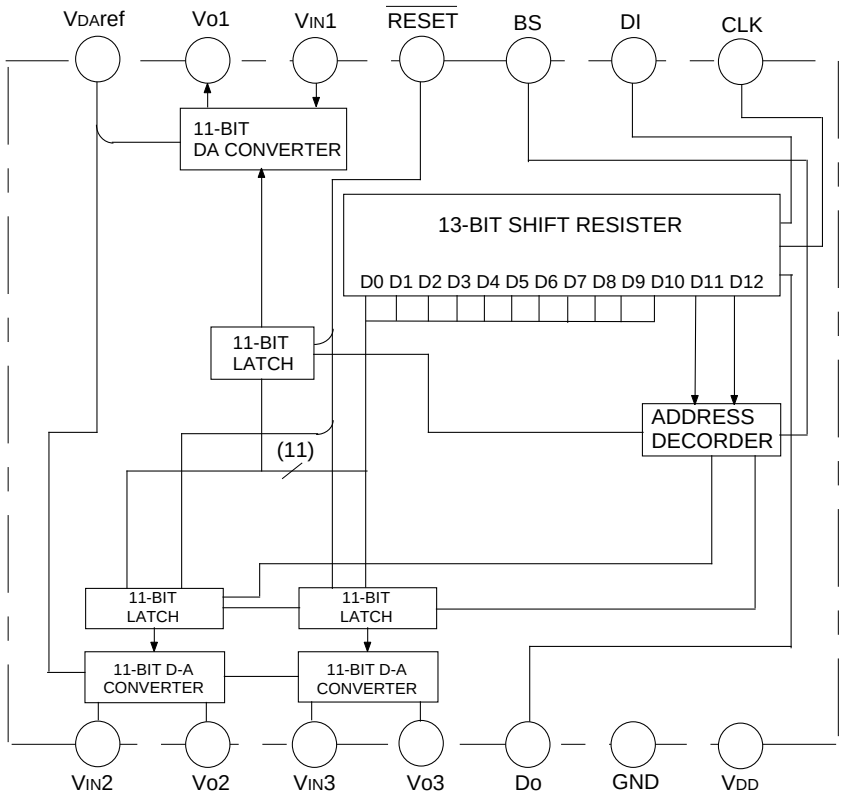

M62362P/FP

1280 RESOLUTION 3CH MULTIPLYING D-A CONVERTER

EXPLANATION OF TERMINALS

Pin No.	Symbol	Function
⑨ ⑪	DI	Serial data input terminal
⑤	Do	Serial data output terminal
⑧ ⑩	CLK	Serial clock input terminal
⑩ ⑫	BS	When BS terminal level is "H" latch circuit data is load
⑪ ⑬	$\overline{\text{RESET}}$	When $\overline{\text{RESET}}$ terminal level is "L",all D-A output terminal became "L"
⑬ ⑮	Vo1	1280 resolution D-A output
②	Vo2	
④	Vo3	
⑦	V_{DD}	Power supply terminal
⑥	GND	GND terminal
①	$V_{IN}2$	D-A converter input terminal
③	$V_{IN}3$	
⑫ ⑭	$V_{IN}1$	
⑭ ⑯	V_{DA}ref	D-A converter reference voltage input terminal

BLOCK DIAGRAM FOR EXPLANATION OF TERMINALS

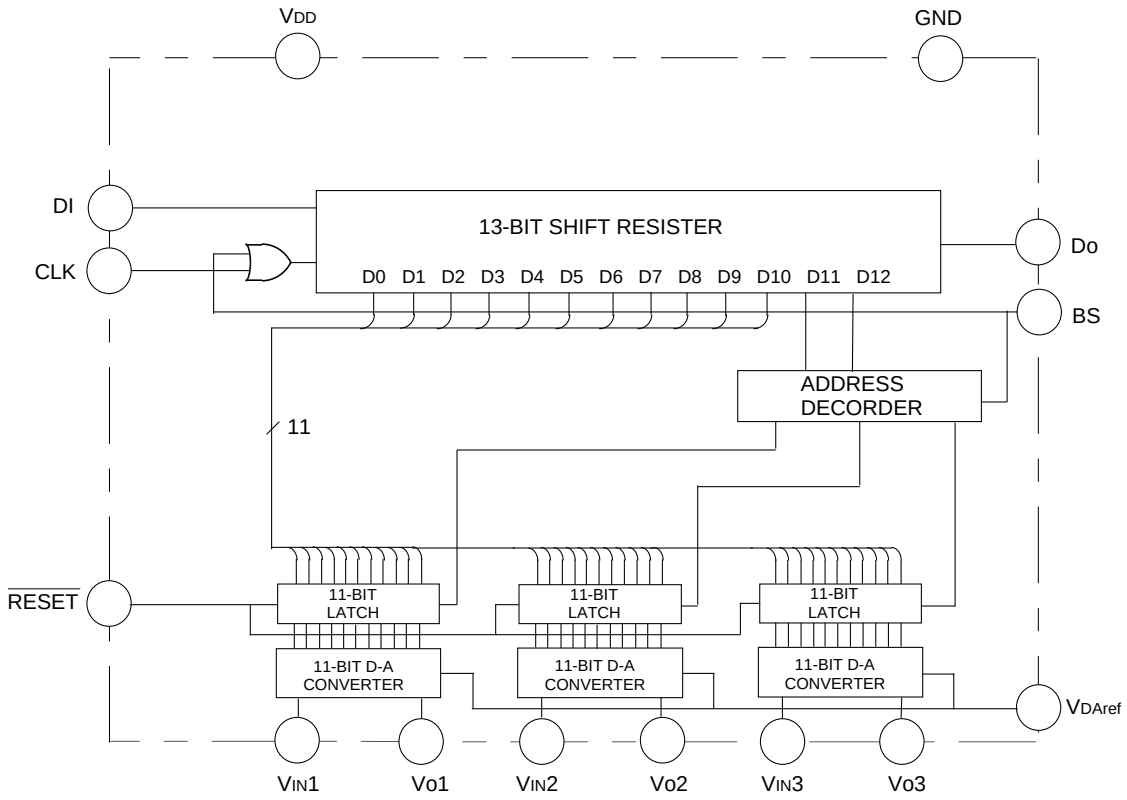

DIGITAL DATA FORMAT

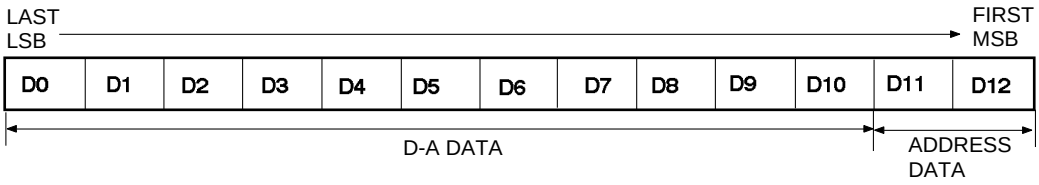

D0	D1	D2	D3	D4	D5	D6	D7	D8	D9	D10	D-A output
0	0	0	0	0	0	0	0	0	0	0	$V_{DA}ref$
1	0	0	0	0	0	0	0	0	0	0	(V_{IN}-$V_{DA}ref$) / 1280 X 1 + $V_{DA}ref$
0	1	0	0	0	0	0	0	0	0	0	(V_{IN}-$V_{DA}ref$) / 1280 X 2 + $V_{DA}ref$
1	1	0	0	0	0	0	0	0	0	0	(V_{IN}-$V_{DA}ref$) / 1280 X 3 + $V_{DA}ref$
⋮	⋮	⋮	⋮	⋮	⋮	⋮	⋮	⋮	⋮	⋮	⋮
1	1	1	1	1	1	1	1	0	0	1	(V_{IN}-$V_{DA}ref$) / 1280 X 1279 + $V_{DA}ref$
0	0	0	0	0	0	0	0	1	0	1	V_{IN}
⋮	⋮	⋮	⋮	⋮	⋮	⋮	⋮	⋮	⋮	⋮	⋮
1	1	1	1	1	1	1	1	1	1	1	V_{IN}

D11	D12	DAC SELECTION
0	0	Don't care
0	1	ch1
1	0	ch2
1	1	ch3

TIMING CHART (MODEL)

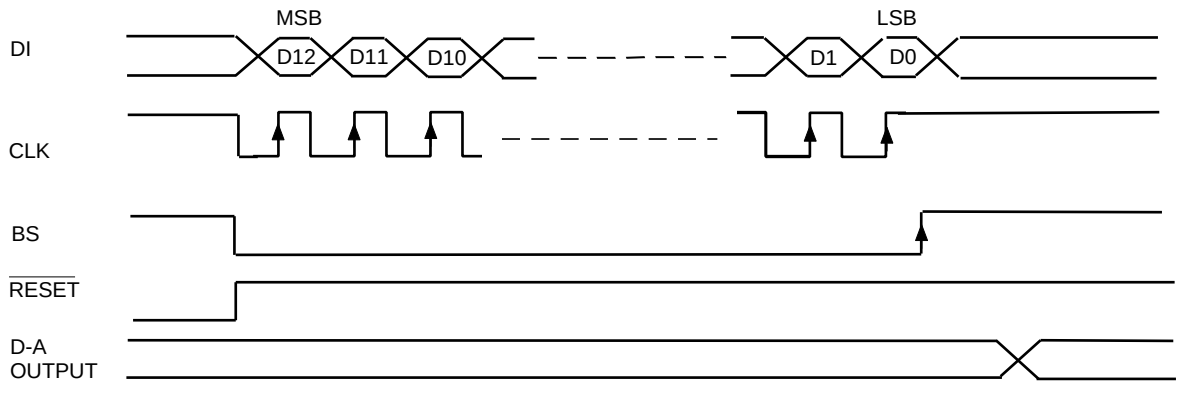

*Input data is carried out BS signal "L" besides CLK signal positive edge.
CLK,BS,is keep generally "H" level.

ABSOLUTE MAXIMUM RATINGS

Symbol	Parameter	Conditions	Ratings	Unit
V_{DD}	Supply voltage		-0.3~+7.0	V
V_{IND}	Digital input voltage(DI,CLK,BS)		-0.3~+7.0	V
V_{IN}	Input voltage		-0.3~V_{DD}+0.3	V
Vo	Output voltage		-0.3~V_{DD}+0.3	V
V_{DA}ref	D-A reference voltage		-0.3~V_{DD}+0.3	V
T_{opr}	Operating temperature		-20~+85	°C
Tstg	Storage temperature		-40~+125	°C

ELECTRICAL CHARACTERISTICS

Digital part(V_{DD},V_{IN}=+5V±10%, V_{DD}≥V_{IN},GND=V_{DA}ref=0V,Ta=-20 ~ +85°C,unless otherwise noted)

Symbol	Parameter	Test conditions	Limits			Unit
			Min.	Typ.	Max.	
V_{DD}	Supply voltage		4.5	5.0	5.5	V
I_{ILK}	Input leak current	VIN=0~V_{DD}	-10		10	µA
I_{IL}	Input low voltage				0.2V_{DD}	V
I_{IH}	Input high voltage		0.8V_{DD}			V
V_{OL}	Output low voltage	I_{OL}=2.5mA			0.4	V
V_{OH}	Output high voltage	I_{OH}=-400µA	V_{DD}-0.4			V

Analog part(V_{DD},V_{IN}=+5V±10%, V_{DD}≥V_{IN},GND=V_{DA}ref=0V,Ta=-20 ~ +85°C,unless otherwise noted)

Symbol	Parameter	Test conditions	Limits			Unit
			Min.	Typ.	Max.	
V_{IN}	Input voltage		0		V_{DD}	V
Vo	Output voltage	V_{IN}=0~V_{DD}	0		V_{DD}	V
I_{IN}	Input current	V_{IN}=5V,VDAref=0V, Proportional to (V_{IN}-V_{DA}ref)		0.75	1.5	mA
I_{DA}ref	D-A reference source current	V_{IN1}=V_{IN2}=V_{IN3}=5V, V_{DA}ref=0V, Proportional to (V_{IN}-V_{DA}ref)	-4.5	-2.25		mA
Io	D-A output sink or source current		-1.0		1.0	µA/LSB
RO	Output impedance	Constant for all D-A output mode		1.8	3.6	kΩ
RES	Resolution			1280		STEP
DNL	ACCURACY Differential nonlinearity		-1		1	LSB
NL	ACCURACY Nonlinearity		-0.6		0.6	%FS
ΔNL	ACCURACY Nonlinearity for channels		-0.4		0.4	%FS

*Polarity of current, (+) is sink into IC and (-) is source from IC.

AC CHARACTERISTICS(V_{DD},V_{IN}=+5V±10%, V_{DD}≥V_{IN},GND=V_{DA}ref=0V,Ta=-20 ~ +85°C)

Symbol	Parameter	Test conditions	Limits			Unit
			Min	Typ	Max	
t_{CKL}	Clock "L"pulse width		200			ns
t_{CKH}	Clock "H"pulse width		200			ns
t_{CR}	Clock rise time				200	ns
t_{CF}	Clock fall time				200	ns
t_{DCH}	Data set up time		60			ns
t_{CHD}	Data hold time		100			ns
t_{CHL}	LD set up time		200			ns
t_{LDC}	LD hold time		100			ns
t_{LDH}	LD "H" pulse width		100			ns
t_{Do}	Data output delay time	CL≤100pF	70		350	ns
t_{LDD}	Data output setting time	No Load			20	µs
	Input•Output response time	f=10kHz			5	

TIMING CHART

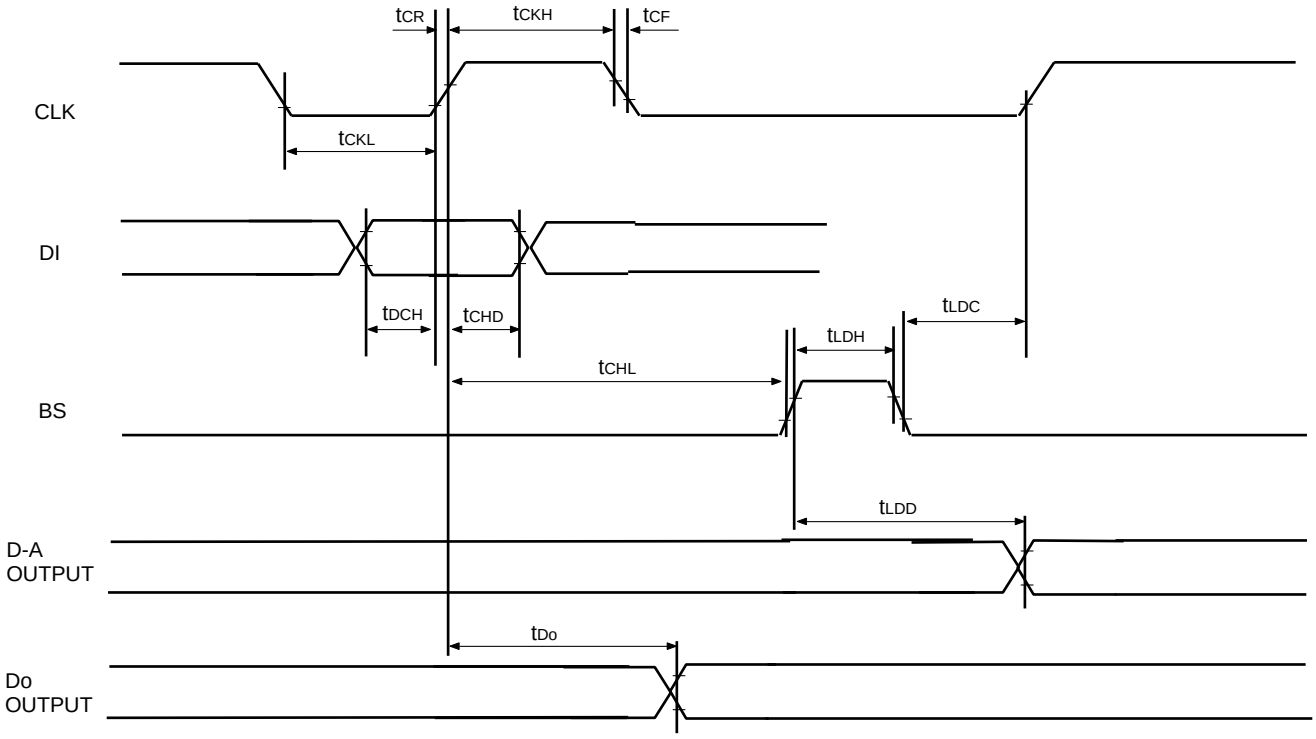

TYPICAL CHARACTERISTICS

M62362P DIFFERENTIAL NONLINEARITY

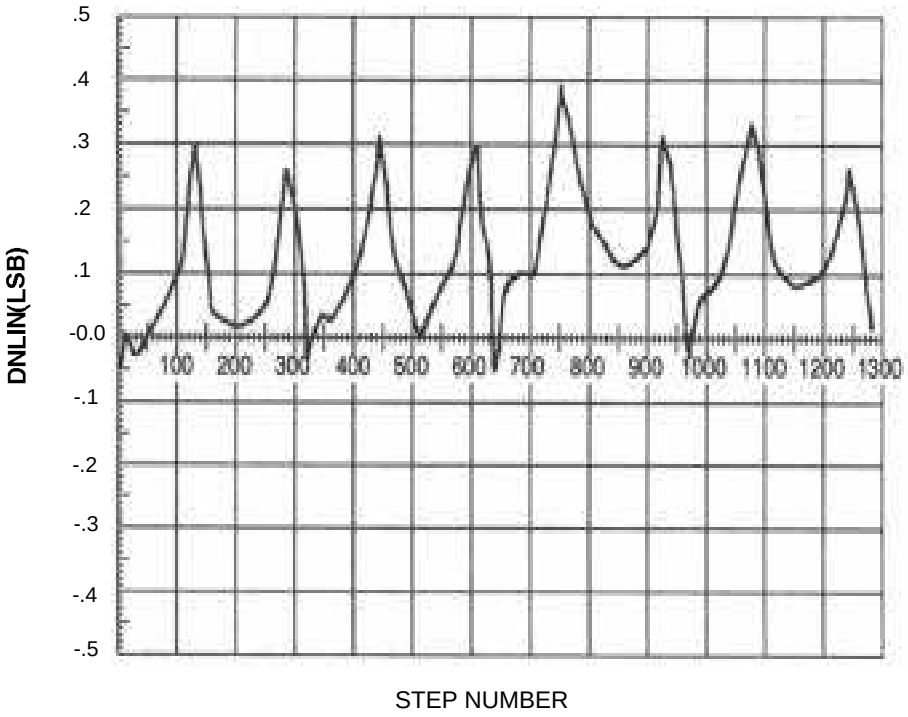

M62362P NONLINEARITY

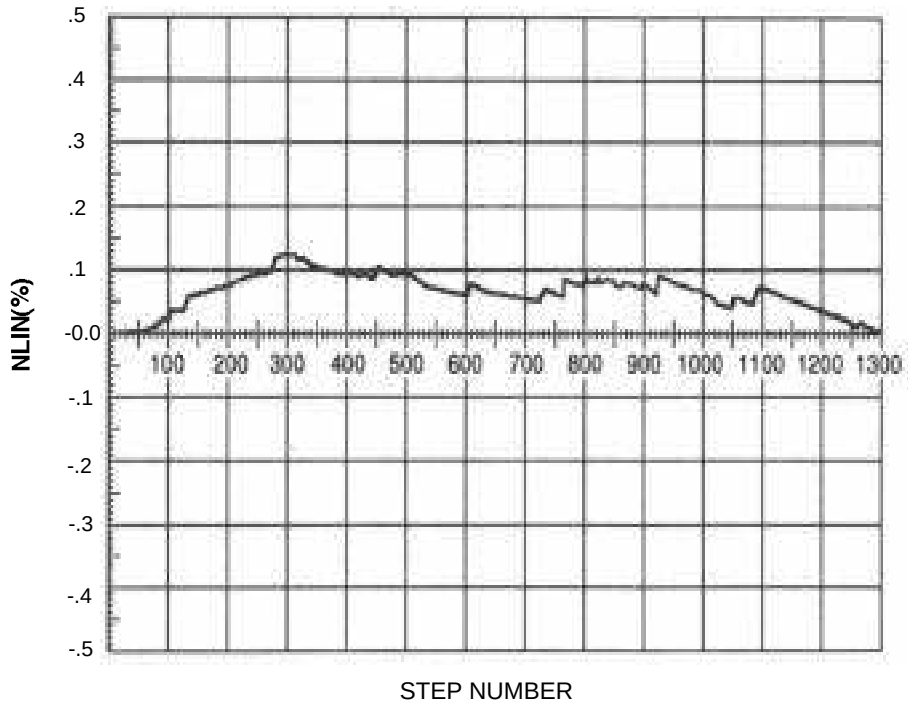

M62362P OUTPUT RISE CHARACTERISTICS(SETTING TIME)

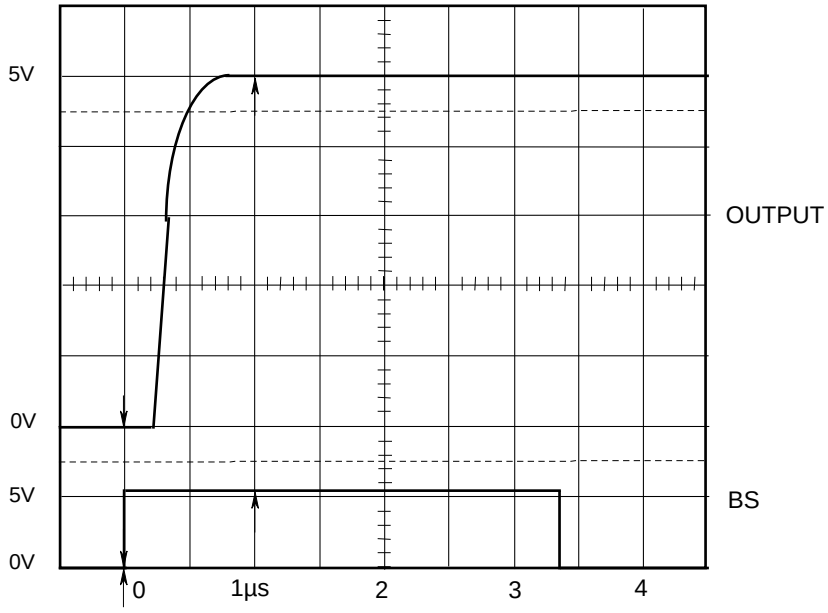

M62362P OUTPUT FALL CHARACTERISTICS(SETTING TIME)

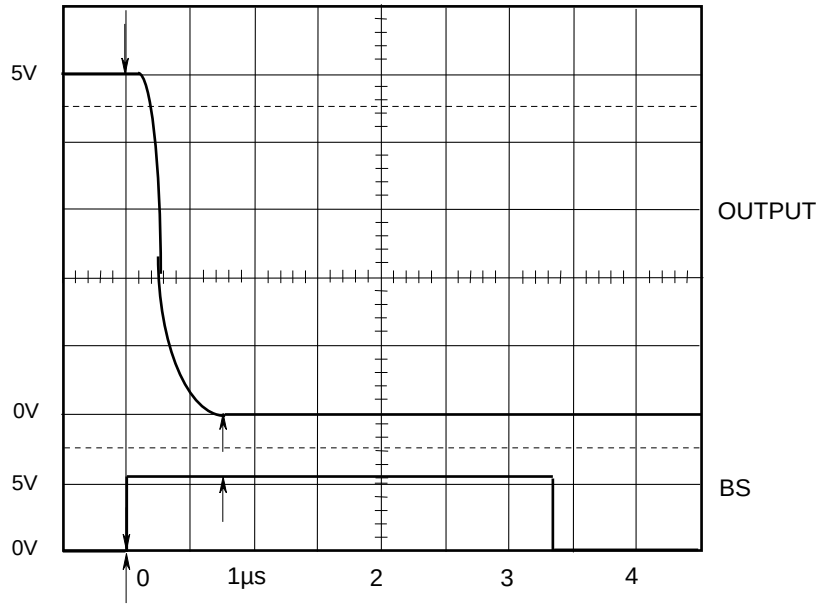

NOTICE
M62362 have 5 terminals these are input free voltage at use.(V_{DD}, $V_{IN}1$,$V_{IN}2$,$V_{IN}3$,V_{DA}ref)If Ripple and Spike is input to these terminals,accuracy of conversion is down .So,When use this device, please connect capacitor among to each terminals and GND for stable operation.

APPLICATION EXAMPLE

