Super-mini Terminal Block Signal Conditioners M5-UNIT

THERMOCOUPLE TRANSMITTER

Functions & Features

- Accepts direct input from a thermocouple and provides a standard process signal
- Linearization and burnout
- Cold junction compensation
- Fast response type available
- High-density mounting
- Power LED

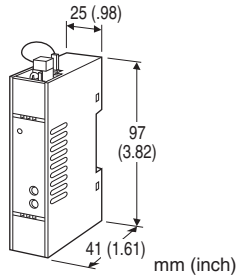

MODEL: M5TS-[1][2]-[3][4]

ORDERING INFORMATION

- Code number: M5TS-[1][2]-[3][4]

Specify a code from below for each [1] through [4].
(e.g. M5TS-2A-R/K/BL/Q)

- Temperature range (e.g. 0 – 800°C)
- Special output range (For codes Z, 0 & 01)
- Specify the specification for option code /Q
(e.g. /C01/V01/S01)

[1] INPUT THERMOCOUPLE

1: (PR) (Usable Range 0 to 1760°C, 32 to 3200°F)
2: K (CA) (Usable range -270 to +1370°C, -454 to +2498°F)
3: E (CRC) (Usable range -270 to +1000°C, -454 to +1832°F)
4: J (IC) (Usable range -210 to +1200°C, -346 to +2192°F)
5: T (CC) (Usable range -270 to +400°C, -454 to +752°F)
6: B (RH) (Usable range 0 to 1820°C, 32 to 3308°F)
7: R (Usable range -50 to +1760°C, -58 to +3200°F)
8: S (Usable range -50 to +1760°C, -58 to +3200°F)
N: N (Usable range -270 to +1300°C, -454 to +2372°F)
0: Specify

[2] OUTPUT

Current

A: 4 – 20 mA DC (Load resistance 550 Ω max.)
D: 0 – 20 mA DC (Load resistance 550 Ω max.)
Z: Specify current (See OUTPUT SPECIFICATIONS)

Voltage

1: 0 – 10 mV DC (Load resistance 100 kΩ min.)
(CE not available)
2: 0 – 100 mV DC (Load resistance 100 kΩ min.)
(CE not available)
3: 0 – 1 V DC (Load resistance 100 Ω min.)
4: 0 – 10 V DC (Load resistance 1000 Ω min.)
5: 0 – 5 V DC (Load resistance 500 Ω min.)
6: 1 – 5 V DC (Load resistance 500 Ω min.)
1W: -10 – +10 mV DC (Load resistance 100 kΩ min.)
(CE not available)
2W: -100 – +100 mV DC (Load resistance 100 kΩ min.)
(CE not available)
3W: -1 – +1 V DC (Load resistance 800 Ω min.)
4W: -10 – +10 V DC (Load resistance 8000 Ω min.)
5W: -5 – +5 V DC (Load resistance 4000 Ω min.)
0: Specify voltage (See OUTPUT SPECIFICATIONS)
01: Specify voltage (See OUTPUT SPECIFICATIONS)
(CE not available)

[3] POWER INPUT

AC Power

M: 85 – 264 V AC (Operational voltage range 85 – 264 V, 47 – 66 Hz)
(CE not available)

DC Power

R: 24 V DC
(Operational voltage range 24 V ±10 %, ripple 10 %p-p max.)

[4] OPTIONS (multiple selections)

Response Time (0 – 90 %)

blank: Standard (≤ 0.5 sec.)
/K: Fast Response (Approx. 25 msec.)

Burnout

blank: Upscale burnout
/BL: Downscale burnout
/BN: No burnout

Other Options

blank: none
/Q: Option other than the above (specify the specification)

SPECIFICATIONS OF OPTION: Q (multiple selections)

COATING (For the detail, refer to M-System's web site.)

/C01: Silicone coating
/C02: Polyurethane coating
/C03: Rubber coating

ADJUSTMENT

/V01: Multi-turn fine adjustment

TERMINAL SCREW MATERIAL

/S01: Stainless steel

GENERAL SPECIFICATIONS

Construction: Terminal block
Connection: M3.5 screw terminals (torque 0.8 N·m)
Screw terminal: Nickel-plated steel (standard) or stainless steel
Housing material: Flame-resistant resin (black)
Isolation: Input to output to power
Overrange output: Approx. -10 to +110 % at 1 – 5 V
Zero adjustment: -2 to +2 % (front)
Span adjustment: 98 to 102 % (front)
At burnout: Downscale ≤ -10 %, Upscale ≥ 110 %,
For output code 4W, Downscale ≤ -3%, Upscale ≥ 103%
Linearization: Standard
Cold junction compensation: CJC sensor attached to the input terminals
Power LED: Green LED turns on when the power is supplied.

INPUT SPECIFICATIONS

Minimum span: 3 mV
Input resistance: 20 kΩ min.
Burnout sensing: 0.1 µA

Lower temperature range & span (in °C)
(PR): Lower range 0 to 880°C; min. span 370°C
K (CA): Lower range -270 to +1200°C; min. span 75°C
E (CRC): Lower range -270 to +750°C; min. span 50°C
J (IC): Lower range -210 to +800°C; min. span 60°C
T (CC): Lower range -270 to +325°C; min. span 75°C
B (RH): Lower range 0 to 750°C; min. span 780°C
R: Lower range -50 to +550°C; min. span 360°C
S: Lower range -50 to +550°C; min. span 380°C
N: Lower range -270 to +1100°C; min. span 110°C

Lower temperature range & span (in °F)
(PR): Lower range 32 to 1616°F; min. span 670°F
K (CA): Lower range -454 to +2192°F; min. span 140°F
E (CRC): Lower range -454 to +1382°F; min. span 90°F
J (IC): Lower range -346 to +1472°F; min. span 110°F
T (CC): Lower range -454 to +617°F; min. span 140°F
B (RH): Lower range 32 to 1382°F; min. span 1450°F
R: Lower range -58 to +1022°F; min. span 680°F
S: Lower range -58 to +1022°F; min. span 700°F
N: Lower range -454 to +2012°F; min. span 200°F

Note 1: The described accuracy may be partially not satisfied when the temperature ranges below 0°C. Consult M-System.
Note 2: Consult M-System for the range out of the above list.

OUTPUT SPECIFICATIONS

■ **DC Current**: 0 – 20 mA DC
Minimum span: 1 mA
Offset: Max. 1.5 times span
Load resistance: Output drive 11 V max.
■ **DC Voltage**
•**Output code 0 (CE)**
Voltage range: -10 – +10 V DC
Minimum span: 1 V
Offset: Max. 1.5 times span
Load resistance: Output drive 10 mA max.; at ≥1 V
Max. 1.25 mA output drive for negative voltage
•**Output code 01 (Not CE)**
Voltage range: -1 – +1 V DC
Minimum span: 10 mV
Offset: Max. 1.5 times span
Load resistance: Min. 100 kΩ
Min. 1 MΩ for negative voltage

INSTALLATION

Power Consumption
•**AC**:
Approx. 2 VA at 100 V
Approx. 3 VA at 200 V
Approx. 3 VA at 264 V
•**DC**: Approx. 2 W
Operating temperature: -5 to +55°C (23 to 131°F)
Operating humidity: 0 to 90 %RH (non-condensing)
Mounting: DIN rail
Weight: 80 g (2.8 oz)

PERFORMANCE in percentage of span

Accuracy (whichever is greater)
K, E, J: ±0.1 % of FS or ±0.2°C (±0.36°F)
T, N: ±0.2 % of FS or ±0.2°C (±0.36°F)
PR, B, R, S: ±0.3 % of FS
(at over 400°C for R, S and PR; over 770°C for B)
Cold junction compensation error
(at 20°C ±10°C or 68°F ±18°F)
K, E, J, T, N: ±0.5°C or ±0.9°F
S, R, PR: ±1°C or ±1.8°F
Temp. coefficient: ±0.015 %/°C (±0.008 %/°F)
(at over 400°C or 750°F for R, S and PR; over 770°C or 1420°F for B)
Burnout response: ≤ 10 sec.
Line voltage effect: ±0.1 % over voltage range
Insulation resistance: ≥ 100 MΩ with 500 V DC
Dielectric strength (input to output to power to ground)
DC powered: 2000 V AC @1 minute
AC powered: 1500 V AC @1 minute

STANDARDS & APPROVALS

EU conformity:
EMC Directive
EMI EN 61000-6-4
EMS EN 61000-6-2
RoHS Directive
EN 50581

FRONT VIEW

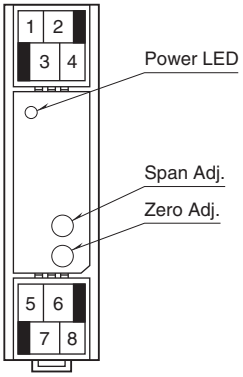

EXTERNAL DIMENSIONS unit: mm (inch)

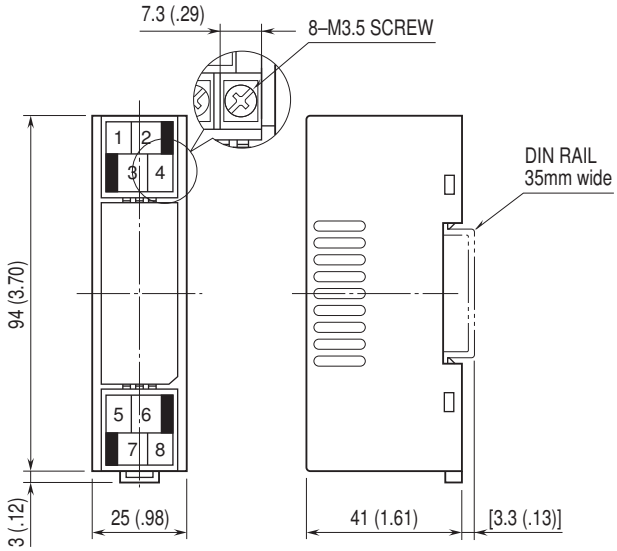

• When mounting, no extra space is needed between units.

TERMINAL ASSIGNMENTS unit: mm (inch)

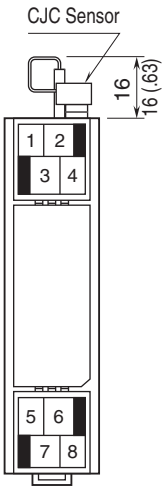

SCHEMATIC CIRCUITRY & CONNECTION DIAGRAM

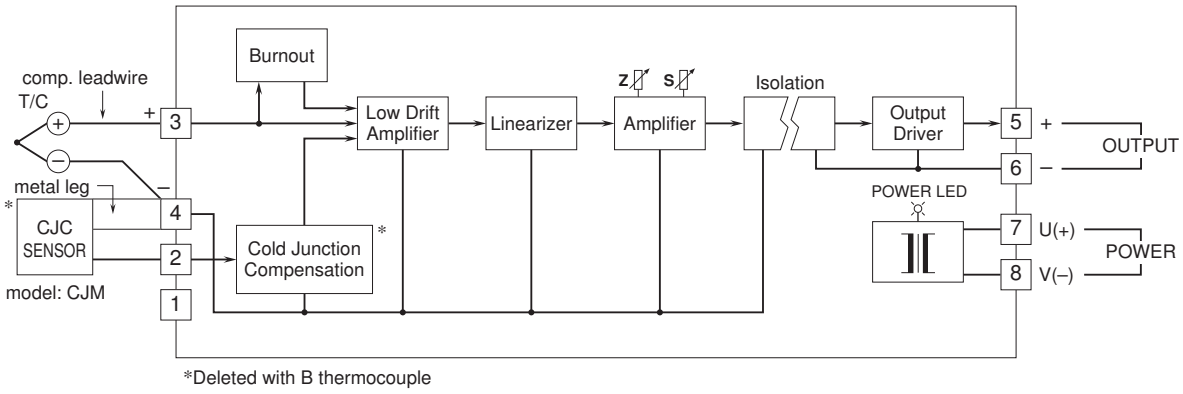

*Deleted with B thermocouple

⚠ Specifications are subject to change without notice.