M52722SP

3-CHANNEL VIDEO PREAMPLIFIER PROVIDED WITH OSD MIX AND RETRACE LINE BLK FOR HIGH-RESOLUTION

DESCRIPTION

M52722SP is a video amplifier provided with OSD mixing function, and a semiconductor IC having three channels of a built-in wideband 180MHz amplifier.

Each channel has the functions of OSD blanking, OSD mixing, retrace line blanking, wideband amplifier, main and sub contrast control, and main brightness. Accordingly, it is structured to best fit the OSD-provided high resolution display. .

FEATURES

- Frequency band : RGB.....180MHz (at $3V_{P-P}$)
  OSD.....50MHz
  Input: RGB.....$0.7V_{P-P}$ (Typ.)
  OSD.....more than $3V_{P-P}$ (positive polarity)
  BLK (for OSD).....more than $3V_{P-P}$ (positive polarity)
  Retrace line BLK.....more than $3V_{P-P}$ (positive polarity)
  Output: RGB.....$4.0V_{P-P}$ (max.)
  OSD.....$4.0V_{P-P}$ (max.)
- Each control of contrast and OSD adjustment includes a main which allows 3 channels to be variable simultaneously, and a sub which allows each channel to be variable independently. Each control pin can be controlled within a range of 0 to 5V.
- A built-in feedback circuit inside IC provides a stable DC level at IC output pins.

APPLICATION

CRT display

RECOMMENDED OPERATING CONDITION

Supply voltage range.....Vcc=11.5 to 12.5V

Rated supply voltage.....Vcc=12.0V

PIN CONFIGURATION (TOP VIEW)

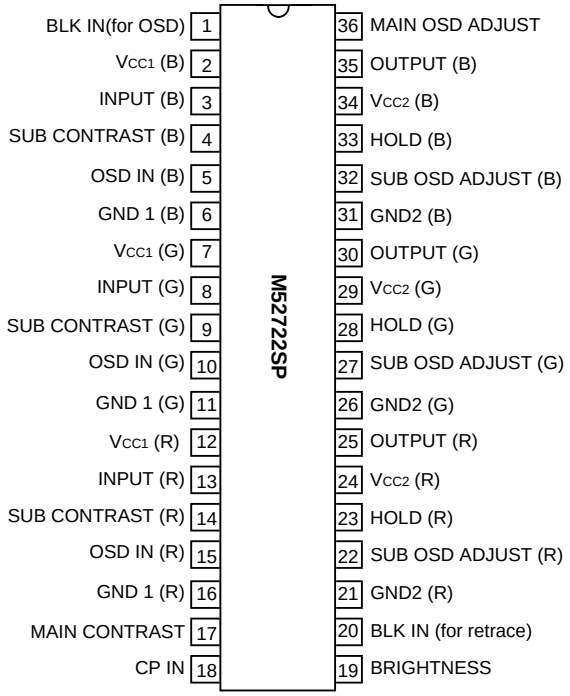

Outline 36P4E

M52722SP

3-CHANNEL VIDEO PREAMPLIFIER PROVIDED WITH OSD MIX AND RETRACE LINE BLK FOR HIGH-RESOLUTION

BLOCK DIAGRAM

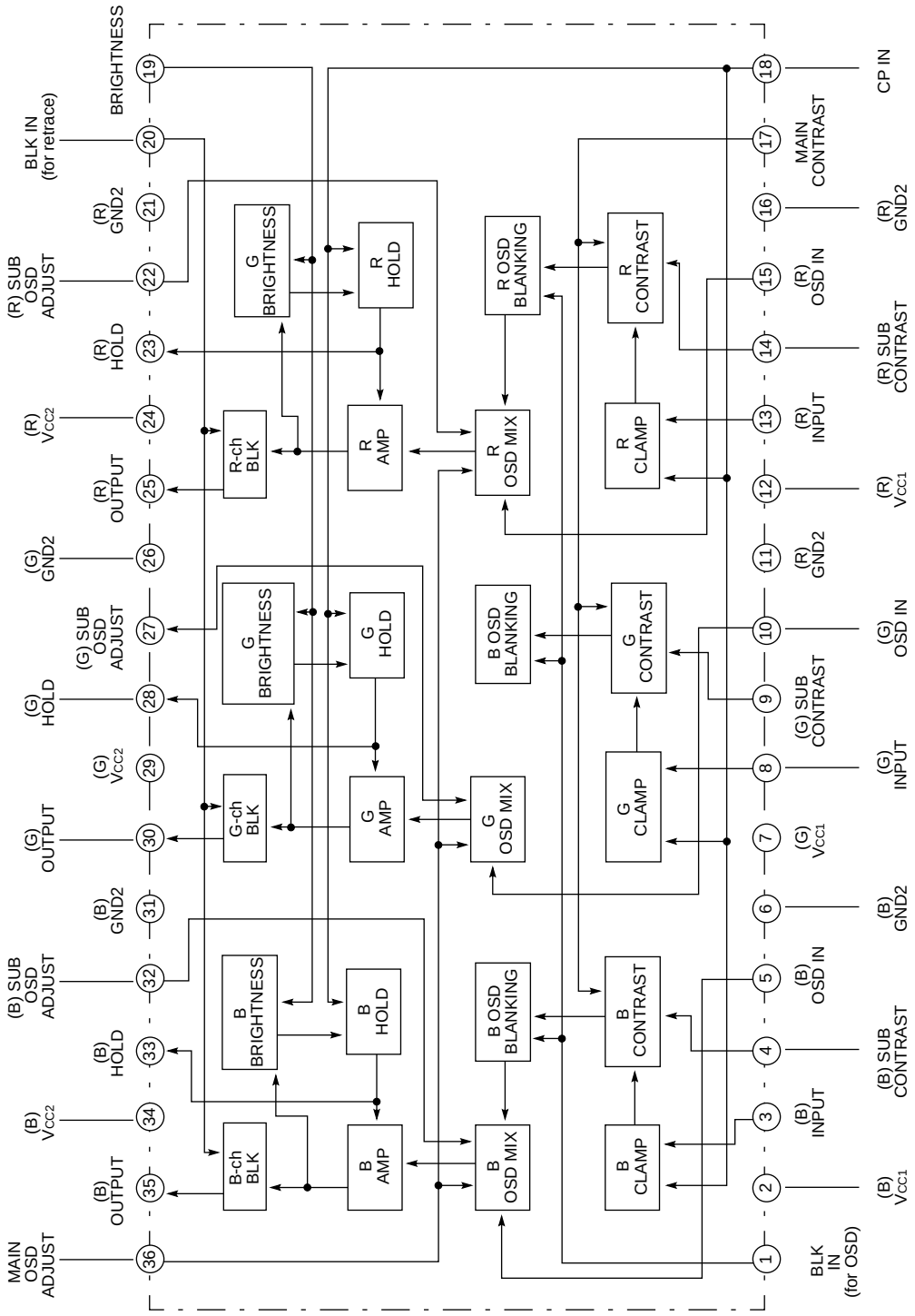

M52722SP

3-CHANNEL VIDEO PREAMPLIFIER PROVIDED WITH OSD MIX AND RETRACE LINE BLK FOR HIGH-RESOLUTION

ABSOLUTE MAXIMUM RATINGS (Ta=25˚C)

Symbol	Parameter	Ratings	Unit
V_{CC}	Supply voltage	13.0	V
P_d	Power dissipation	2403	mW
T_{opr}	Operating temperature	-20 to +85	˚C
$T_{stg'}$	Storage temperature	-40 to +150	˚C
V_{opr}	Recommended operating supply voltage	12.0	V
$V_{opr'}$	Recommended operating supply voltage range	11.5 to 12.5	V
S_{arge}	Surge pressure	±200	V

ELECTRICAL CHARACTERISTICS (Vcc=12V, and Ta=25˚C, unless otherwise noted)

Symbol	Parameter	Test point	Input			External power supply(v)					Pulse input			Limits			Unit
			SW3 R-ch	SW8 G-ch	SW13 B-ch	V4	V17	V19	V32	V36	SW18	SW1 5,10,15	SW20	Min.	Typ.	Max.	
Icc	Circuit current	A	a _	a _	a _	5	5	5	5	2	b SG4	a _	a _	70	100	140	mA
Vomax	Output dynamic range	T.P35 T.P30 T.P25	b SG5	b SG5	b SG5	5	5	Vari-able	-	-	b SG4	a _	a _	6.0	7.5	9.0	V_{P-P}
Vimax	Maximum allowable input	T.P35 T.P30 T.P25	b SG5	b SG5	b SG5	5	2.5	2	-	-	b SG4	a _	a _	1	1.6	-	V_{P-P}
Gv	Maximum gain	T.P35 T.P30 T.P25	b SG5	b SG5	b SG5	5	5	2	-	-	b SG4	a _	a _	15.4	17.4	20	dB
ΔGv	Relative maximum gain	Take the ratio of the above test values												0.8	1	1.2	-
V_{CR1}	Contrast control characteristics (at typ.)	T.P35 T.P30 T.P25	b SG5	b SG5	b SG5	5	4	2	-	-	b SG4	a _	a _	14.3	15.8	17.3	dB
ΔV_{CR1}	Relative contrast control characteristics (at typ.)	Take the ratio of the above test values												0.8	1	1.2	-
V_{CR2}	Contrast control characteristics (at min.)	T.P35 T.P30 T.P25	b SG5	b SG5	b SG5	5	1	2	-	-	b SG4	a _	a _	0.4	0.7	1.0	V_{P-P}
ΔV_{CR2}	Relative contrast control characteristics (at min.)	Take the ratio of the above test values												0.8	1	1.2	-
V_{SCR1}	Sub-contrast control characteristics (at typ.)	T.P35 T.P30 T.P25	b SG5	b SG5	b SG5	4	5	2	-	-	b SG4	a _	a _	14.3	15.8	17.3	dB
ΔV_{SCR1}	Sub-contrast control characteristics (at typ.)	Take the ratio of the above test values												0.8	1	1.2	-
V_{SCR2}	Sub-contrast control characteristics (at min.)	T.P35 T.P30 T.P25	b SG5	b SG5	b SG5	1	5	2	-	-	b SG4	a _	a _	0.4	0.8	1.2	V_{P-P}
ΔV_{SCR2}	Relative sub-contrast control characteristics (at min.)	Take the ratio of the above test values												0.8	1	1.2	-
V_{SCR3}	Contrast and sub-contrast control characteristics (both main and sub at typ.)	T.P35 T.P30 T.P25	b SG5	b SG5	b SG5	3	3	2	-	-	b SG4	a _	a _	1.1	1.8	2.5	V_{P-P}
ΔV_{SCR3}	Relative contrast and sub-contrast control characteristics (both main and sub at typ.)	Take the ratio of the above test values												0.8	1	1.2	-
V_{B1}	Brightness control characteristics (at max.)	T.P35 T.P30 T.P25	a _	a _	a _	5	5	4	-	-	b SG4	a _	a _	3.0	3.6	4.2	V
ΔV_{B1}	Relative brightness control characteristics (at max.)	Take the ratio of the above test values												-0.3	0	0.3	V
V_{B2}	Brightness control characteristics (at typ.)	T.P35 T.P30 T.P25	a _	a _	a _	5	5	2	-	-	b SG4	a _	a _	1.1	1.6	2.1	V
ΔV_{B2}	Relative brightness control characteristics (at typ.)	Take the ratio of the above test values												-0.3	0	0.3	V
V_{B3}	Brightness control characteristics (at min.)	T.P35 T.P30 T.P25	a _	a _	a _	5	5	1	-	-	b SG4	a _	a _	0.3	0.7	1.1	V
ΔV_{B3}	Relative brightness control characteristics (at min.)	Take the ratio of the above test values												-0.3	0	0.3	V

ELECTRICAL CHARACTERISTICS (cont.)

Symbol	Parameter	Test point	Input			External power supply(v)					Pulse input			Limits			Unit
			SW3 R-ch	SW8 G-ch	SW13 B-ch	V4	V17	V19	V32	V36	SW18	SW1 5,10,15	SW20	Min.	Typ.	Max.	
F_{C1}	Frequency characteristics (f=50MHz at max.)	T.P35 T.P30 T.P25	b SG1	b SG1	b SG1	5	Variable	-	-	-	c _	a _	a _	-2	0	2.5	dB
ΔF_{C1}	Relative frequency characteristics (f=50MHz at max.)	Take the ratio of the above test values												-1	0	1	-
F_{C1}'	Frequency characteristics (f=180MHz at max.)	T.P35 T.P30 T.P25	b SG2	b SG2	b SG2	5	Variable	-	-	-	c _	a _	a _	-3	-2.3	3	dB
ΔF_{C1}'	Relative frequency characteristics (f=180MHz at max.)	Take the ratio of the above test values												-1	0	1	-
F_{C2}	Frequency characteristics (f=180MHz at typ.)	T.P35 T.P30 T.P25	b SG2	b SG2	b SG2	5	Variable	-	-	-	c _	a _	a _	-3	0	3	dB
ΔF_{C2}	Relative frequency characteristics (f=180MHz at typ.)	Take the ratio of the above test values												-1	0	1	-
C.T.1	Crosstalk1(f=50MHz)	T.P35 T.P30 T.P25	b SG1	a _	a _	5	5	-	-	-	c _	a _	a _	-	-30	-20	dB
C.T.1'	Crosstalk1(f=180MHz)	T.P35 T.P30 T.P25	b SG2	a _	a _	5	5	-	-	-	c _	a _	a _	-	-20	-15	dB
C.T.2	Crosstalk2(f=50MHz)	T.P35 T.P30 T.P25	a _	b SG1	a _	5	5	-	-	-	c _	a _	a _	-	-30	-20	dB
C.T.2'	Crosstalk2(f=180MHz)	T.P35 T.P30 T.P25	a _	b SG2	a _	5	5	-	-	-	c _	a _	a _	-	-20	-15	dB
C.T.3	Crosstalk3(f=50MHz)	T.P35 T.P30 T.P25	a _	a _	b SG1	5	5	-	-	-	c _	a _	a _	-	-30	-20	dB
C.T.3'	Crosstalk3(f=180MHz)	T.P35 T.P30 T.P25	a _	a _	b SG2	5	5	-	-	-	c _	a _	a _	-	-20	-15	dB
Tr	Pulse characteristics 1	T.P35 T.P30 T.P25	b SG3	b SG3	b SG3	5	Variable	Variable	-	-	b SG4	a _	a _	-	2	-	nsec
Tf	Pulse characteristics 2	T.P35 T.P30 T.P25	b SG3	b SG5	b SG5	5	Variable	Variable	-	-	b SG4	a _	a _	-	2	-	nsec
V14th	Clamping pulse threshold voltage	T.P35 T.P30 T.P25	b SG5	b SG5	b SG5	5	5	2	-	-	b SG4	a _	a _	1.0	1.5	2.5	V_{DC}
W14	Clamping pulse operation min. width	T.P35 T.P30 T.P25	b SG5	b SG5	b SG5	5	5	2	-	-	b SG4	a _	a _	0.2	0.5	-	µsec
P_{DCH}	Pedestal voltage temperature characteristics1	T.P35 T.P30 T.P25	b SG5	b SG5	b SG5	5	5	2	-	-	b SG4	a _	a _	-0.3	0	0.3	V_{DC}
P_{DCL}	Pedestal voltage temperature characteristics2	T.P35 T.P30 T.P25	b SG5	b SG5	b SG5	5	5	2	-	-	b SG4	a _	a _	-0.3	0	0.3	V_{DC}
OTr	OSD pulse characteristics 1	T.P35 T.P30 T.P25	a _	a _	a _	5	5	Variable	5	Variable	b SG4	SW1 is a, and others b. SG6	a _	-	3	6	nsec
OTf	OSD pulse characteristics 2	T.P35 T.P30 T.P25	a _	a _	a _	5	5	Variable	5	Variable	b SG4	SW1 is a, and others b. SG6	a _	-	3	6	nsec
Oaj1	Main OSD adjustment control characteristics (at max.)	T.P35 T.P30 T.P25	a _	a _	a _	5	5	2	5	4	b SG4	b SG6	a _	3.7	4.3	5.0	V_{P-P}
ΔOaj1	Relative main OSD adjustment control characteristics (at max.)	Take the ratio of the above test values												0.8	1	1.2	-
Oaj2	Main OSD adjustment control characteristics (at min.)	T.P35 T.P30 T.P25	a _	a _	a _	5	5	2	5	0	b SG4	b SG6	a _	-	0	0.5	V_{P-P}
ΔOaj2	Relative main OSD adjustment control characteristics (at min.)	Take the ratio of the above test values												0.8	1	1.2	-
OSDth	OSD input threshold voltage	T.P35 T.P30 T.P25	a _	a _	a _	5	5	2	5	5	b SG4	SW1 is a, and others b. SG6	a _	1.7	2.5	3.5	V_{DC}
V1th	BLK input threshold voltage	T.P35 T.P30 T.P25	b SG5	b SG5	b SG5	5	5	2	5	5	b SG4	SW1 is a, and others b. SG6	a _	1.7	2.5	3.5	V_{DC}

ELECTRICAL CHARACTERISTICS (cont.)

Symbol	Parameter	Test point	Input			External power supply(v)					Pulse input			Limits			Unit
			SW3 R-ch	SW8 G-ch	SW13 B-ch	V4	V17	V19	V32	V36	SW18	SW1 5,10,15	SW20	Min.	Typ.	Max.	
SOaj1	SUB OSD adjustment control characteristics (at typ.)	T.P35 T.P30 T.P25	a _	a _	a _	5	5	2	2	5	b SG4	b SG6	a _	1.6	2.2	2.6	V_{P-P}
SOaj2	SUB OSD adjustment control characteristics (at min.)	T.P35 T.P30 T.P25	a _	a _	a _	5	5	2	0	5	b SG4	b SG6	a _	-	0	0.5	V_{P-P}
H_{BLK}	Retrace line BLK characteristics	T.P35 T.P30 T.P25	a _	a _	a _	5	5	2	0	0	a _	a _	b SG7	-	0.2	0.5	V_{DC}
HVth	Retrace line BLK input threshold value	T.P35 T.P30 T.P25	a _	a _	a _	5	5	2	0	0	a _	a _	b SG7	0.5	1.5	2.5	V_{DC}

ELECTRICAL CHARACTERISTICS TEST METHOD

Note: SW/NO of signal input pin and SW/NO of pulse input pin, which have already been described in the electrical characteristics table, are omitted, and SW/NO of external power supply will only be described as follows:

Sub-OSD adjustment voltages, V32, V27 and V22, which are always set to the identical value, are represented by V32 in the electrical characteristics table. In addition, sub-contrast voltages, V4, V9 and V14, which are also set to the identical value, are represented by V4 in the electrical characteristics table.

Icc circuit current

Conditions shall be as specified in the electrical characteristics table, and take measurements with ammeter A when SWA is turned to the b side.

Vomax output dynamic range

Follow the following procedure to set V19.

1. Input SG5 to pin ⑬ (pin ⑧ or pin ③), gradually reduce V19, and read the lower part voltage when the lower part of input waveform of T.P25 (T.P30 or T.P35) is distorted to let the reading be V_{OLR} (V_{OLG} or V_{OLB}).
2. Then, gradually raise V19, and read the upper part voltage when the upper part of output waveform of T.P25 (T.P30 or T.P35) is distorted to let the reading be V_{OHR} (V_{OHG} or V_{OHB}).
3. Vomax is found by:

$V_{omax}=V_{OHR}(V_{OHG}, V_{OHB})-V_{OLR}(V_{OLG}, V_{OLB})$

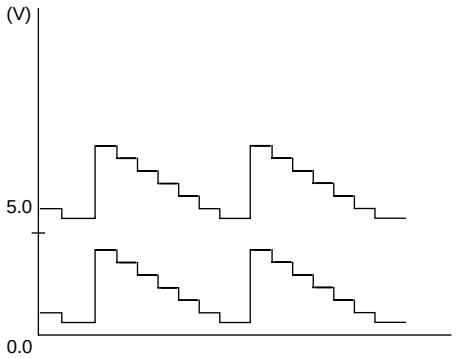

T.P25 output waveform (T.P30 and T.P35 are also the same)

Vimax maximum allowable input

Change V17 to 2.5V, gradually increase input signal amplitude from 700m V_{P-P}, and read input signal amplitude when output signal starts to be distorted.

Gv and ΔGv maximum gain and relative maximum gain

1. Input SG5 to pin ⑬ (pin ⑧ or pin ③), and read the output amplitude of T.P25 (T.P30 or T.P35) at this time to let the reading be V_{OR1} (V_{OG1} or V_{OB1}).
2. Maximum gain Gv is found by:

$$G_V=20LOG\ \frac{V_{OR1}(V_{OG1}, V_{OB1})\ [V_{P-P}]}{0.7\ [V_{P-P}]}$$

3. Relative maximum gain ΔG is found by

$\Delta G_V=V_{OR1}/V_{OG1}, V_{OG1}/V_{OB1}, V_{OB1}/V_{OR1}$

through respective calculation.

V_{CR1} contrast control characteristics and
ΔV_{CR1} relative contrast control characteristics (at typ.)

1. Follow the electrical characteristics table except changing V17 to 4V.
2. Read the output amplitude of T.P25 (T.P30 or T.P35) at this time, and let the reading be V_{OR2} (V_{OG2} or V_{OB2}).
3. Contrast control characteristics VCR1 and relative contrast control characteristics ΔVCR1 is found by

$$V_{CR1}=20LOG\ \frac{V_{OR2}(V_{OG2}, V_{OB2})\ [V_{P-P}]}{0.7\ [V_{P-P}]}$$

$\Delta V_{CR1}=V_{OR1}/V_{OG1}, V_{OG1}/V_{OB1}, V_{OB1}/V_{OR1}$

through respective calculation.

V_{CR2} contrast control characteristics and
ΔV_{CR2} relative contrast control characteristics (at min.)

1. Follow the electrical characteristics table except changing V17 to 1.0V.
2. Read the output amplitude of T.P25 (T.P30 or T.P35) at this time to let the reading be V_{OR3} (V_{OG3} or V_{OB3}). This value represents V_{CR2}.
3. Relative contrast control characteristics ΔV_{CR2} is found by:

$V_{OR2} = V_{OR3}/ V_{OG3}, V_{OG3}/ V_{OB3}/ , V_{OB3}/V_{OR3}$

V_{SCR1} sub-contrast control characteristics and ΔV_{SCR1} relative sub-contrast control characteristics (at typ.)

1. Follow the electrical characteristics table except changing V4,V9 and V14 to 4.0V.
2. Read the output amplitude of T.P25 (T.P30 or T.P35) to let the reading be V_{OR4} (V_{OG4} or V_{OB4}).
3. Sub-contrast control characteristics V_{SCR1} and relative sub-contrast control characteristics ΔV_{SCR1} are found by

$$V_{SCR1}=20LOG\ \frac{V_{OR4}(V_{OG4}, V_{OB4})\ [V_{P-P}]}{0.7\ [V_{P-P}]}$$

$\Delta V_{SCR1}=V_{OR4}/V_{OG4}$, V_{OG4}/V_{OB4}, V_{OB4}/V_{OR4}

through respective calculation.

V_{SCR2} sub-contrast control characteristics and ΔV_{SCR2} relative sub-contrast control characteristics (at min.)

1. Follow the electrical characteristics table except changing V4, V9 and V14 to 1.0V.
2. Read the output amplitude of T.P25 (T.P30 or T.P35) at this time to let the reading be V_{OR5} (V_{OG5} or V_{OB5}). This value represents V_{SCR2}.
3. Relative sub-contrast control characteristics ΔV_{SCR2} is found by:

$\Delta V_{SCR2}=V_{OR5}/V_{OG5}$, V_{OG5}/V_{OB5}, V_{OB5}/V_{OR5}

V_{SCR3} contrast and sub-contrast control characteristics and ΔV_{SCR3} relative contrast and sub-contrast control characteristics (at typ.)

1. Follow the electrical characteristics table except changing V17 to 3.0V, and V4, V9 and V14 to 3.0V.
2. Read the output amplitude of T.P25 (T.P30 or T.P35) at this time, and let the reading be VOR6 (V_{OG6} or V_{OB6}). This value represents V_{SCR3}.
3. Relative sub-contrast control characteristics ΔV_{SCR3} is found by:

$\Delta V_{SCR3}=V_{OR6}/V_{OG6}$, V_{OG6}/V_{OB6}, V_{OB6}/V_{OR6}

V_{B1} brightness control characteristics and ΔV_{B1} relative brightness characteristics (at max.)

1. The conditions shall be as specified in the electrical characteristics table.
2. Measure the output of T.P25 (T.P30 or T.P35) at this time with an ammeter, and let it be V_{OR7} (V_{OG7} or V_{OB7}) to let it be V_{B1}, respectively.
3. For relative control characteristics, further, measure difference between channels from V_{OR7}, V_{OG7} or V_{OB7}.

$$\Delta V_{B1}=V_{OR7}-V_{OG7}\ [V]$$
$$=V_{OG7}-V_{OB7}$$
$$=V_{OB7}-V_{OR7}$$

V_{B2} brightness control characteristics and ΔV_{B2} relative brightness control characteristics (at typ.)

1. The conditions shall be as specified in the electrical characteristics table.
2. Use an ammeter to measure the output of T.P25 (T.P30 or T.P35) at this time to let the value be V_{OR7} (V_{OG7} or V_{OB7}). This value represents V_{B2}.
3. For relative brightness control characteristics ΔV_{B2}, further, calculate difference between channels from V_{OR7}, V_{OG7} or V_{OB7}.

$$\Delta V_{B2}=V_{OR7'}-V_{OG7'}\ [V]$$
$$=V_{OG7'}-V_{OB7'}$$
$$=V_{OB7'}-V_{OR7'}$$

V_{B3} brightness control characteristics and ΔV_{B3} relative brightness control characteristics (at min.):

1. The conditions shall be as specified in the electrical characteristics table.
2. Use an ammeter to measure the output of T.P25 (T.P30 or T.P35) at this time to let the value be $V_{OR7''}$ ($V_{OG7''}$ or $V_{OB7''}$). This value represents V_{B3}.
3. For relative control characteristics ΔVB3, further, calculate difference between channels from $V_{OR7''}$, $V_{OG7''}$ or $V_{OB7''}$.

$$\Delta V_{B3}=V_{OR7''}-V_{OG7''}\ [V]$$
$$=V_{OG7''}-V_{OB7''}$$
$$=V_{OB7''}-V_{OR7''}$$

F_{C1} and ΔF_{C1} frequency characteristics 1 and relative frequency characteristics (f=50MHz at max.) and $F_{C1'}$ and $\Delta F_{C1'}$ frequency characteristics 1 and relative frequency characteristics (f=180MHz at max.)

1. The conditions shall be as specified in the electrical charactristics table.
2. Whilst SG1 and SG2 are used, input SGA first, apply voltage to the input pin (pin ③, pin ⑧ or pin ⑬) through about 2kΩ of resistor so as to provide 2.5V on the lower side of input signal. In addition, apply voltage to the hold pin (pin㉓, pin ㉘ or pin ㉝) to ensure that the output wave of T.P25 (T.P30 or T.P35) will not be jammed so as to allow the lower side of the sine wave, an output signal to be 2V. Adjust the main contrast voltage (17V) at this time to allow the output amplitude to be $4.0V_{P-P}$. Then, change the input signal to SG1 or SG2 to measure each output amplitude.
3. Now, when letting this test value be

output amplitude $4.0V_{P-P}$ when SGA is input,
output amplitude V_{OR8} (V_{OG8} or V_{OB8})
when SG1 is input, and
output amplitude V_{OR9} (V_{OG9} or V_{OB9}),

frequency characteristics F_{C1} or $F_{C1'}$ is calculated from:

$$F_{C1}=20LOG\ \frac{V_{OR8}(V_{OG8}, V_{OB8})\ [V_{P-P}]}{4.0\ [V_{P-P}]}$$

$$F_{C1'}=20LOG\ \frac{V_{OR9}(V_{OG9}, V_{OB9})\ [V_{P-P}]}{4.0\ [V_{P-P}]}$$

4. For relative frequency bands ΔF_{C1} and $\Delta F_{C1'}$, calculate difference in F_{C1} and F_{C1} for each channel.

F_{C2} and ΔF_{C2} frequency characteristics 2 and relative frequency characteristics 2 (f=180MHz at typ.)

The same as for F_{C1}, ΔF_{C1} and $\Delta F_{C1'}$ applies except adjusting the main contrast voltage (V17) and allowing the amplitude of output signal when SGA is input to be 1.0V_{P-P}.

C.T.1 crosstalk 1 (f=50MHz) and
C.T.1' crosstalk 1 (f=180MHz)

1. The conditions shall be as specified in the electrical characteristics. (Set the input pin and hold pin as in the case of F_{C1}, ΔF_{C1}, $F_{C1'}$ and $\Delta F_{C1'}$)
2. Input SG1 (or SG2) to pin ⑬ (R-ch) only, measure the output waveform amplitude of T.P25 (T.P30 or T.P35) to be V_{OR}, V_{OG} or V_{OB}.
3. Crosstalk C.T.1 (C.T.1')

$$\text{C.T.1=20log}\ \frac{V_{OG} \text{ or } V_{OB}\ [V_{P-P}]}{V_{OR}\ [V_{P-P}]}\ [\text{dB}]$$
(C.T.1')

C.T.2 crosstalk 2 (f=50MHz) and
C.T.2' corsstalk 2 (f=180MHz)

1. Change the input pin to pin ⑧ (G-ch), and read the output as in the case of C.T.1 or C.T.1'.
2. Crosstalk C.T.2 (C.T.2') is found by:

$$\text{C.T.2=20log}\ \frac{V_{OR} \text{ or } V_{OB}\ [V_{P-P}]}{V_{OG}\ [V_{P-P}]}\ [\text{dB}]$$
(C.T.2')

C.T.3 crosstalk 3(f=50MHz) and
C.T.3' crosstalk 3(f=180MHz)

1. Change the input pin to pin ③ (B-ch), and read the output as in the case of C.T.1 or C.T.1'.
2. Crosstalk C.T.3 (C.T.3') is found by:

$$\text{C.T.3=20log}\ \frac{V_{OR} \text{ or } V_{OG}\ [V_{P-P}]}{V_{OB}\ [V_{P-P}]}\ [\text{dB}]$$
(C.T.2')

Tr, and Tf, Pulse characteristics 1 and pulse characteristics 2

1. The conditions shall be as specified in the electrical characteristics table. Adjust the main contrast voltage (V17) and brightness voltage (V19), and allow the output signal amplitude to be 4.0Vp-p, and the black level 2.0V.
2. Use an active probe to measure rise Tr1 and fall Tf1 at 10% to 90% of input pulse.
3. Then, use an active probe to measure rise Tr2 and fall Tf2 at 10% to 90% of output pulse.
4. Pulse characteristics Tr and Tf:

$$\text{Tr (nsec)} = \sqrt{(Tr2)^2 - (Tr1)^2}$$

$$\text{Tf (nsec)} = \sqrt{(Tf2)^2 - (Tf1)^2}$$

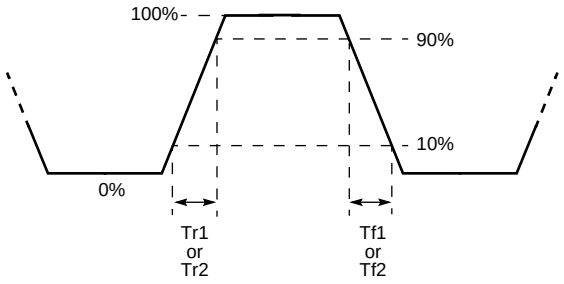

V14th clamping pulse threshold voltage

1. The conditions shall be as specified in the electrical characteristic table.
2. Gradually reduce SG4 level at this time, while monitoring the output signal (pedestal voltage: about 1.8V), and measure SG4 top level when the pedestal voltage of output signal is not stabilized and starts to fall.

W14 minimum clamping pulse operation width

Gradually reduce SG4 pulse width, and measure SG4 pulse width (1.5V from GND) when the pedestal voltage of output signal is not stabilized and starts to fall.

P_{DCH} and P_{DCL}, pedestal voltage temperature characteristics 1 and pedestal voltage temperature characteristics 2

1. The conditions shall be as specified in the electrical characteristics table.
2. Measure pedestal voltage at room temperature to let the value be P_{DC1}.
3. Then, measure pedestal voltage at -20˚C and 85˚C to let the value be P_{DC2} or P_{DC3}.
4. $P_{DCH}=P_{DC1}-P_{DC2}$
   $P_{DCL}=P_{DC1}-P_{DC3}$

OTr and OTf, OSD pulse characteristics 1 and OSD pulse characteristics 2

1. The conditions shall be as specified in the electrical characteristics table. Adjust main OSD adjustment voltage (V36) and brightness voltage (V19) to allow output signal amplitude to become 3.0Vp-p, and black level 2.0.
2. Use an active probe to measure rise OTr1 and fall OTf1 at 10% to 90% of input pulse.
3. Use an active probe to measure rise OTtr2 and fall OTf2 at 10% to 90% of output pulse.
4. OSD pulse characteristics OTr and OTf are found by:

$$\text{OTr (nsec)} = \sqrt{(OTr2)^2 - (OTr1)^2}$$

$$\text{OTf (nsec)} = \sqrt{(OTf2)^2 - (OTf1)^2}$$

Oaj1 main OSD adjustment control characteristics (at max.) and
ΔOaj1 relative main OSD adjustment control characteristics (at max.)

1. The conditions shall be as specified in the electrical characteristics table.
2. Let output signal pedestal voltage of T.P25 (T.P30 or T.P35) be V_{LRA} (V_{LGA} or V_{LBA}) and voltage in the OSD area be V_{HRA} (V_{HGA} or V_{HBA}).
3. If letting Oaj1 be V_{ORA} (V_{OGA} or V_{OBA}),
   Oaj1=V_{ORA} (V_{OGA}, V_{OBA}) = V_{HRA}-V_{LRA}
   (V_{HGA}-V_{LGA}, V_{HBA}-V_{LBA})
4. Relative OSD adjustment control characteristics ΔOaj1:
   ΔOaj1=V_{ORA}/V_{OGA}, V_{OGA}/V_{OBA}, V_{OBA}/V_{ORA}

Oaj2 main OSD adjustment control characteristics (at min.) and
ΔOaj2 relative main OSD adjustment control characteristics (at min.)

Change V36 to 0V, and obtain Oaj2 or ΔOaj2 as in the case of Oaj1 or ΔOaj1.

OSDth OSD input threshold voltage

1. The conditions shall be as specified in the electrical characteristics table.
2. Gradually reduce SG6 level at this time, while monitoring the output, and measure top SG6 level when output is stopped to let the value be OSDth.

V1th BLK input threshold voltage

1. The conditions shall be as specified in the electrical characteristics table.
2. Verify at this time that no signal is output with a timing in which output is synchronized with SG6.
   (OSD blanking period)
3. Gradually reduce SG6 level at this time, while monitoring the output, and measure top SG level when OSD blanking period expires to let the value be V1th.

SOaj1 SUB OSD adjustment control characteristics (at typ.) and
SOaj2 SUB OSD adjustment control characteristics (at min.)

1. The conditions shall be as specified in the electrical characteristics table.
2. Read output amplitude of T.P25 (T.P30 or T.P35) at this time, and let the reading be V_{ORC} (V_{OGC} or V_{OBC}) to let it be Soaj1 or Soaj2.

HBLK retrace line BLK characteristics

1. The conditions shall be as specified in the electrical characteristics table.
2. Monitor output at this time, and read trace line blanking level to let the reading be H_{BLK}.

HVth retrace line BLK input threshold voltage

1. The conditions shall be as specified in the electrical characteristics table.
2. Verify that blanking is performed with a timing in which output is synchronized with SG7. Gradually reduce SG7 level, while monitoring the output, and measure top SG7 level when blanking period expires to let the reading be HVth.

INPUT SIGNAL

SG No.	Signals
SGA	Sine wave with an amplitude of 0.7V_{P-P} 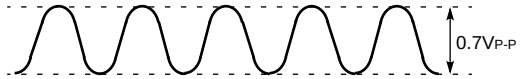
SG1	Sine wave with an amplitude of 0.7V_{P-P} (f = 50MHz)
SG2	Sine wave with an amplitude of 0.7V_{P-P} (f = 180MHz)
SG3	Video signal with an amplitude of 0.7V_{P-P} (f = 1MHz,duty = 50%) Lo section shall be synchronized with SG4 pulse. 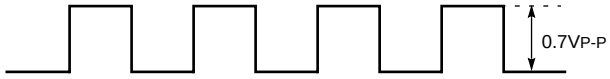
SG4	Pulse with an amplitude of 2.5V_{P-P} and a pulse width of 0.5µs (Pulse width, amplitude and frequency are variable) synchronized with the pedestal section of standard video stage wave 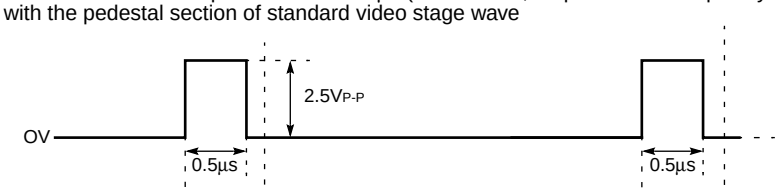
Video stage wave	Video signal with an amplitude of 0.7V_{P-P} (f=30kHz, amplitude is partially variable.) 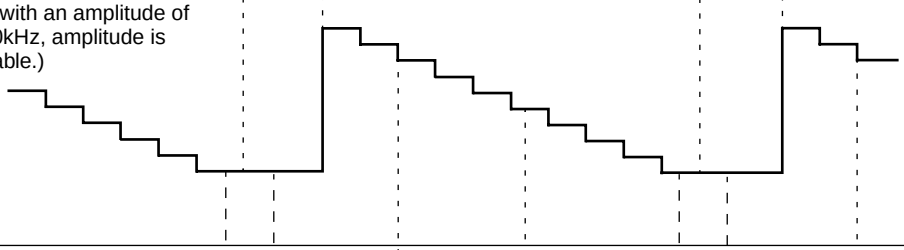
BLK (for OSD) OSD signal	Pulse with an amplitude of 4.0V_{P-P} and a pulse width of 15µs synchronized with the image section of standard video stage wave. (Amplitude is partially variable.) 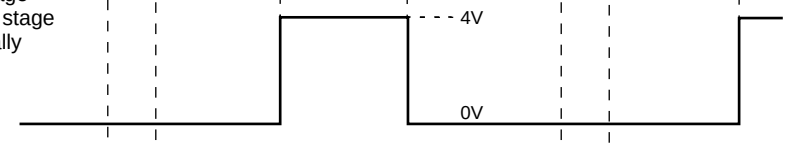
Retrace line BKL signal	Pulse with an amplitude of 4.0V_{P-P} and a pulse width of 15µs synchronized with the image section of standard video stage wave. (Amplitude is partially variable.) 

TEST CIRCUIT

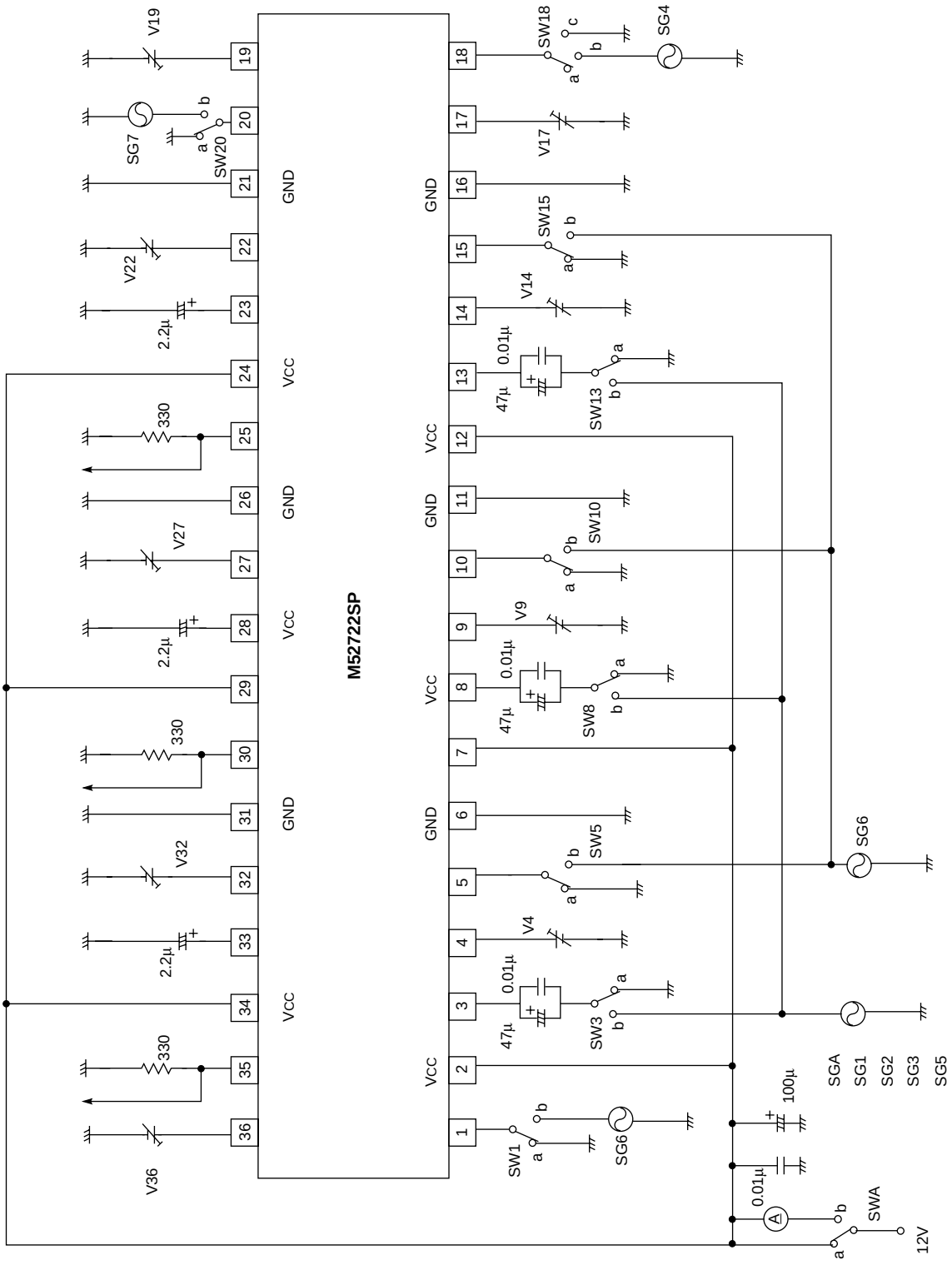

Units Resistance : Ω
Capacitance : F

TYPICAL CHARACTERISTICS

THERMAL DERATING (MAXIMUM RATING)

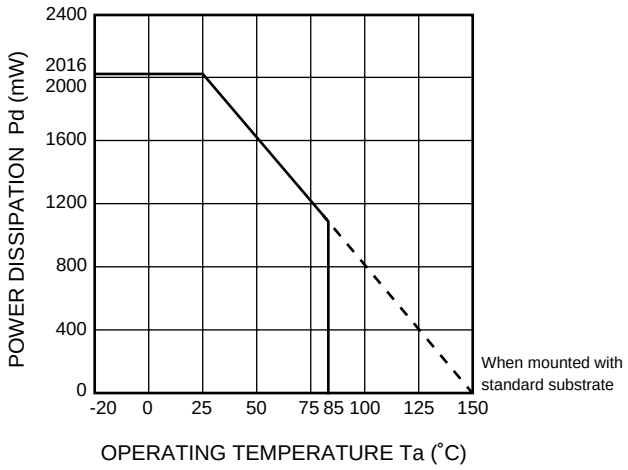

M52722SP

3-CHANNEL VIDEO PREAMPLIFIER PROVIDED WITH OSD MIX AND RETRACE LINE BLK FOR HIGH-RESOLUTION

APPLICATION EXAMPLE

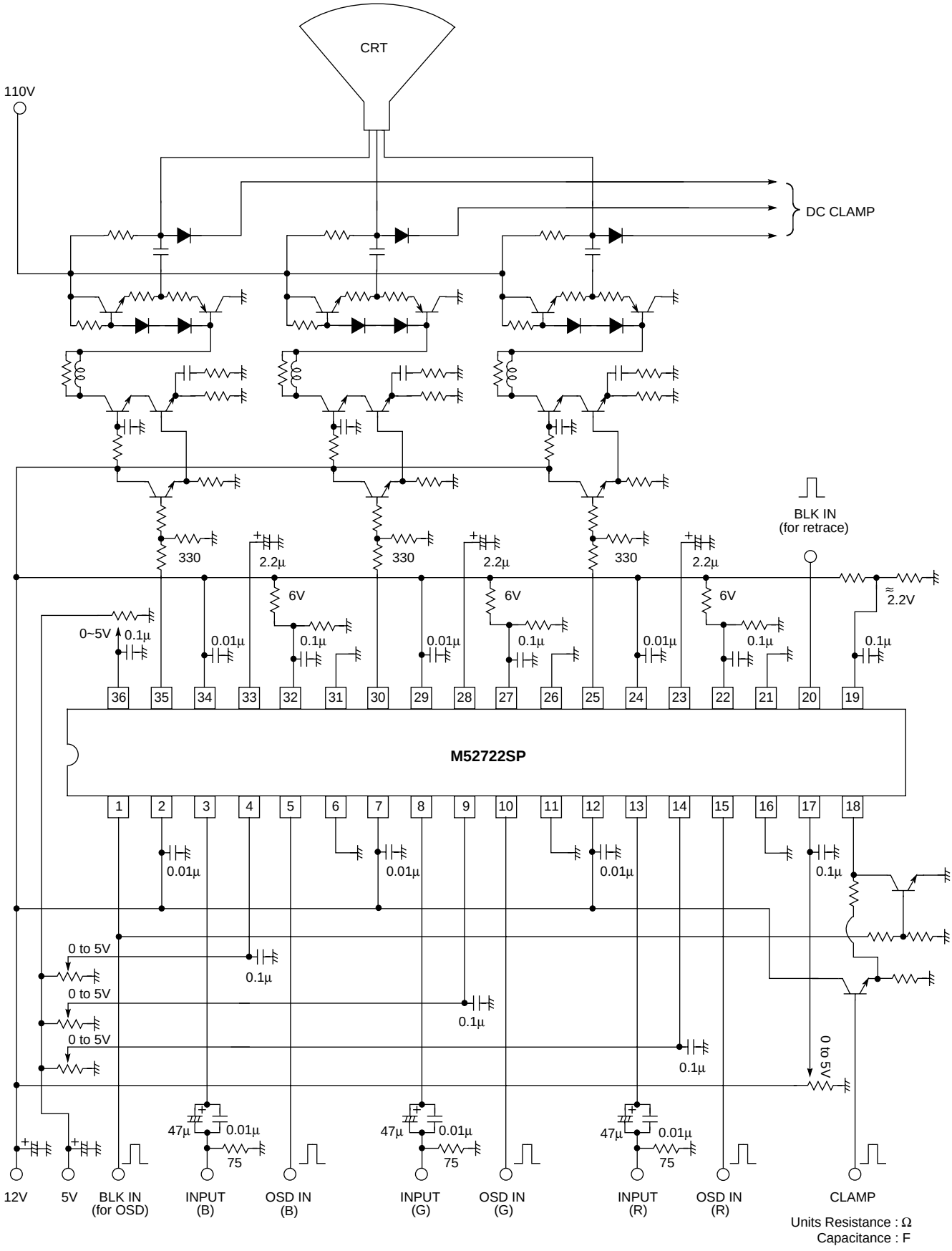

M52722SP

3-CHANNEL VIDEO PREAMPLIFIER PROVIDED WITH OSD MIX AND RETRACE LINE BLK FOR HIGH-RESOLUTION

DESCRIPTION OF PIN

Pin No.	Name	Peripheral circuit of pins	DC voltage	Description of function
①	BLK IN(for OSD)	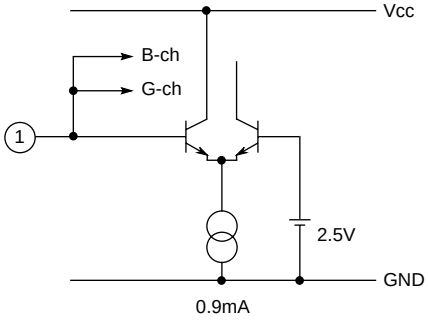	-	• EInput pulse between 3.5V and 5V. 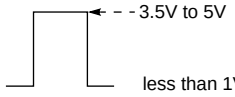 • Ground to GND when not in use.
② ⑦ ⑫	Vcc (B) Vcc (G) Vcc (R)		12	• Apply identical voltage to all 3 channels.
③ ⑧ ⑬	INPUT (B) INPUT (G) INPUT (R)	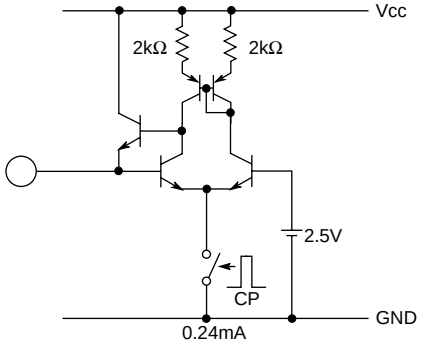	2.5	• Clamped to about 2.5V by clamping pulse at pin 18. Input at a low impedance.
④ ⑨ ⑭	SUB CONTRAST (B) SUB CONTRAST(G) SUB CONTRAST (R)	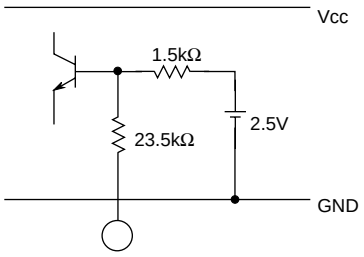	2.5	• Use at less than 5V to ensure stable operation.
⑤ ⑩ ⑮	OSD IN (B) OSD IN (G) OSD IN (R)	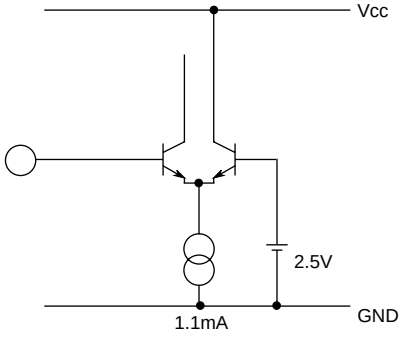	-	• Input pulse between 3.5V and 5V. 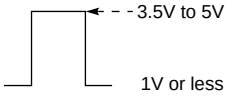 • Ground to GND when not in use.

DESCRIPTION OF PIN (cont.)

Pin No.	Name	Peripheral circuit of pins	DC voltage	Description of function
⑥ ㉛ ⑪ ㉖ ⑯ ㉑	GND (B) GND (G) GND (R)		GND	
⑰	MAIN CONTRAST	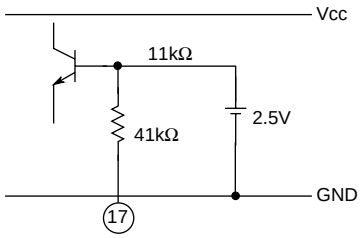	2.5	• Use at less than 5V to ensure stable operation.
⑱	CP IN	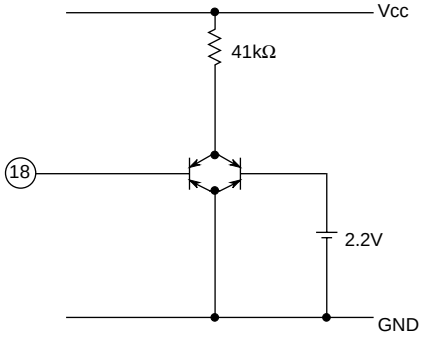	-	• Input more than 2.5V of pulse. 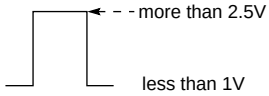 • IInput at a low impedance.
⑲	MAIN BRIGHTNESS	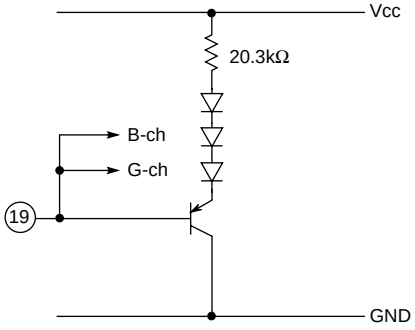	-	
⑳	BLK IN (for retrace)	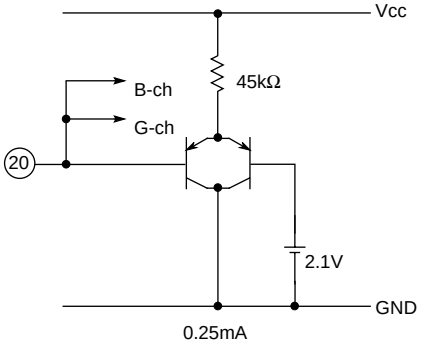	-	• IInput pulse between 2.5V and 5V. 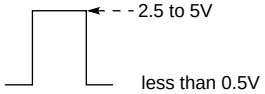 • Ground to GND when not in use.

DESCRIPTION OF PIN (cont.)

Pin No.	Name	Peripheral circuit of pins	DC voltage	Description of function
㉒ ㉗ ㉜	SUB OSD ADJUST (R) SUB OSD ADJUST (G) SUB OSD ADJUST (B)	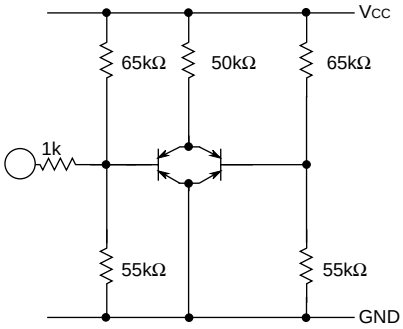	When open 5.5V	• Open or pull up to Vcc when not in use.
㉓ ㉘ ㉝	HOLD (R) HOLD (G) HOLD (B)	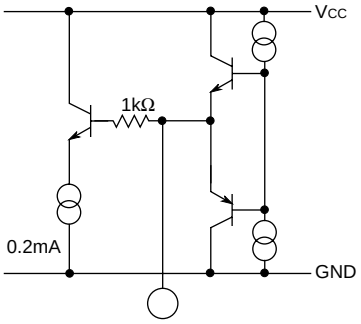	Vari-able.	• Capacitance is required between GNDs.
㉔ ㉙ ㉞	Vcc2 (R) Vcc2 (G) Vcc2 (B)	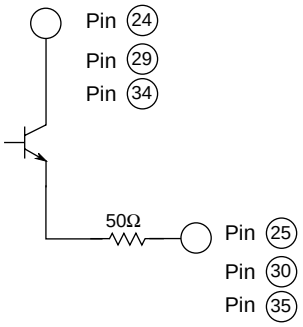	12 Apply	• A power supply dedicated to output emitter follower. Apply identical voltage to all 3 channels.
㉕ ㉚ ㉟	OUTPUT (R) OUTPUT (G) OUTPUT (B)		Vari-able	• Resistor is required on the GND side. Set arbitrarily to provide less than 15mA by drive capability required.
㊱	MAIN OSD ADJUST	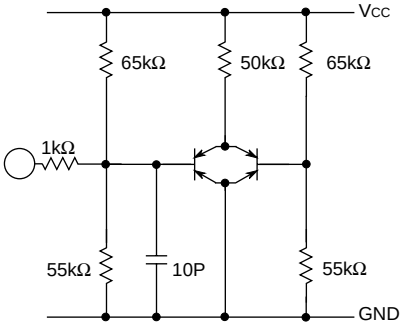	Apply 5.5V	• Open or pull up to Vcc when not in use.

M52722SP - INSTRUCTIONS FOR USE

1) Clamping pulse input

Input positive polarity pulse.

Clamping pulse threshold voltage VTH is calculated by the following equation, and voltages more than 2.2 V is subject toLIM:

VTH = 2.2 V- DiodeX1

= 1.5V

Recommended clamping pulse voltage is as given in the following

diagram:

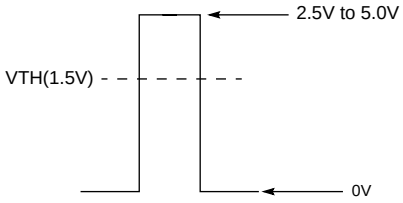

In addition, pulse width is recommended as follows:

More than 1.0µ sec at 15kHz,

More than 0.5µ sec at 30kHz, and

More than 0.3µ sec at 64kHz.

Clamping pulse wiring generally involves long stretched lines in the set, is made from the high pressure side, and often connected indirectly to external pins, causing strong surge input to tend to come into. Under such circumstances, protective circuit as given in the following diagram is recommended:

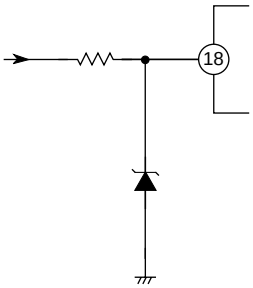

2) Brightness operation

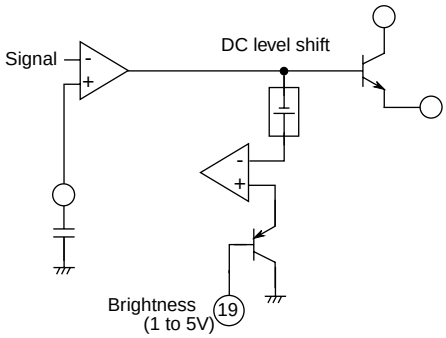

The above diagram represents its principle.

2-1) Brightness pins

Use within the range of 1V to 5V.

Control characteristics are as given in the following drawing:

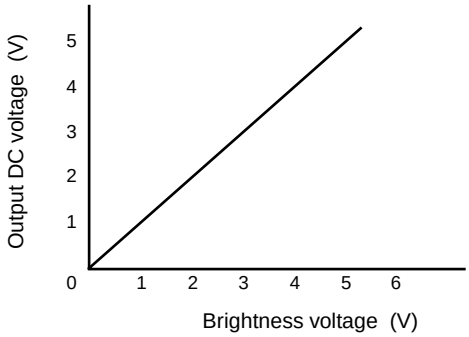

2-2) Sub-brightness

This IC has no sub-brightness function.

2-3) Capacitance value of holding capacitor

Value necessary as IC is more than 0.01É (when fH=15kHz). However, this depends upon hold period (time other than for clamping), and the longer the hold time is, the greater the value is necessary.

In terms of application, the smaller the capacitance value, the quicker the response, and the greater the capacitance value, the more stable the behavior.

Accordingly, set freely depending upon signals and clamping pulse contents (especially pulse status in a vertically synchronized timing).

3) BLK (for OSD) and OSD input pins

- Input formula is on an open basis.

(See page 2-1109.)Threshold voltage is 2.5V.

- Inputting OSD mix signal without inputting BLK pulse will cause abnormal operation. Input BLK pulse as well whenever inputting OSD Mix signal.
- Ensure that input pin is grounded when OSD Mix function is not used.

- OSD display period overlapped with clamping pulse period will cause abnormal operation. As measures against this, external circuit as given in the following diagram is recommended:

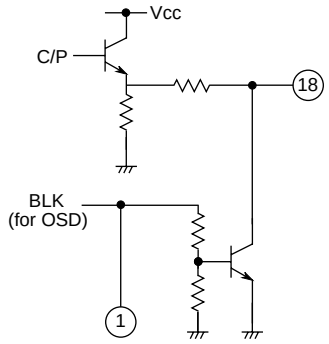

4) Retrace line BLK input pins

- Input formula is open.

(See page 2-1110.)

- Threshold voltage is 1.5V.
- Ensure that input pin is grounded when no retrace line BLK function is used.

5) Main, Sub OSD adjustment pins

- Use within the range of 0V-5V.
- Control characteristics are as given in the following drawing:
- Open if main OSD adjustment or sub OSD adjustment is not used.
- If, in application, wiring on the substrate causes interference wave to get into these pins, affecting even IC input, consider addition of such as bus controller.
- Ensure that main, sub OSD adjustment pins are open or grounded when no OSD Mix function is used.

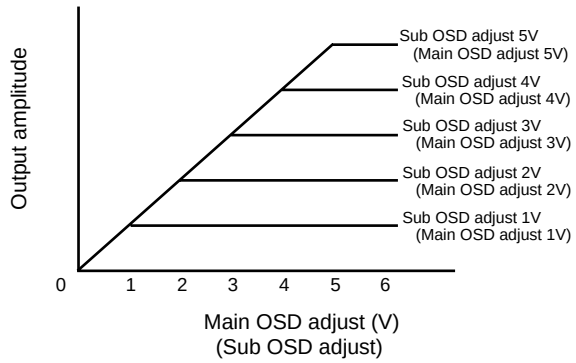

PRECAUTIONS FOR APPLICATION

- Wire output pins to output pulldown resistors at a shortest distance.
- Voltage in the IC output signal pedestal area is recommended for use at about 2V.