Customer Information Sheet

DRAWING No.: M50-311XX42	SHEET 2 OF 2	IF IN DOUBT - ASK	©	NOT TO SCALE	THIRD ANGLE PROJECTION	ALL DIMENSIONS IN mm

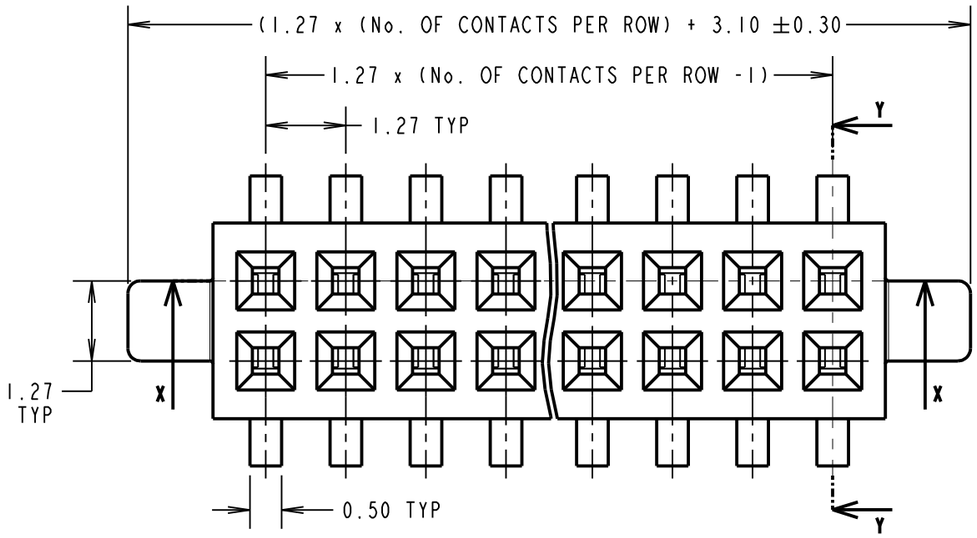

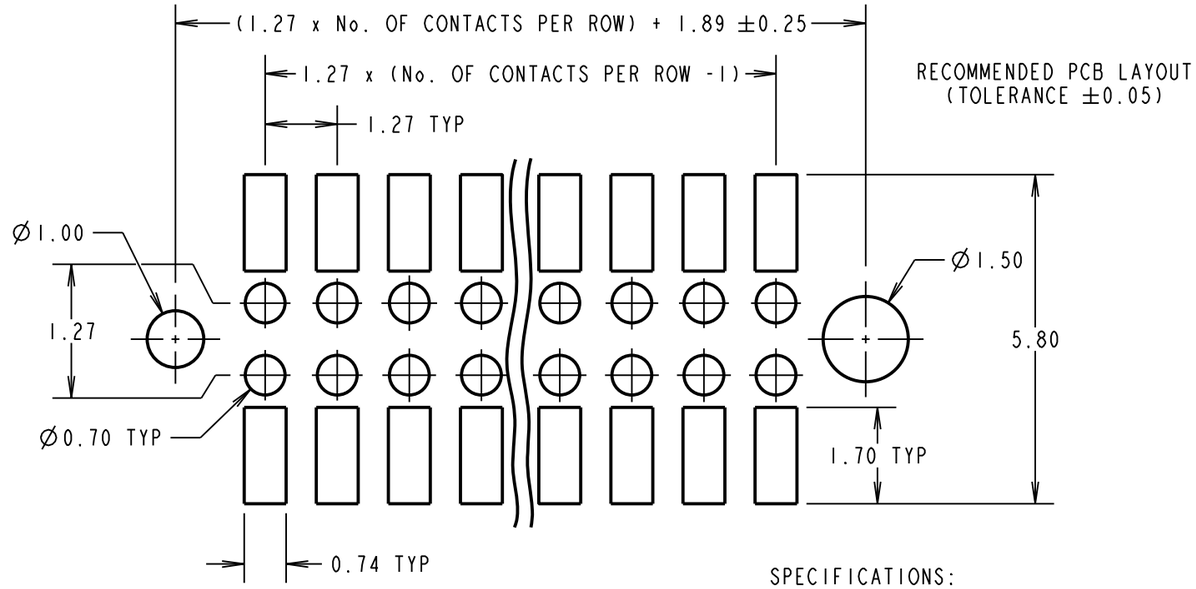

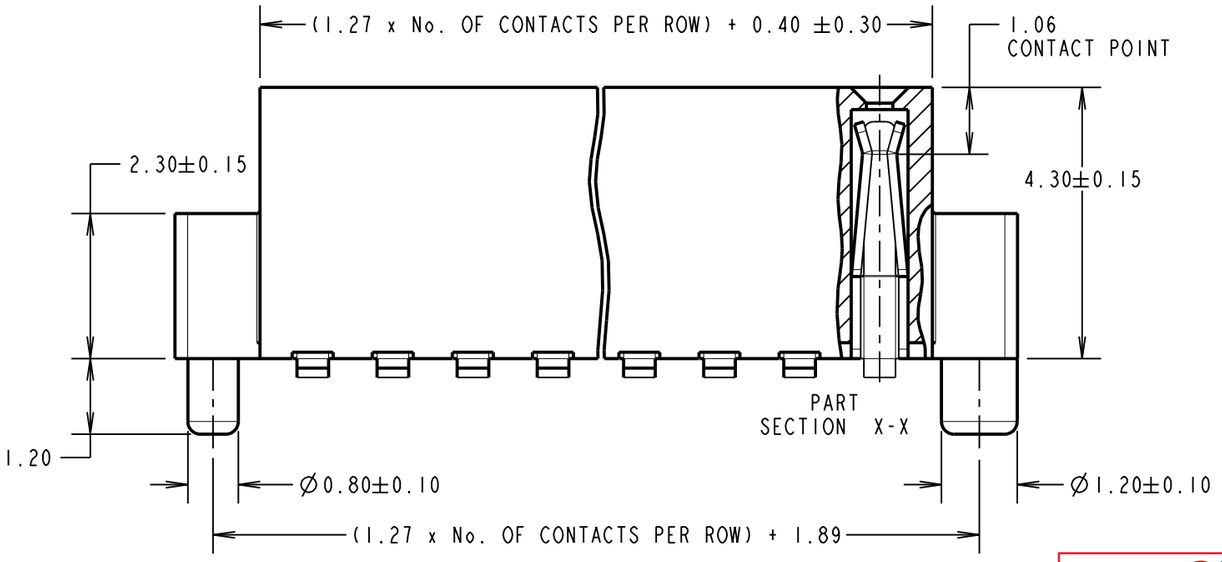

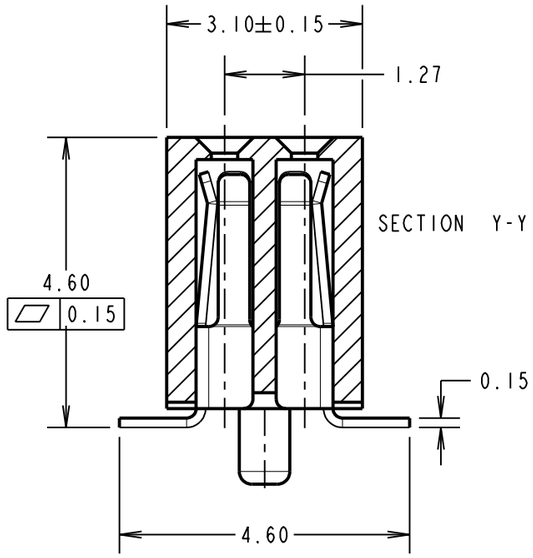

SPECIFICATIONS:
- MATERIAL:
  - MOULDING = PA9T, UL94V-0, BLACK
  - CONTACT = PHOSPHOR BRONZE
- FINISH:
  - CONTACT = NICKEL ALL OVER, GOLD FLASH ON CONTACT AREA, 100% TIN ON TAILS
- ELECTRICAL:
  - CURRENT RATING = 1A
  - VOLTAGE PROOF = 500V AC FOR ONE MINUTE
  - CONTACT RESISTANCE = 20mΩ MAX INITIAL, 30mΩ MAX AFTER CONDITIONING
  - INSULATION RESISTANCE = 1,000MΩ MIN
  - VOLTAGE PROOF = 500V AC/DC
- MECHANICAL:
  - DURABILITY = 300 CYCLES MIN
  - INSERTION FORCE = 0.98N MAX PER CONTACT
  - WITHDRAWAL FORCE = 0.12N MIN PER CONTACT
- ENVIRONMENTAL:
  - OPERATING TEMPERATURE = -40°C TO +105°C
- PACKING:
  - TUBE

FOR COMPLETE SPECIFICATION, SEE COMPONENT SPECIFICATION C029XX (LATEST ISSUE)

SB	9	31.05.16	13323
NAME	ISS.	DATE	C/NOTE
APPROVED:	S.BENNETT		
CHECKED:	M.PERREN		
DRAWN:	S.BENNETT		
CUSTOMER REF.:			
ASSEMBLY DRG:			

OBSOLETE

No. of contacts per row = 16 to 19, 21 to 24, 26 to 29, 31 to 50

Last Time Buy = 15th June 2018

NOTES:
1. ALL TOLERANCES ARE ±0.25 UNLESS OTHERWISE STATED.

ORDER CODE:

M50-311XX42

No. OF CONTACTS PER ROW:
03 to 15, 20, 25, 30

FINISH:
GOLD FLASH ON CONTACTS, 100 %TIN ON TAIL

HARWIN

www.harwin.com
technical@harwin.com

THIS DRAWING AND ANY INFORMATION OR DESCRIPTIVE MATTER SET OUT HEREON ARE CONFIDENTIAL AND COPYRIGHT PROPERTY OF THE HARWIN GROUP AND MUST NOT BE DISCLOSED, LOANED, COPIED OR USED FOR MANUFACTURING, TENDERING OR FOR ANY OTHER PURPOSE WITHOUT THEIR WRITTEN PERMISSION.

TOLERANCES UNLESS STATED:
X. = ±1mm
X.X = ±0.50mm
X.XX = ±0.10mm
X.XXX = ±0.01mm
ANGLES = ±5°

MATERIAL: SEE ABOVE	TITLE: 1.27mm PITCH DIL VERTICAL SMT SOCKET ASSY WITH POSTS	
FINISH: SEE ABOVE	DRAWING NUMBER: M50-311XX42	SHT 2 OF 2
S/AREA: mm²		