# Stepping Motors
# M42SP-7



## OUTLINE

Standard type motor "M42SP-7" which belongs to the outer diameter 42mm model series. Despite 7.5˚of step angle, and excitation method that are all in common with "M42SP-5", its body has been reduced to 15.7mm in thickness. This type is the most suited to any compact electronic apparatuses.




## FEATURES

1. High output torque.
2. Superior running quietness and stability.
3. Step angle : 7.5˚.
4. Excellent responsiveness acquired.

## USES

Printers, typewriters, word processors, facsimiles, and such.

## SPECIFICATIONS

| tems | M42SP-7 | |
|---|---|---|
| Rated Voltage | DC 12V | DC 24V |
| Working Voltage | DC 10.8~13.2V | DC 21.6~26.4V |
| Rated Current/Phase | 259mA | 173mA |
| No. of Phase | 4 Phase | 4 Phase |
| Coil DC Resistance | 50Ω/phase±7% | 150Ω/phase±7% |
| Step Angle | 7.5˚/step | 7.5˚/step |
| Excitation Method | 2-2 Phase excitation (Unipolar driving) | |
| Insulation Class | Class E insulation | Class E insulation |
| Holding Torque | 49.0mN·m | 52.9mN·m |
| Pull-out Torque | 23.5mN·m/200pps | 33.3mN·m/200pps |
| Pull-in Torque | 19.6mN·m/200pps | 29.4mN·m/200pps |
| Max. Pull-out Pulse Rate | 600pps | 650pps |
| Max. Pull-in Pulse Rate | 420pps | 430pps |

## CHARACTERISTICS

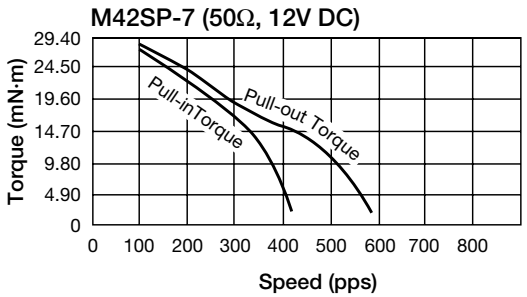


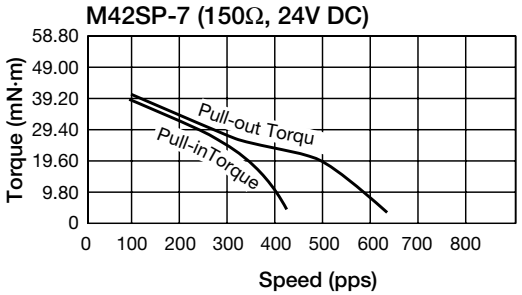


## DIMENSIONS

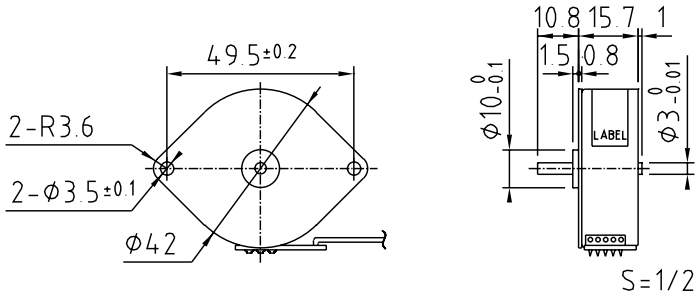


Unit : mm, General tolerance : ±0.5