Customer Information Sheet

DRAWING No.: M40-310XX45R	IF IN DOUBT - ASK	©	NOT TO SCALE	THIRD ANGLE PROJECTION	ALL DIMENSIONS IN mm

SPECIFICATIONS:
- MATERIAL:
  - MOULDING = GLASS FILLED PA9T, UL94V-0, BLACK
  - CONTACT = PHOSPHOR BRONZE
- FINISH:
  - GOLD FLASH OVER NICKEL
- ELECTRICAL:
  - CURRENT RATING = 1A
  - INSULATION RESISTANCE = 5,000 MEGOHMS MIN.
  - CONTACT RESISTANCE = 20 MILLIOHMS MAX.
  - VOLTAGE PROOF = 1000V AC
- MECHANICAL:
  - INSERTION FORCE = 1.5N MAX
  - WITHDRAWAL FORCE = 0.1N MIN.
  - DURABILITY = 300 CYCLES
- ENVIRONMENTAL:
  - OPERATING TEMPERATURE = -40°C TO +105°C

FOR COMPLETE MECHANICAL/ELECTRICAL SPECIFICATION, SEE COMPONENT SPECIFICATION C026XX (LATEST ISSUE)

NOTES:
1. FOR REELING DETAILS, SEE SHEET 4.
2. CAP REMOVED FROM MAIN VIEWS FOR CLARITY, PART COMES FITTED WITH CAP. SEE SHEET 4 FOR CAP DETAILS.

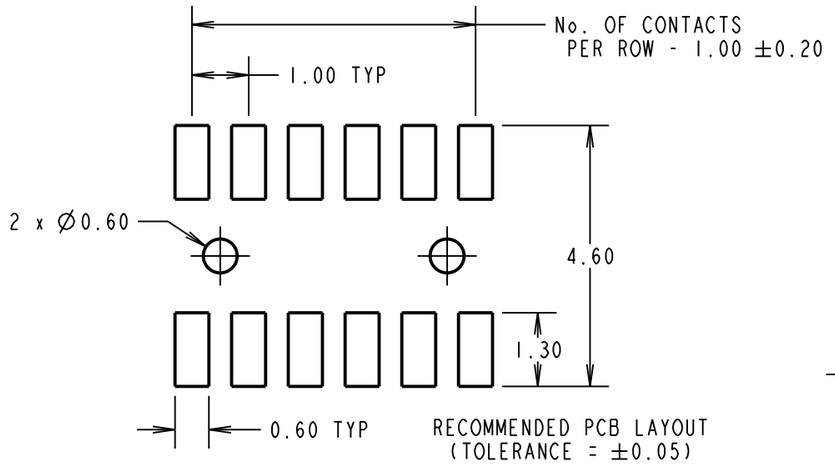

ORDER CODE:
M40-310XX45R
No. OF CONTACTS PER ROW:
03,04,05,06,08,10,20,25

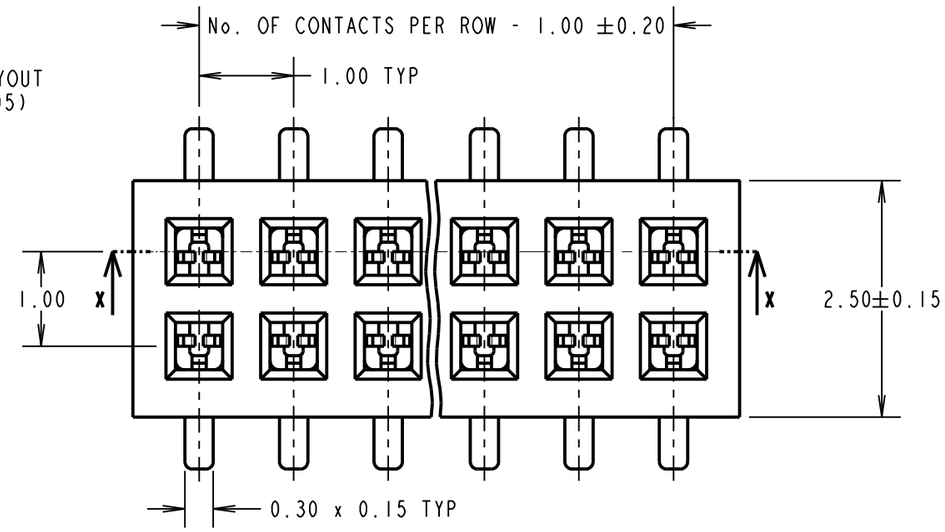

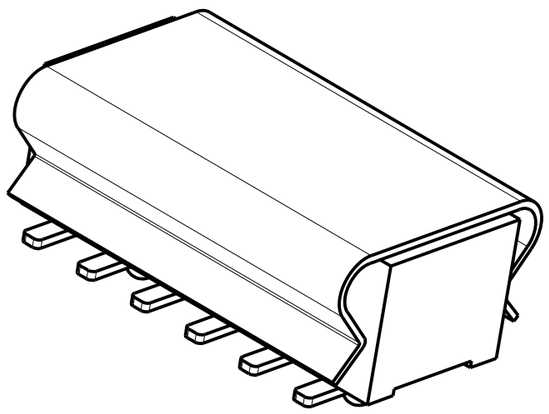

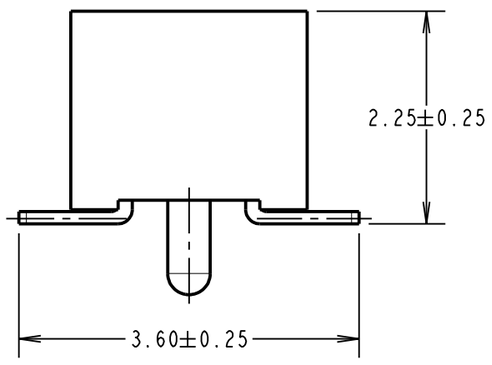

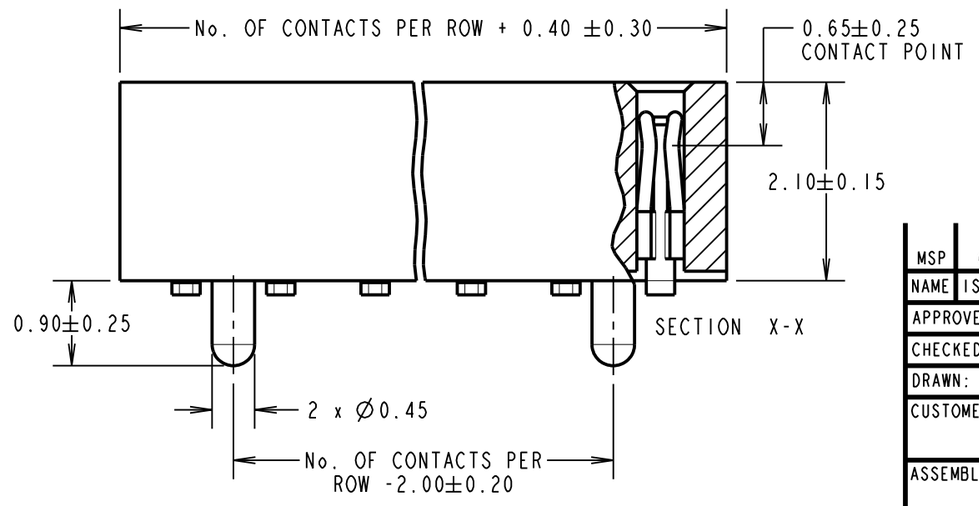

MSP	6	14.08.17	20547
NAME	ISS.	DATE	C/NOTE
APPROVED:	M.PERREN		
CHECKED:	S.BENNETT		
DRAWN:	R.ADDE		
CUSTOMER REF.:			
ASSEMBLY DRG:			

HARWIN
www.harwin.com
technical@harwin.com

THIS DRAWING AND ANY INFORMATION OR DESCRIPTIVE MATTER SET OUT HEREON ARE CONFIDENTIAL AND COPYRIGHT PROPERTY OF THE HARWIN GROUP AND MUST NOT BE DISCLOSED, LOANED, COPIED OR USED FOR MANUFACTURING, TENDERING OR FOR ANY OTHER PURPOSE WITHOUT THEIR WRITTEN PERMISSION.

TOLERANCES
X. = ±1mm
X.X = ±0.25mm
X.XX = ±0.10mm
X.XXX = ±0.01mm
ANGLES = ±5°
UNLESS STATED

MATERIAL: SEE ABOVE
FINISH: SEE ABOVE
S/AREA: mm²

TITLE: 1mm PITCH DIL SMT SKT ASSEMBLY (T & R) WITH P & P CAP

DRAWING NUMBER: M40-310XX45R

SHT 3 OF 4

Customer Information Sheet

DRAWING No.: M40-310XX45R	SHEET 4 OF 4	IF IN DOUBT - ASK	©	NOT TO SCALE	THIRD ANGLE PROJECTION	ALL DIMENSIONS IN mm

3,5,6,8 & 10 CONTACT STYLE

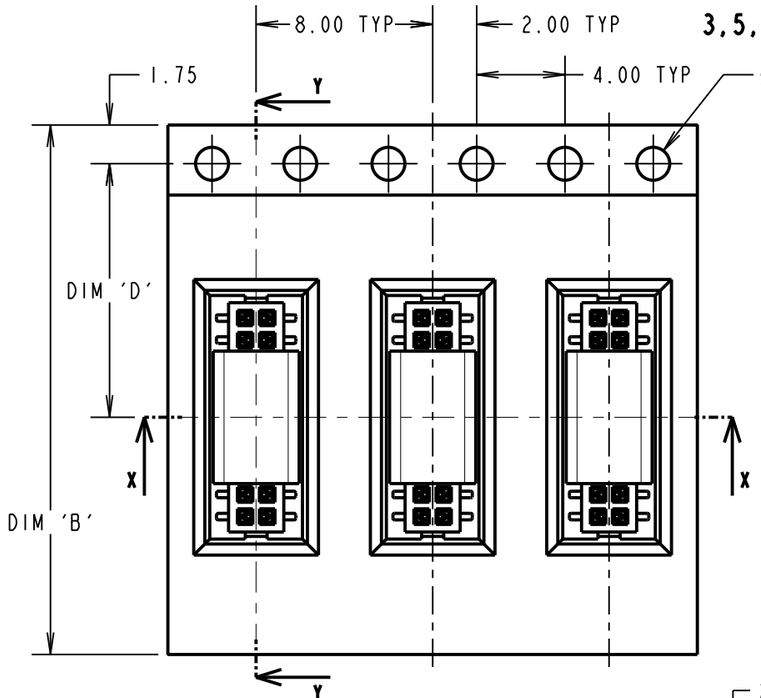

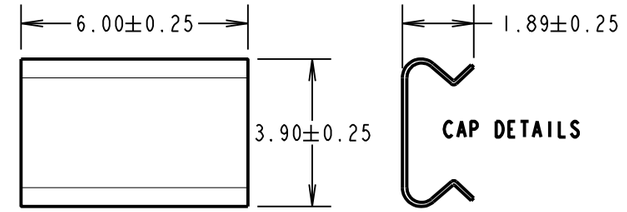

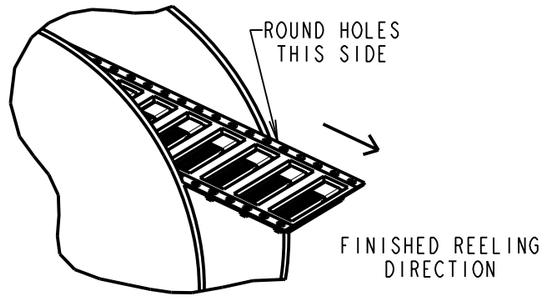

REEL DETAILS

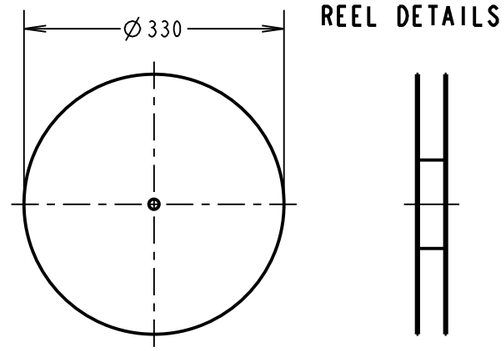

PART NUMBER	DIM 'A'	DIM 'B'	DIM 'C'	DIM 'D'
M40-3100345R	6.30	16.00±0.30		7.50±0.15
M40-3100445R	6.30			
M40-3100545R	6.30			
M40-3100645R	6.90			
M40-3100845R	8.80	24.00±0.30		11.50±0.15
M40-3101045R	10.80			
M40-3102045R	20.80	32.00±0.30	28.40	14.20±0.15
M40-3102545R	25.80	44.00±0.30	40.40	20.20±0.15

20 & 25 CONTACT STYLE

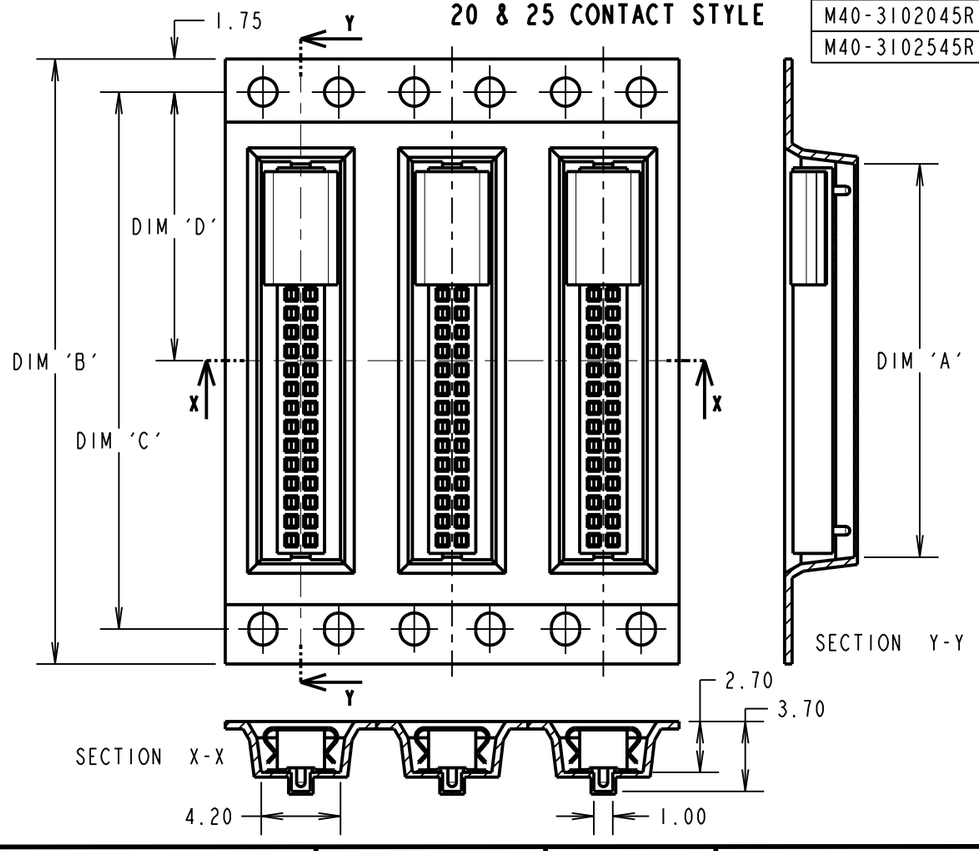

4 CONTACT STYLE

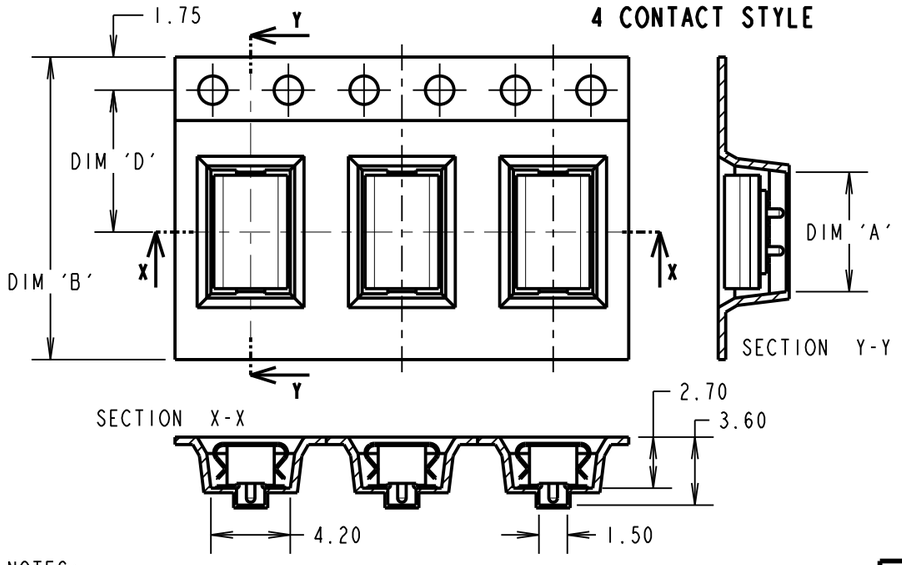

ORDER CODE:

M40-310XX45R

No. OF CONTACTS PER ROW:
03,04,05,06,08,10,20,25

MSP	6	14.08.17	20547
NAME	ISS.	DATE	C/NOTE

APPROVED:

CHECKED:

DRAWN: R.ADDE

CUSTOMER REF.:

ASSEMBLY DRG:

NOTES:
1. FOR CONNECTOR DIMENSIONS, SEE SHEET 3.
2. TAPE & REEL IS IN GENERAL ACCORDANCE WITH EIA-481 (ELECTRONIC INDUSTRIES ASSOCIATION).
3. PICK & PLACE CAP IS THE SAME FOR ALL SIZES.
4. QUANTITY PER REEL FOR ALL SIZES = 2000.
5. TAPE THICKNESS = 0.40mm.

HARWiN

www.harwin.com
technical@harwin.com

THIS DRAWING AND ANY INFORMATION OR DESCRIPTIVE MATTER SET OUT HEREON ARE CONFIDENTIAL AND COPYRIGHT PROPERTY OF THE HARWIN GROUP AND MUST NOT BE DISCLOSED, LOANED, COPIED OR USED FOR MANUFACTURING, TENDERING OR FOR ANY OTHER PURPOSE WITHOUT THEIR WRITTEN PERMISSION.

SEE SHEET 3

TOLERANCES
X. = ±1mm
X.X = ±0.25mm
X.XX = ±0.10mm
X.XXX = ±0.01mm
ANGLES = ±5°
UNLESS STATED

MATERIAL: SEE SHEET 3

FINISH: SEE SHEET 3

S/AREA: mm²

TITLE: 1mm PITCH DIL SMT SKT ASSEMBLY (T & R) WITH P & P CAP

DRAWING NUMBER: M40-310XX45R

SHT 4 OF 4