HYBRID-HIGH RELIABILITY RADIATION HARDENED DC-DC CONVERTER

+28V Input, Single/Dual Output

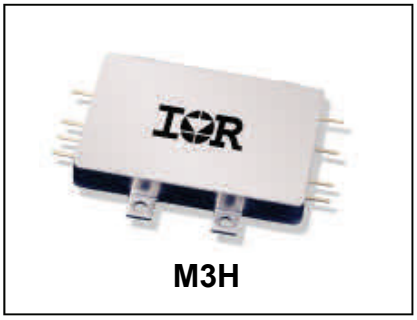

M3H

Description

The M3H-Series of DC-DC converters are radiation tolerant, high reliability devices designed for moderate radiation environments such as those encountered by low earth orbit satellites and launch vehicles. For higher radiation environments, the M3G-Series of DC-DC converters is recommended. System upgrades to higher radiation tolerance applications can be easily accommodated with the M3G-Series converters because they have the same mechanical outline and are pin compatible. For physically smaller, lower output power single and dual output applications the M3L-Series of DC-DC converters are recommended. Features of the M3H-Series include up to 40 watt output power, small size, low weight and a high tolerance to total ionizing dose, single event effects and environmental stresses such as temperature extremes, mechanical shock, and vibration. All components are fully de-rated to meet the requirements of MIL-STD-975 and MIL-STD-1547. Extensive documentation including Radiation Susceptibility, Thermal Analysis, Stress Analysis and MTBF are available.

The converters incorporate a fixed frequency single forward topology with magnetic feedback and an internal EMI filter. These converters are capable of meeting the conducted emissions and conducted susceptibility requirements of MIL-STD-461C without any additional components. All models include an external inhibit port and have an adjustable output voltage. They are enclosed in a hermetic 3.0" x 2.5" x 0.445" steel package and weigh less than 125 grams. The package utilizes rugged ceramic feed-through copper core pins and is sealed using parallel seam welding.

Manufactured in a facility fully qualified to MIL-PRF-38534, these converters are fabricated utilizing DLA Land and Maritime qualified processes. For available screening options, refer to device screening table in the data sheet.

Non-flight versions of the M3H-Series converters are available for system development purposes. Variations in electrical specifications and screening to meet custom requirements can be accommodated. Consult IR HiRel San Jose for special requirements.

Features

- Total Dose > 25 kRads(Si)
- SEE Hardened to LET up to 37 MeV.cm^2/mg
- Internal EMI filter; Converter Capable of meeting MIL-STD-461C CE03 and CS01
- Low Weight < 125 grams
- Magnetically Coupled Feedback
- 18V to 50V Input Range (50V, 70V, and 120V Models Available)
- Up to 40W Output Power
- Single and Dual Output Models Include 3.3, 5, 5.2, 12, 15, ±5, ±12, ±15V
- High Efficiency - to 82%
- -55°C to +125°C Operating Temperature Range
- 100MΩ @ 500VDC Isolation
- Under-Voltage Lockout
- Short Circuit and Overload Protection
- Adjustable Output Voltage
- External Inhibit
- 1,500,000 Hour MTBF

Applications

- Low Earth Orbit Satellites (LEO)
- Launch Vehicles

Circuit Description

The M3H-Series converters utilize a single forward topology with resonant reset. The nominal switching frequency is 500kHz. Electrical isolation and tight output regulation are achieved through the use of a magnetically coupled feedback. Voltage feed-forward provides high line rejection.

An internal EMI filter allows the converter to meet the conducted emissions requirements of MIL-STD-461C on the input power leads. A two-stage output filter reduces the typical output ripple to less than 20mV peak-to-peak.

Output current is limited under any load fault condition to approximately 125% of rated. An overload condition causes the converter output to behave like a constant current source with the output voltage dropping below nominal. The converter will resume normal operation when the load current is reduced below the current limit point. This protects the converter from both overload and short circuit conditions. The current limit point exhibits a slightly negative temperature coefficient to reduce the possibility of thermal runaway.

An under-voltage lockout circuit prohibits the converter from operating when the line voltage is too low to maintain the output voltage. The converter will not start until the line voltage rises to approximately 17 volts and will shut down when the input voltage drops below 16 volts. The one volt of hysteresis reduces the possibility of line noise interfering with the converter's start-up and shut down.

An external inhibit port is provided to control converter operation. The converter's operation is inhibited when this pin is pulled low. It is intended to be driven by an open collector logic device. The pin may be left open for normal operation and has a nominal open circuit voltage of 10.5V with respect to the input return (pin 2).

Single output models feature remote sense to automatically correct for voltage drops between the converter output anf the load. The output voltage of dual output models can be adjusted using a single external resistor.

Design Methodology

The M3H-Series was developed using a proven conservative design methodology which includes selecting radiation tolerant and established reliability components and fully de-rating to the requirements of MIL-STD-975 and MIL-STD-1547. Heavy de-rating of the power MOSFET gate and drain voltages minimize the possibility of SEGR and SEB. A magnetic feedback circuit is utilized instead of opto-couplers to minimize temperature, radiation and aging sensitivity. PSPICE was used extensively to predict and optimize circuit performance for both beginning and end-of-life. Thorough design analyses include Radiation Susceptibility (TREE), Stress, Thermal, and Reliability (MTBF).

Specifications

Absolute Maximum Ratings		**Recommended Operating Conditions**	
Input Voltage range	-0.5V_{DC} to +60V_{DC}	Input Voltage range	+18V_{DC} to +60V_{DC}
Output power	Internally limited	Input Voltage range[1]	+18V_{DC} to +38V_{DC}
Lead Temperature	+300°C for 10 seconds	Output power	0 to Max. Rated
Operating temperature	-55°C to +135°C	Operating temperature[2]	-55°C to +125°C
Storage temperature	-55°C to +135°C	Operating temperature[1]	-55°C to +70°C

[1] Meets de-rating per MIL-STD-975
[2] For operation at +125°C see table Note 13

Electrical Performance Characteristics

Parameter	**Group A Subgroup**	**Conditions** **-55°C ≤ T_C ≤ +85°C** **V_{IN} = 28V DC ± 5%, C_L = 0** **unless otherwise specified**	**Limits**			**Unit**
			Min	**Nom**	**Max**	
Input Voltage			18	28	40	V
Output Voltage (V_{OUT})						V
M3H2803R3S	1	I_{OUT} = 100% rated load Note 4	3.27	3.30	3.33	
M3H2805S	1		4.95	5.00	5.05	
M3H2805R2S	1		5.17	5.20	5.23	
M3H2812S	1		11.88	12.00	12.12	
M3H2815S	1		14.85	15.00	15.15	
M3H2805D	1		±4.95	±5.00	±5.05	
M3H2812D	1		±11.88	±12.00	±12.12	
M3H2815D	1		±14.85	±15.00	±15.15	
M3H2803R3S	2,3	I_{OUT} = 100% rated load Note 4	3.23		3.37	
M3H2805S	2,3		4.90		5.10	
M3H2805R2S	2,3		5.13		5.27	
M3H2812S	2,3		11.76		12.24	
M3H2815S	2,3		14.70		15.30	
M3H2805D	2,3		±4.90		±5.10	
M3H2812D	2,3		±11.76		±12.24	
M3H2815D	2,3		±14.70		±15.30	
Output power (P_{OUT})						W
M3H2803R3S	1,2,3	V_{IN} = 18, 28, 40 Volts, Note 2	0		30	
All Others			0		40	
Output current (I_{OUT})						A
M3H2803R3S	1,2,3	V_{IN} = 18, 28, 40 Volts, Note 2	0		9.10	
M3H2805S			0		8.00	
M3H2805R2S			0		7.70	
M3H2812S			0		3.34	
M3H2815S			0		2.67	
M3H2805D		Either Output, Note 3	0		6.40	
M3H2812D		Either Output, Note 3	0		2.67	
M3H2815D		Either Output, Note 3	0		2.14	
Line regulation (VR_{LINE})	1,2,3	V_{IN} = 18, 28, 40 Volts I_{OUT} = 0, 50%, 100% rated, Note 4	-0.5		0.5	%
Load regulation (VR_{LOAD})	1,2,3	I_{OUT} = 0, 50%, 100% rated, Note 4 V_{IN} = 18, 28, 40 Volts	-1.0		1.0	%

For Notes to Electrical Performance Characteristics, refer to page 5

Electrical Performance Characteristics (continued)

Parameter	Group A Subgroup	Conditions $-55°C \le T_C \le +85°C$ V_{IN} = 28V DC ± 5%, C_L = 0 unless otherwise specified	Limits			Unit
			Min	Nom	Max	
Cross regulation (VR_{CROSS}) M3H2805D M3H2812D M3H2815D	1,2,3	Duals only, Note 5 V_{IN} = 18, 28, 40 Volts	 -5.0 -3.0 -3.0		 5.0 3.0 3.0	%
Output Ripple (V_{RIP}) M3H2803R3S M3H2805S M3H2805R2S M3H2812S M3H2815S M3H2805D M3H2812D M3H2815D	1,2,3	V_{IN} = 18, 28, 40 Volts I_{OUT} = 100% rated load Notes 4, 6			 35 50 50 70 80 80 80 80	mVp-p
Input current, no load (I_{IN}) M3H2803R3S M3H2805S M3H2805R2S M3H2812S M3H2815S M3H2805D M3H2812D M3H2815D	1,2,3	I_{OUT} = 0, Pin 4 open			 60 70 70 70 70 70 100 100	mA
Input current inhibited	1,2,3	Pin 4 shorted to pin 2			8.0	mA
Switching frequency (F_S)	1,2,3		450	500	550	kHz
Efficiency (E_{FF}) M3H2803R3S M3H2805S M3H2805R2S M3H2812S M3H2815S M3H2805D M3H2812D M3H2815D	1,2,3	I_{OUT} = 100% rated load Note 4	 68 76 77 78 78 77 78 78	 73 80 80 81 82 80 81 82		%
Enable Input (Inhibit Function) open circuit voltage drive current (sink) voltage range	1,2,3	Note 1	 9.5 -0.5		 11.5 500 50	 V µA V
Current Limit Point Expressed as a percentage of full rated load current	1,2,3	V_{OUT} = 90% of Nominal, Note 4	105		130	%
Power dissipation, load fault (P_D) M3H2815D All others	1,2,3	Short Circuit, Overload, Note 8			 22 18	W
Output response to step load changes (V_{TLD})	4,5,6	Half Load to/from Full Load, Notes 4, 9	-300		300	mVpk

For Notes to Electrical Performance Characteristics, refer to page 5

Electrical Performance Characteristics (continued)

Parameter	Group A Subgroup	Conditions $-55°C \le T_C \le +85°C$ V_{IN} = 28V DC ± 5%, C_L = 0 unless otherwise specified	Limits			Unit
			Min	Nom	Max	
Recovery time, step load changes (T_{TLD})	4,5,6	Half Load to/from Full Load, Notes 4,9,10			200	µs
Output response to step line changes (V_{TLN})	4,5,6	18V to/from 40V I_{OUT} = 100% rated load, Notes 1,4,11	-300		300	mVpk
Recovery time, step line changes (T_{TLN})	4,5,6	18V to/from 40V I_{OUT} = 100% rated load, Notes 1,4,10,11			200	µs
Turn-on Response Overshoot (V_{OS}) Turn-on Delay (T_{DLY})	4,5,6	No Load, Full Load for Dual Notes 4,12	2.0		 10 10	 % ms
Overshoot (V_{OS}) Turn-on Delay (T_{DLY})	4,5,6	20 % Load, Full Load for Single Notes 4,12	2.0		10 10	% ms
Capacitive Load (C_L) M3H2803R3S M3H2805S M3H2005R2S M3H2812S M3H2815S M3H2805D M3H2812D M3H2815D	1	I_{OUT} = 100% rated load No effect on DC performance Notes 1, 4, 7 Each output on duals			 2200 1000 1000 180 120 500 90 60	µF
Line Rejection	1	I_{OUT} = 100% rated load DC to 50kHz, Notes 1, 4	40	50		dB
Isolation	1	Input to Output or Any Pin to Case except pin 3, test @ 500V_{DC}	100			MΩ
Device Weight					125	g
MTBF		MIL-HDBK-217F2, SF, 35°C	1.5×10^6			Hr

Notes: Electrical Performance Characteristics Table

1. Parameter is tested as part of design characterization or after design changes. Thereafter, parameter shall be guaranteed to the limits specified.
2. Parameter verified during line and load regulation tests.
3. Output load current must be distributed such that at least 20% of the total load current is being provided by one of the outputs.
4. Load current split equally between outputs on dual output models.
5. Cross regulation is measured with 20% rated load on output under test while changing the load on the other output from 20% to 80% of rated.
6. Guaranteed for a D.C. to 20 MHz bandwidth. Tested using a 20 kHz to 10 MHz bandwidth using the circuit shown below.
7. Capacitive load may be any value from 0 to the maximum limit without compromising dc performance. A capacitive load in excess of the maximum limit may interfere with the proper operation of the converter's overload protection, causing erratic behavior during turn-on.
8. Overload power dissipation is defined as the device power dissipation with the load set such that V_{OUT} = 90% of nominal.
9. Load step transition time ≤ 10 µs.
10. Recovery time is measured from the initiation of the transient to where V_{OUT} has returned to within ±1% of its steady state value
11. Line step transition time ≤ 100 µs.
12. Turn-on delay time from either a step application of input power or a logic low to a logic high transition on the inhibit pin (pin 4) to the point where V_{OUT} = 90% of nominal.
13. For operation at temperatures between +85°C and +125°C, de-rate the maximum output power linearly from 100% to 75%.

Circuit for Measuring Output Ripple Voltage

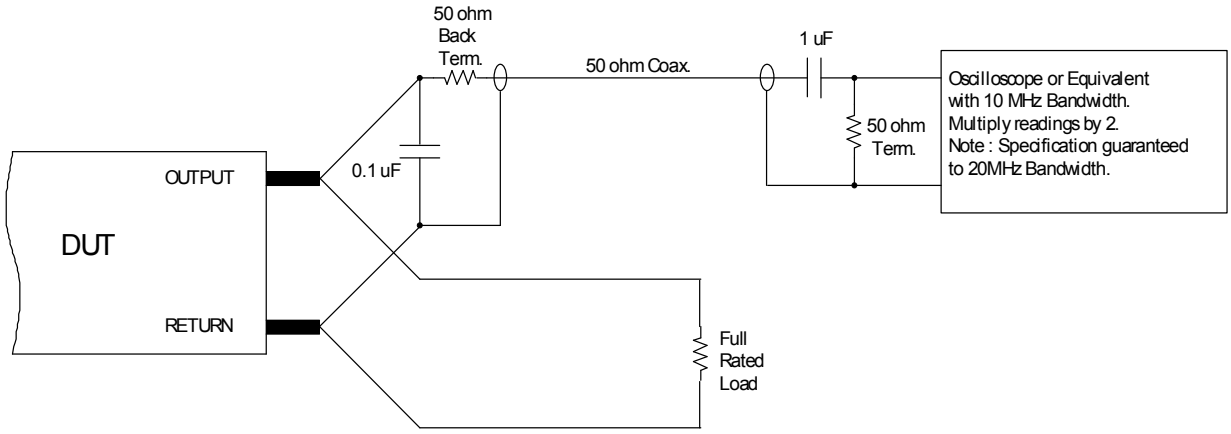

Radiation Performance Characteristics

Test	Conditions	Min	Typ	Highest Level Tested	Unit
Total Ionizing Dose (Gamma)	MIL-STD-883, Method 1019 Operating bias applied during exposure, Full Rated Load, V_{IN} = 28V	25	40	60	kRads(Si)
Single Event Effects SEU, SEL, SEGR, SEB	Heavy ions (LET) Operating bias applied during exposure, Full Rated Load, V_{IN} = 28V	37	82	82	MeV•cm^2/mg
Dose Rate (Gamma Dot) Temporary Saturation Survival	MIL-STD-883, Method 1023 Operating bias applied during exposure, Full Rated Load, V_{IN} = 28V	1E8 1E10		1.5E9	Rads (Si)/sec
Neutron Fluence	MIL-STD-883, Method 1017	3E12		8E12	Neutrons/cm^2
Proton Fluence	E > 10MeV	TBD		N/A	Protons/cm^2

IR HiRel currently does not have does not have a DLA Land and Maritime certified Radiation Hardness Assurance Program.

Figure 1. Block Diagram - Single Output

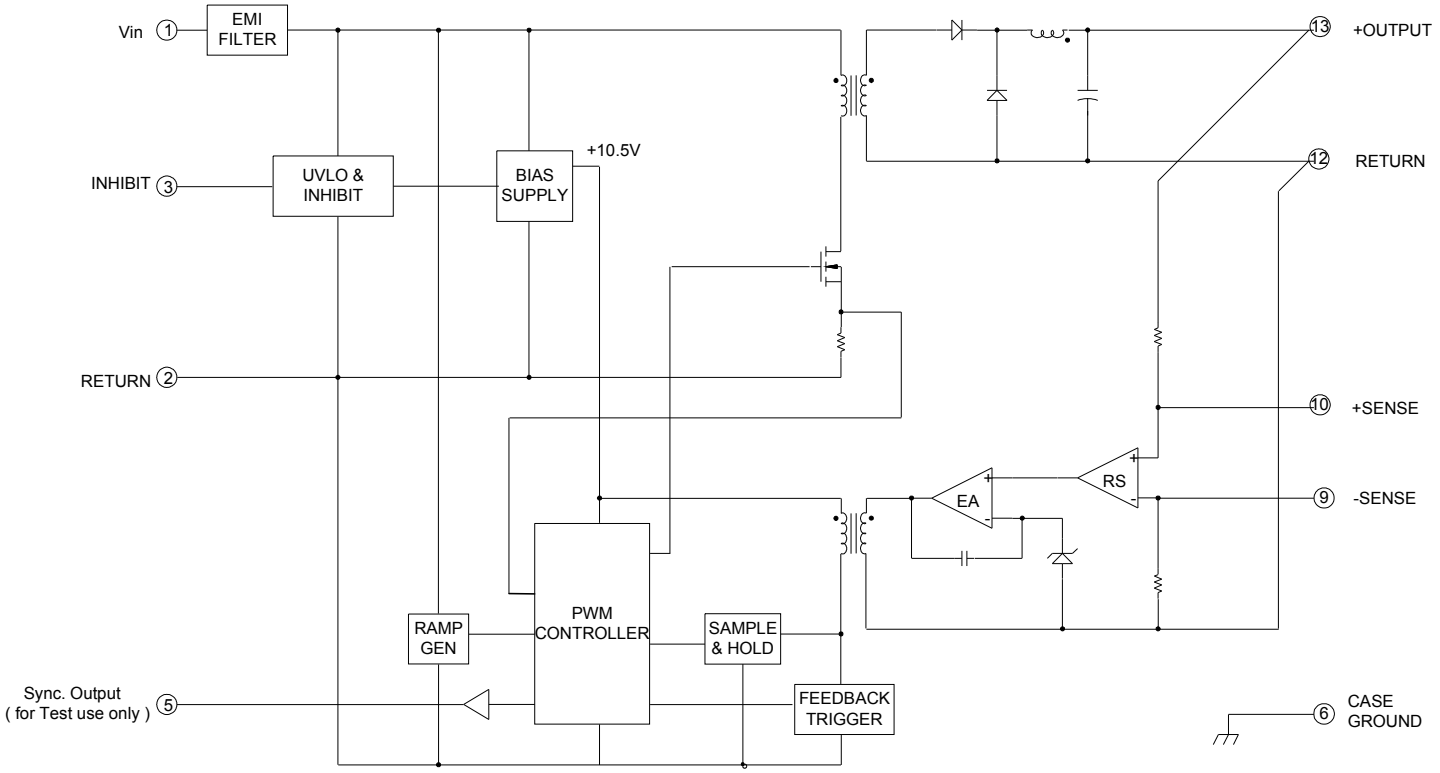

Figure 2. Block Diagram - Dual Output

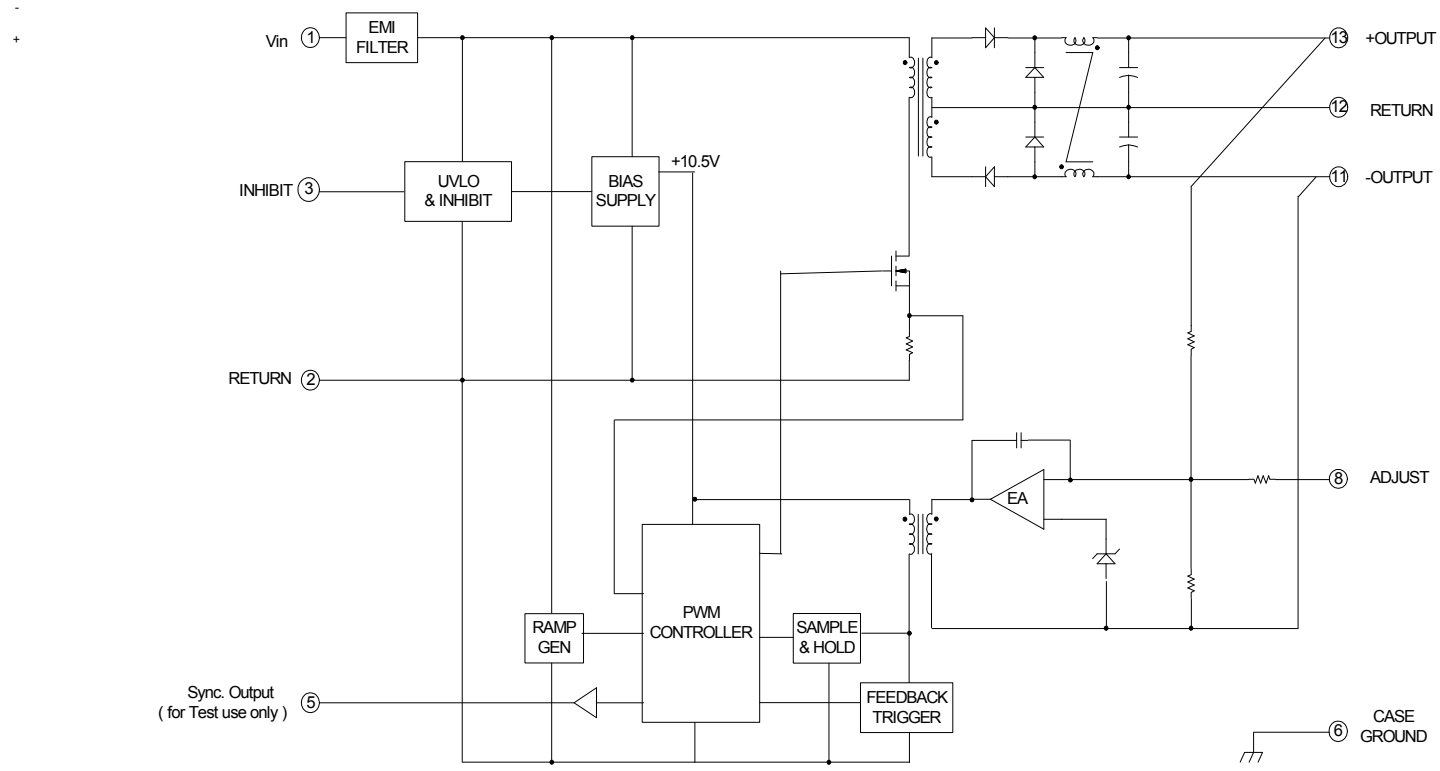

Figure 3. Conducted Emmissions, Common Mode

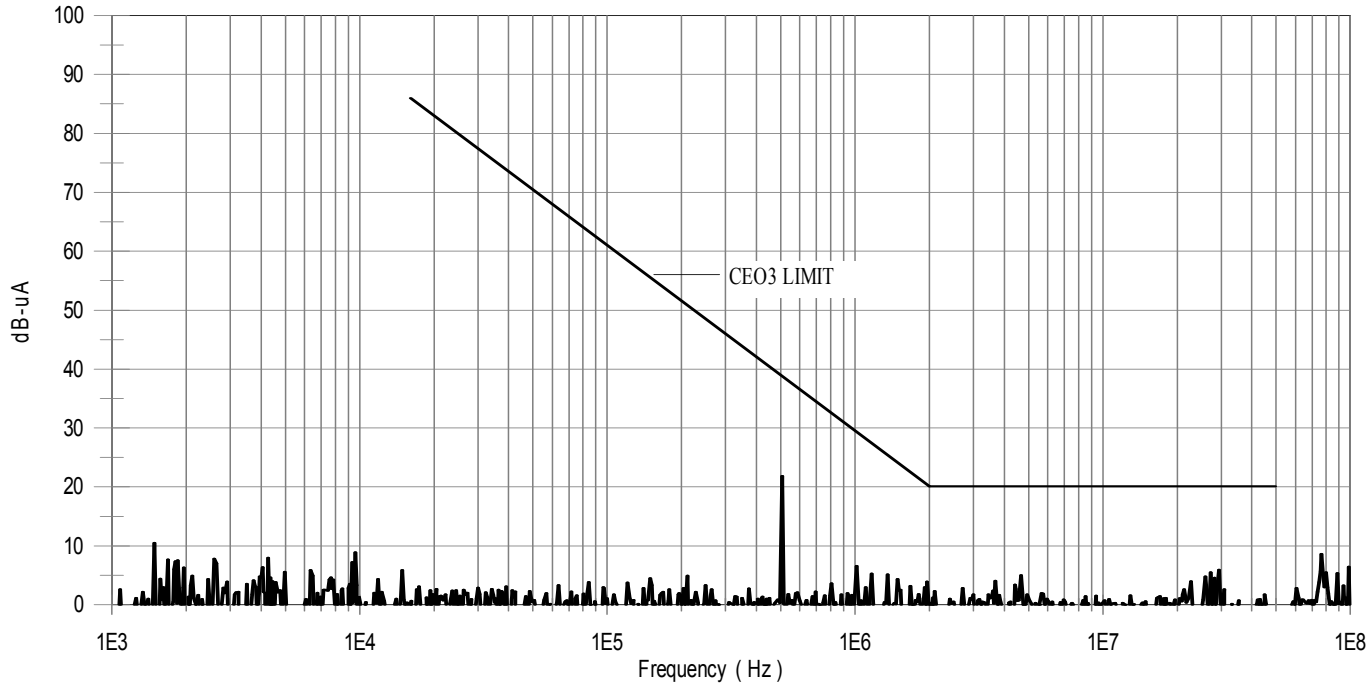

Figure 4. Conducted Emmissions, Normal Mode

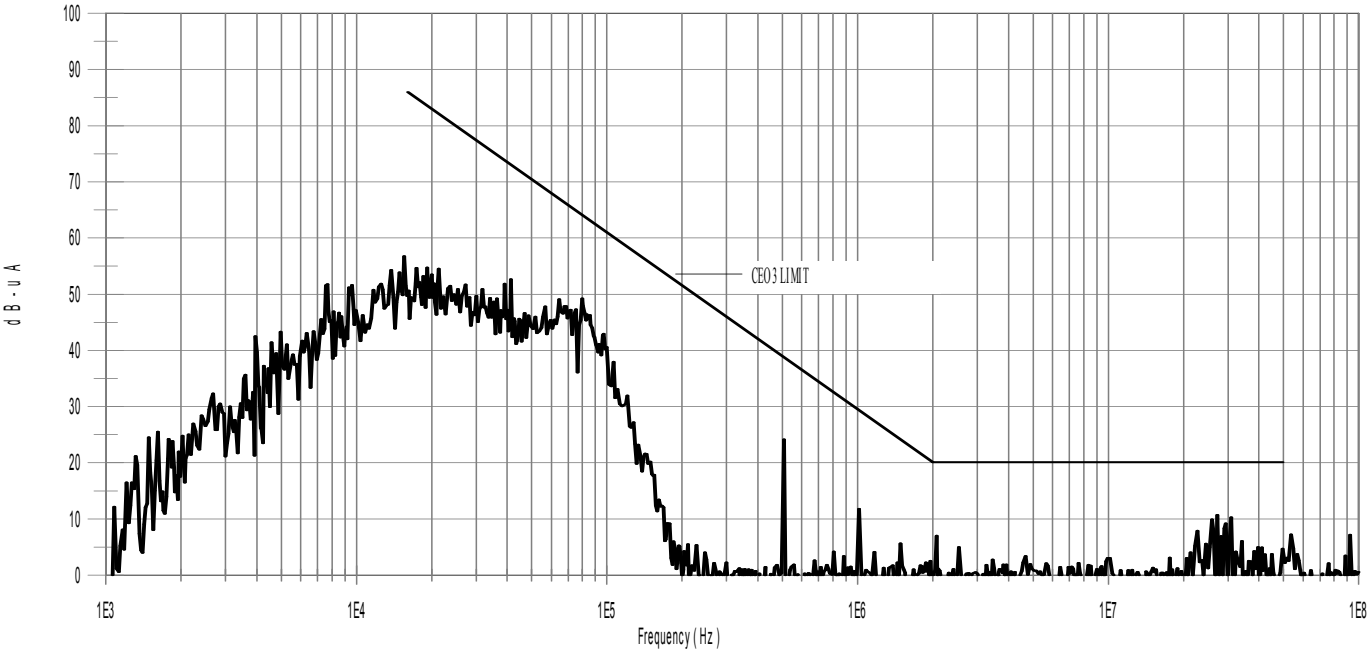

Figure 5. Line Rejections, 28Vdc + 8Vac-p

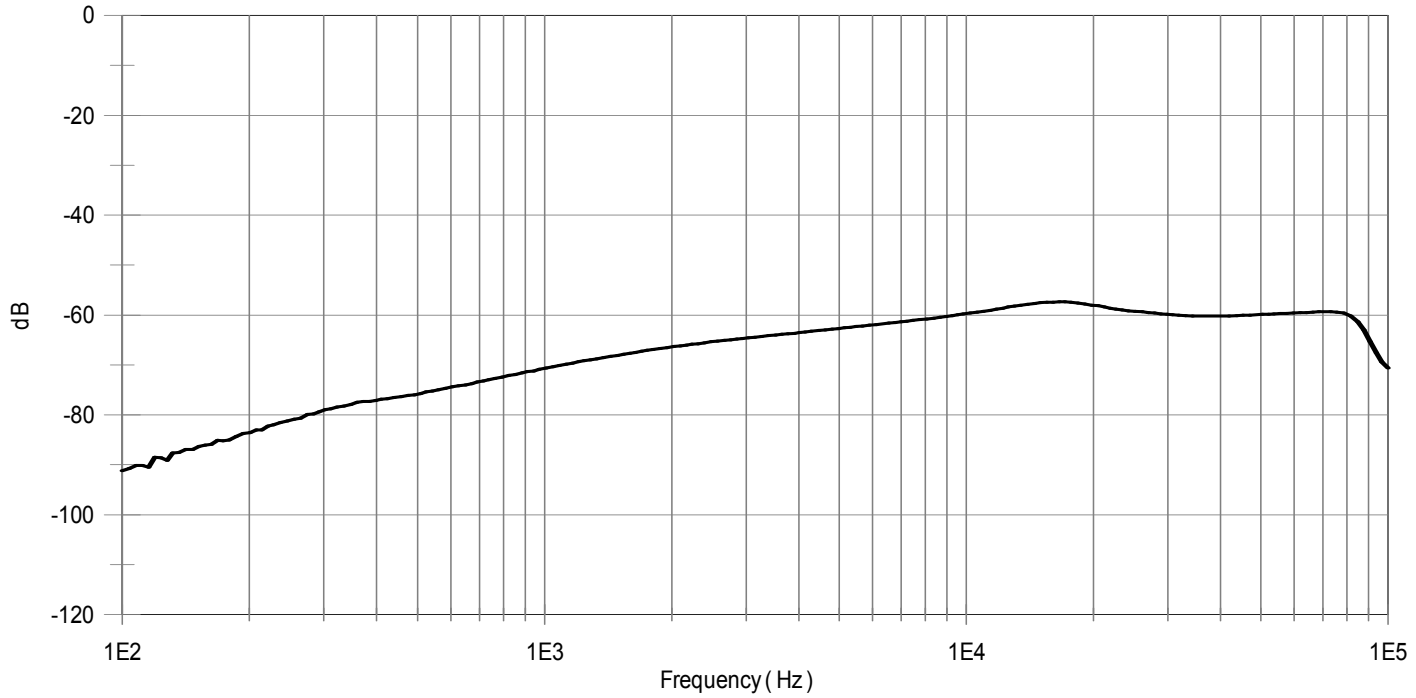

Mechanical Outline

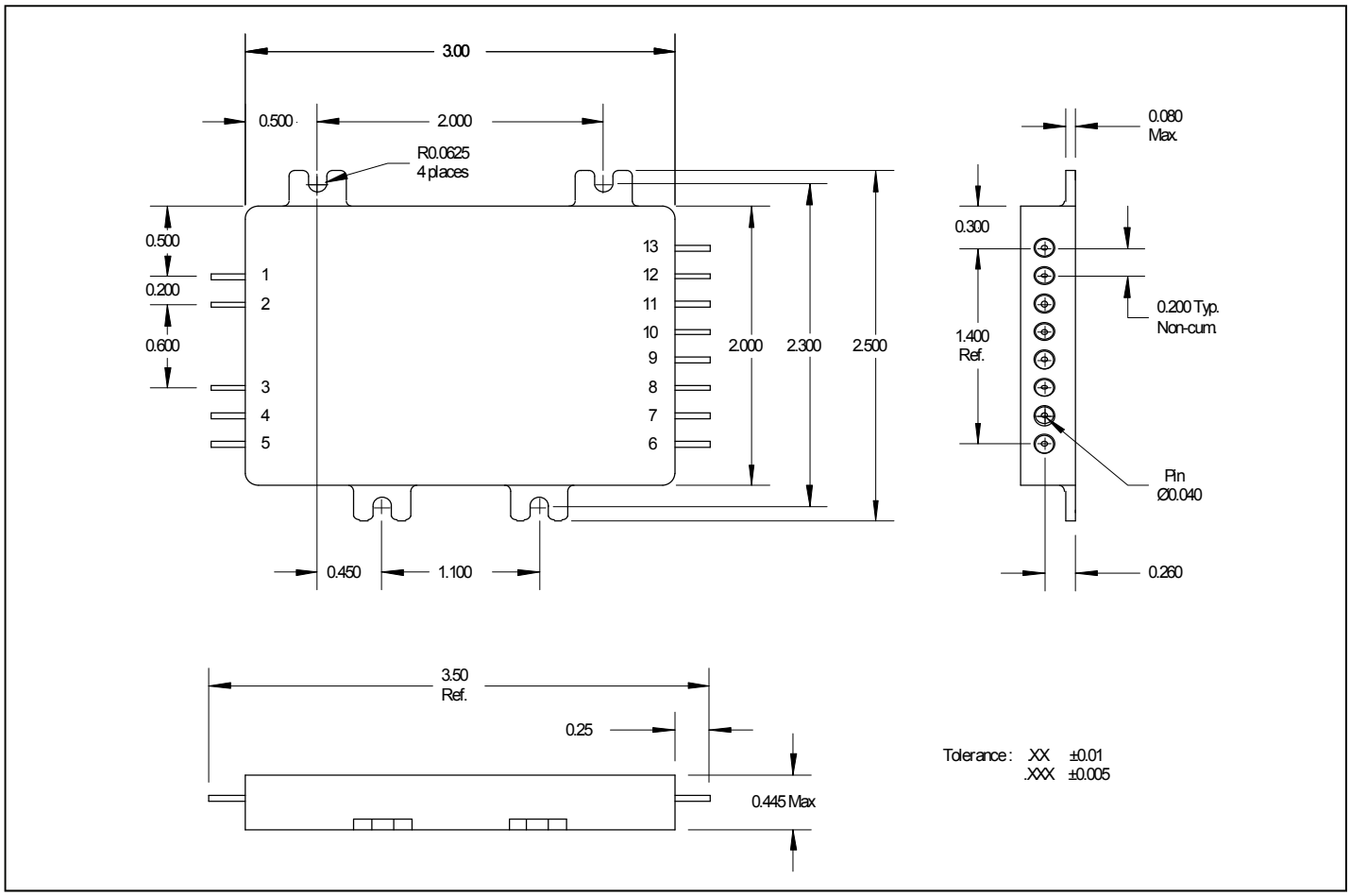

Pin Designation (Single/Dual)

Pin #	Designation	Pin #	Designation
1	+ Input	1	+ Input
2	Input Return	2	Input Return
3	Inhibit	3	Inhibit
4	NC	4	NC
5	Sync. Output (T.P.)	5	Sync. Output (T.P.)
6	Case Ground	6	Case Ground
7	NC	7	NC
8	NC	8	Adjust
9	- Sense	9	NC
10	+ Sense	10	NC
11	NC	11	- Output
12	Output Return	12	Output Return
13	+ Output	13	+ Output

Device Screening

Requirement	MIL-STD-883 Method	No Suffix	EM ②
Temperature Range	—	-55°C to +85°C	-55°C to +85°C
Element Evaluation	MIL-PRF-38534	Class H w/SEM	N/A
Non-Destructive Bond Pull	2023	Yes	N/A
Internal Visual	2017	Yes	①
Temperature Cycle	1010	Cond C	Cond C
Constant Acceleration	2001, Y1 Axis	3000 Gs	3000 Gs
PIND	2020	N/A	N/A
Burn-In	1015	160 hrs @ 125°C	48 hrs @ 125°C
Final Electrical (Group A)	MIL-PRF-38534 & Specification	-55°C, +25°C, +85°C	-55°C, +25°C, +85°C
PDA	MIL-PRF-38534	2%	N/A
Seal, Fine and Gross	1014	A1, C	Cond A
Radiographic	2012	N/A	N/A
External Visual	2009	Yes	①

Notes:
① Best commercial practice.
② Any Engineering Model (EM) build with the "EM" Suffix shall only be form, fit and functional equivalent to its Flight Model (FM) counterpart, and it may not meet the radiation performance. The EM Model shall not be expected comply with MIL-PRF-38534 flight quality/workmanship standards, and configuration control. An EM build may use electrical equivalent commercial grade components. IR HiRel will provide a list of non-compliance items upon request.

Part Numbering

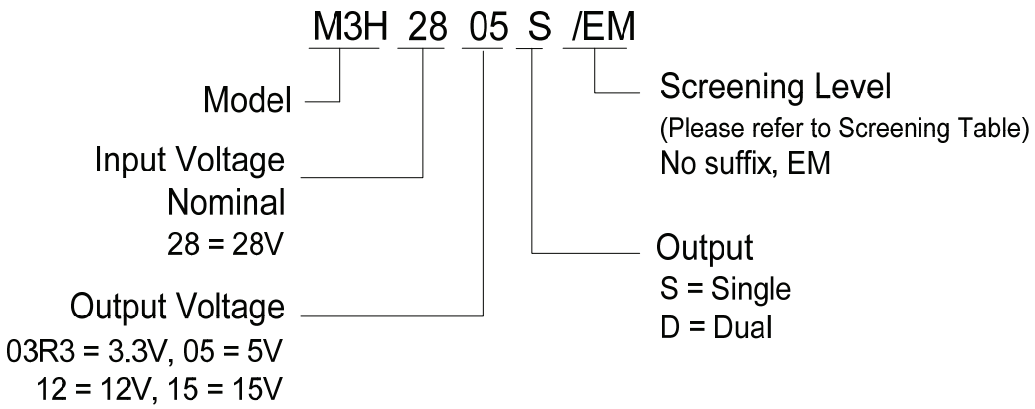

IR HiRel
An Infineon Technologies Company

IR HiRel Headquarters: 101 N. Sepulveda Blvd., El Segundo, California 90245, USA Tel: (310) 252-7105
IR HiRel Leominster: 205 Crawford St., Leominster, Massachusetts 01453, USA Tel: (978) 534-5776
IR HiRel San Jose: 2520 Junction Avenue, San Jose, California 95134, USA Tel: (408) 434-5000
Data and specifications subject to change without notice.

IMPORTANT NOTICE

The information given in this document shall be in no event regarded as guarantee of conditions or characteristic. The data contained herein is a characterization of the component based on internal standards and is intended to demonstrate and provide guidance for typical part performance. It will require further evaluation, qualification and analysis to determine suitability in the application environment to confirm compliance to your system requirements.

With respect to any example hints or any typical values stated herein and/or any information regarding the application of the product, Infineon Technologies hereby disclaims any and all warranties and liabilities of any kind including without limitation warranties on non- infringement of intellectual property rights and any third party.

In addition, any information given in this document is subject to customer's compliance with its obligations stated in this document and any applicable legal requirements, norms and standards concerning customer's product and any use of the product of Infineon Technologies in customer's applications.

The data contained in this document is exclusively intended for technically trained staff. It is the responsibility of any customer's technical departments to evaluate the suitability of the product for the intended applications and the completeness of the product information given in this document with respect to applications.

For further information on the product, technology, delivery terms and conditions and prices, please contact your local sales representative or go to (www.infineon.com/hirel).

WARNING

Due to technical requirements products may contain dangerous substances. For information on the types in question, please contact your nearest Infineon Technologies office.