SHEET 1 OF 1

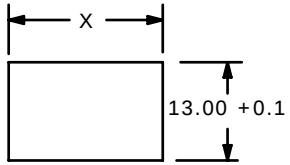

RECOMMENDED PANEL MOUNTING

PANEL THICKNESS	X
0.75-1.25	19.2
1.25-2.00	19.4
2.00-3.00	19.8

SWITCH FUNCTION		
POS. 1	POS. 2	POS. 3
ON	NONE	OFF
1a-1	OPEN	OPEN

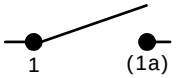

CIRCUIT: SPST

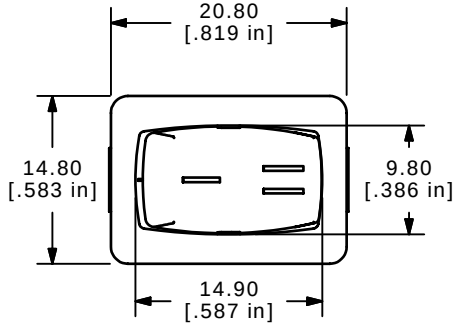

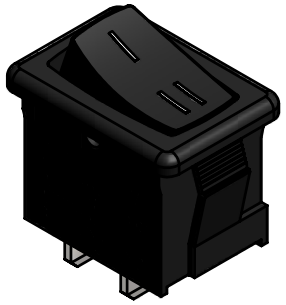

ISOMETRIC

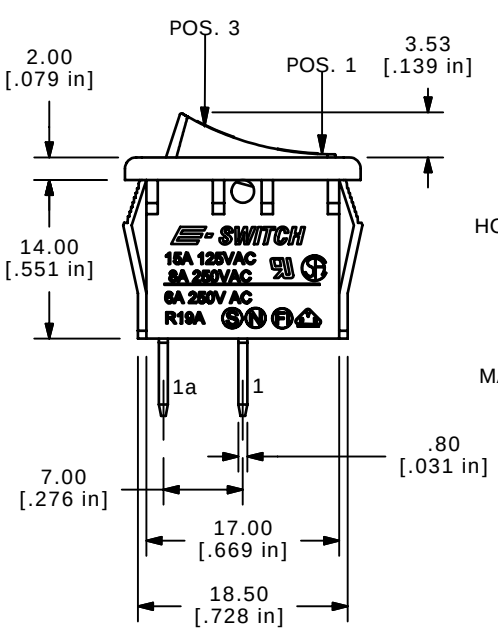

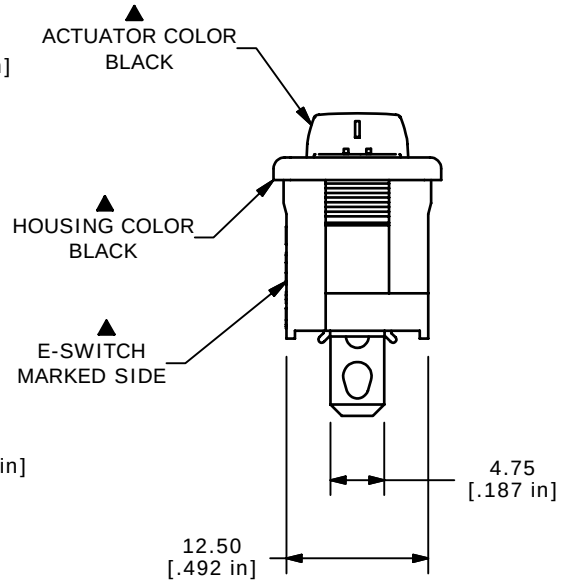

NOTES:
1. ALL DIMENSIONS IN MM [INCH]
2. GENERAL TOLERANCE: X.X=±0.4
   X.XX=±0.25
3. TERM. NOS. FOR REF. ONLY
4. RATING: 15A @125VAC;
   8A @250VAC.
▲5. LAMP VOLTAGE: NO LAMP
6. MATERIAL:
   CONTACT SURFACE: COIN SILVER, SILVER PLATED.
   TERMINAL: COPPER ALLOY w/SILVER PLATE
7. ELECTRICAL LIFE: 10,000 CYCLES
8. CONTACT RESISTANCE: <20 MILLI-OHMS INITIAL
9. DIELECTRIC STRENGTH: >1,500V AC 1 MIN
10. ▲DENOTES CRITICAL PARAMETER.

REV	PCR NO	DESCRIPTION	DATE	BY
A	14891	RELESED FOR PRODUCTION	5/5/05	JB

THE INFORMATION CONTAINED IN THIS DOCUMENT IS PROPRIETARY TO E-SWITCH AND IS NOT TO BE COPIED OR TRANSFERRED

E-SWITCH®

TITLE R1966ABLKBLKDF

SCALE	DATE	DR	DWG	REV
1.5:1	5/5/2005	JB	M300007	A