Super-mini Signal Conditioners Mini-M Series

CURRENT REPEATER

(applicable to HART signal, opencircuit detection selectable)

Functions & Features

- Isolation between 2-wire transmitters and current loop supplies
- Isolates and relays HART signals
- Shortcircuit protection
- Opencircuit detection selectable
- Applicable to smart transmitters

Typical Applications

- 2-wire HART transmitters

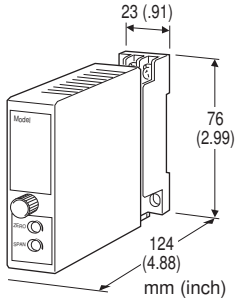

CE

MODEL: M2DYHR–24–[1][2]

ORDERING INFORMATION

- Code number: M2DYHR-24-[1][2]
  Specify a code from below for each [1] and [2].
  (e.g. M2DYHR-24-M2/B/CE/Q)
- Specify the specification for option code /Q
  (e.g. /C01/S01)

SUPPLY OUTPUT

24: 24 V DC

INPUT

Current

4 – 20 mA DC (Input resistance approx. 250 Ω)

OUTPUT

Current

4 – 20 mA DC (Supply voltage: 12 – 32 V DC)

[1] POWER INPUT

AC Power

M2: 100 – 240 V AC (Operational voltage range 85 – 264 V, 47 – 66 Hz)

DC Power

R: 24 V DC
(Operational voltage range 24 V ±10 %, ripple 10 %p-p max.)
R2: 11 – 27 V DC
(Operational voltage range 11 – 27 V, ripple 10 %p-p max.)
(Select '/N' for 'Standards & Approvals' code.)
P: 110 V DC
(Operational voltage range 85 – 150 V, ripple 10 %p-p max.)

[2] OPTIONS (multiple selections)

Opencircuit detection

blank: none
/B: Opencircuit detector

Standards & Approvals (must be specified)

/N: Without CE
/CE: CE marking

Other Options

blank: none
/Q: Option other than the above (specify the specification)

SPECIFICATIONS OF OPTION: Q (multiple selections)

COATING (For the detail, refer to M-System's web site.)

/C01: Silicone coating
/C02: Polyurethane coating
/C03: Rubber coating

TERMINAL SCREW MATERIAL

/S01: Stainless steel

GENERAL SPECIFICATIONS

Construction: Plug-in
Connection: M3 screw terminals (torque 0.8 N·m)
Screw terminal: Chromated steel (standard) or stainless steel
Housing material: Flame-resistant resin (black)
Isolation: Input to output to power
Overrange output: Approx. -10 to +110 %
Zero adjustment: -5 to +5 % (front)
Span adjustment: 95 to 105 % (front)
Opencircuit detection: Input current 0 mA when the output loop is open.
Photo MOS Relay ON Resistance; 3 Ω max.

SUPPLY OUTPUT

(across the terminals 1 – 5)
Output voltage: 24 – 28 V DC with no load
18 V DC min. at 20 mA
Current rating: ≤ 22 mA DC
• **Shortcircuit Protection**
Current limited: 30 mA max.

Protected time duration: No limit

INPUT SPECIFICATIONS

■ **DC Current**: Input resistor incorporated

OUTPUT SPECIFICATIONS

■ **Load resistance vs. supply voltage**:

Load Resistance (Ω) = (Supply Voltage (V) – 12 (V)) ÷ 0.02 (A)

(including leadwire resistance)

250 Ω ±10 % for HART communication

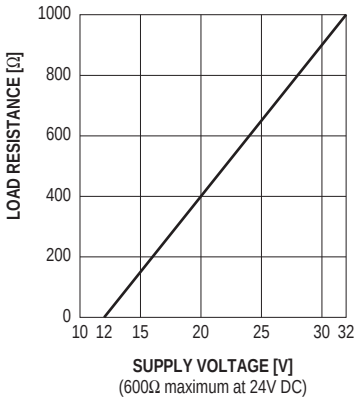

HART COMMUNICATION

Transmission gain: Approx. -3 dB (within 1 – 3 kHz)
measured with 250 Ω at output

Loop impedance: 250 Ω ±10 %

Communication directions: Bidirectional

INSTALLATION

Power Consumption

•**AC**:
Approx. 4 VA at 100 V
Approx. 6 VA at 200 V
Approx. 7 VA at 264 V

•**DC**: Approx. 3 W

Operating temperature: -5 to +55°C (23 to 131°F)

Operating humidity: 30 to 90 %RH (non-condensing)

Mounting: Surface or DIN rail

Weight: 150 g (0.33 lb)

PERFORMANCE in percentage of span

Accuracy: ±0.1 %

Temp. coefficient: ±0.015 %/°C (±0.008 %/°F)

Response time: ≤ 0.5 sec. (0 – 90 %)

Line voltage effect

Supply output: ±3 % over voltage range

Output signal: ±0.1 % over voltage range

Insulation resistance: ≥ 100 MΩ with 500 V DC

Dielectric strength: 2000 V AC @1 minute (input to output to power to ground)

STANDARDS & APPROVALS

EU conformity:

EMC Directive
EMI EN 61000-6-4
EMS EN 61000-6-2

Low Voltage Directive
EN 61010-1
Installation Category II
Pollution Degree 2
Input or output to power: Reinforced insulation (300 V)
Input to output: Basic insulation (300 V)

RoHS Directive
EN 50581

EXTERNAL DIMENSIONS & TERMINAL ASSIGNMENTS unit: mm (inch)

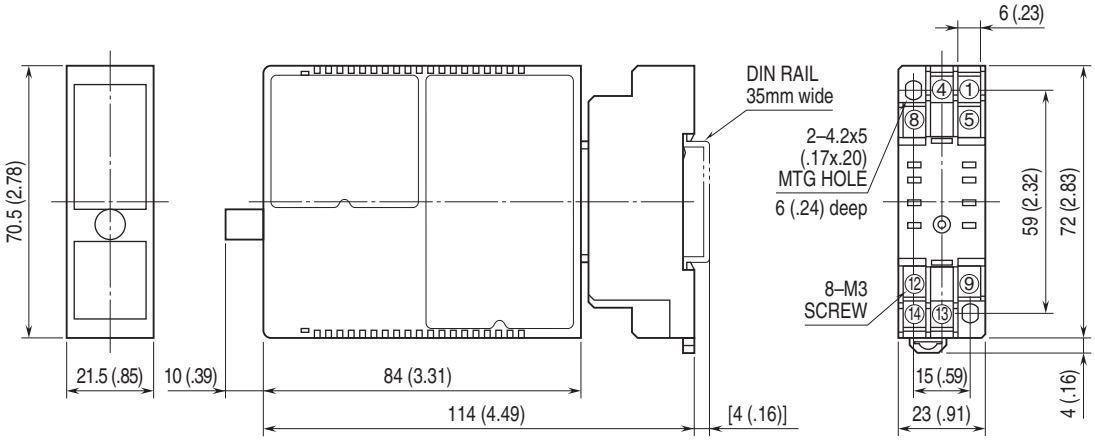

• When mounting, no extra space is needed between units.

SCHEMATIC CIRCUITRY & CONNECTION DIAGRAM

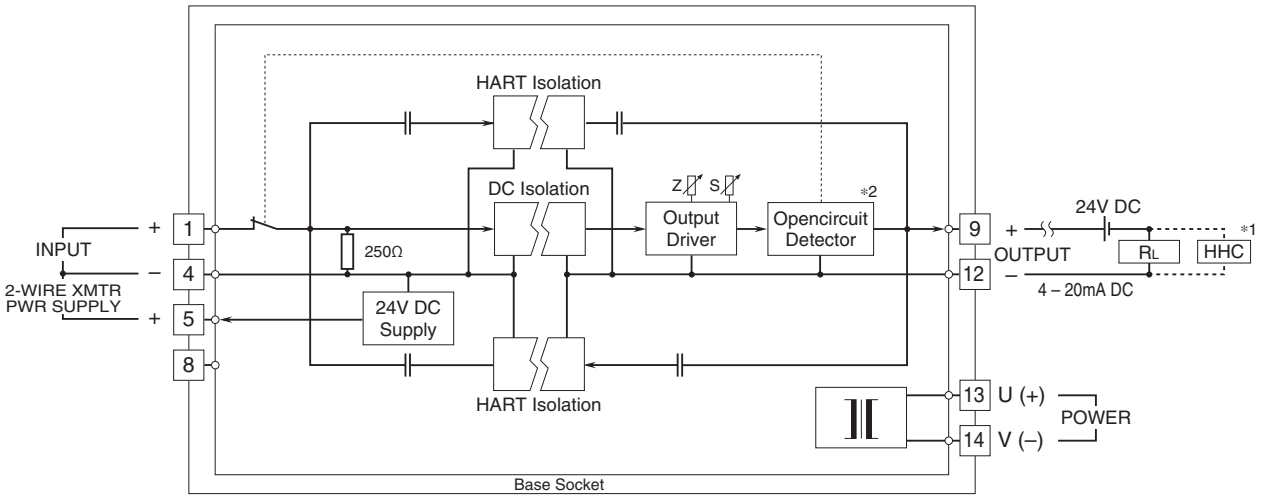

*1. Hand-held communicator
*2. Only for opencircuit detector (code /B)

■ When Used as DC Supply

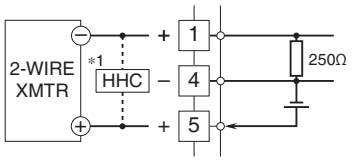

■ When Used as Isolator

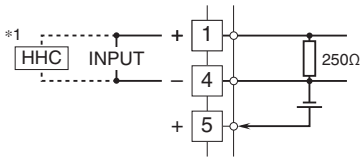

⚠ Specifications are subject to change without notice.