M25PXX

512 Kbit to 32 Mbit, Low Voltage, Serial Flash Memory With 40 MHz or 50 MHz SPI Bus Interface

DATA BRIEF

FEATURES SUMMARY

- 512Kbit to 32Mbit of Flash Memory
- Page Program (up to 256 Bytes) in 1.4ms (typical)
- Sector Erase (256 Kbit or 512Kbit)
- Bulk Erase (512Kbit to 32Mbit)
- 2.7 to 3.6V Single Supply Voltage
- SPI Bus Compatible Serial Interface
- 40MHz to 50MHz Clock Rate (maximum)
- Deep Power-down Mode 1µA (typical)
- Electronic Signatures
  - JEDEC Standard Two-Byte Signature (20xxh)
  - RES Instruction, One-Byte, Signature, for backward compatibility
- More than 100000 Erase/Program Cycles per Sector
- More than 20 Year Data Retention

Table 1. Product List

Reference	Part Number
M25Pxx	M25P32
	M25P16
	M25P80
	M25P40
	M25P20
	M25P10-A
	M25P05-A

Figure 1. Packages

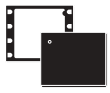

VDFPN8 (ME)
8x6mm (MLP8)



VDFPN8 (MP)
(MLP8)



SO16 (MF)
300 mil width

8



1

SO8 (MN)
150 mil width

For further information contact your local ST sales office.

SUMMARY DESCRIPTION

The M25Pxx is a 512Kbit to 32Mbit (2M x 8) Serial Flash Memory, with advanced write protection mechanisms, accessed by a high speed SPI-compatible bus.

The memory can be programmed 1 to 256 bytes at a time, using the Page Program instruction.

The memory is organized as a number of sectors, each containing 256 or 128 pages. Each page is 256 bytes wide.

The whole memory can be erased using the Bulk Erase instruction, or a sector at a time, using the Sector Erase instruction.

Figure 2. Logic Diagram

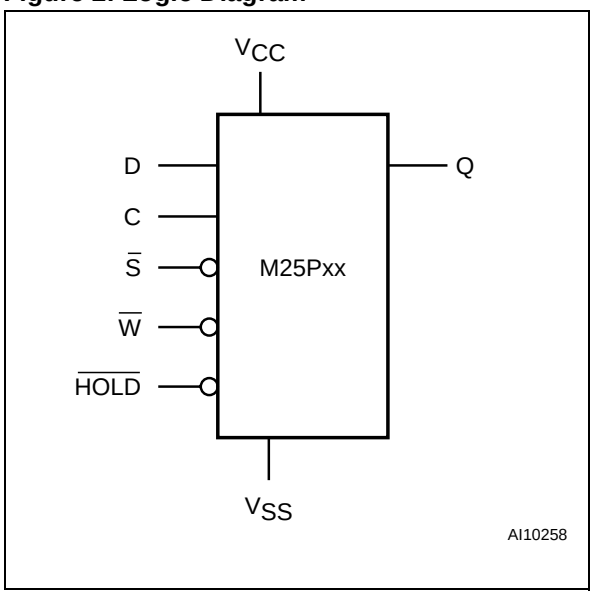

Table 2. Signal Names

C	Serial Clock
D	Serial Data Input
Q	Serial Data Output
$\overline{S}$	Chip Select
$\overline{W}$	Write Protect
$\overline{HOLD}$	Hold
V_{CC}	Supply Voltage
V_{SS}	Ground

Figure 3. SO8 and VDFPN Connections

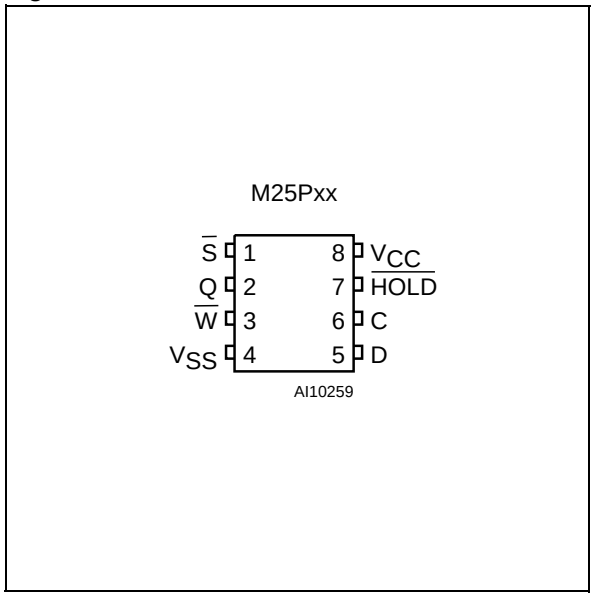

Note: 1. There is an exposed die paddle on the underside of the MLP8 package. This is pulled, internally, to V_{SS}, and must not be allowed to be connected to any other voltage or signal line on the PCB.

Figure 4. SO16 Connections

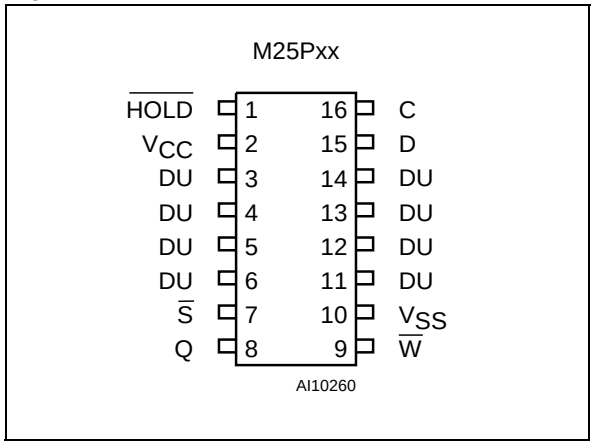

Note: 1. DU = Don't Use

Figure 5. Block Diagram

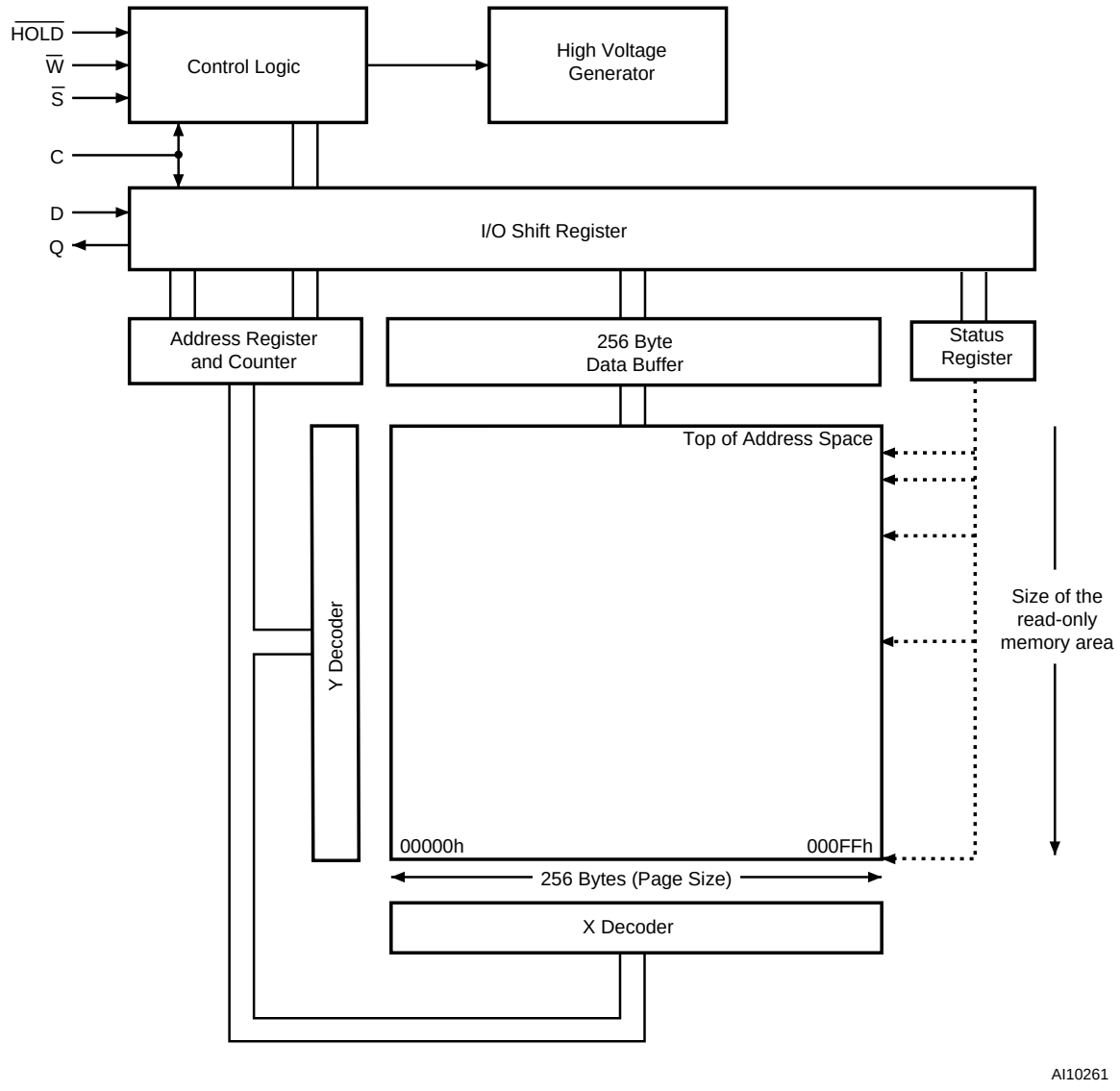

Table 3. Instruction Set

Instruction	Description	One-byte Instruction Code		Address Bytes	Dummy Bytes	Data Bytes
WREN	Write Enable	0000 0110	06h	0	0	0
WRDI	Write Disable	0000 0100	04h	0	0	0
RDID	Read Identification	1001 1111	9Fh	0	0	1 to 3
RDSR	Read Status Register	0000 0101	05h	0	0	1 to ∞
WRSR	Write Status Register	0000 0001	01h	0	0	1
READ	Read Data Bytes	0000 0011	03h	3	0	1 to ∞
FAST_READ	Read Data Bytes at Higher Speed	0000 1011	0Bh	3	1	1 to ∞
PP	Page Program	0000 0010	02h	3	0	1 to 256
SE	Sector Erase	1101 1000	D8h	3	0	0
BE	Bulk Erase	1100 0111	C7h	0	0	0
DP	Deep Power-down	1011 1001	B9h	0	0	0
RES	Release from Deep Power-down, and Read Electronic Signature	1010 1011	ABh	0	3	1 to ∞
	Release from Deep Power-down			0	0	0

Table 4. Status Register Format

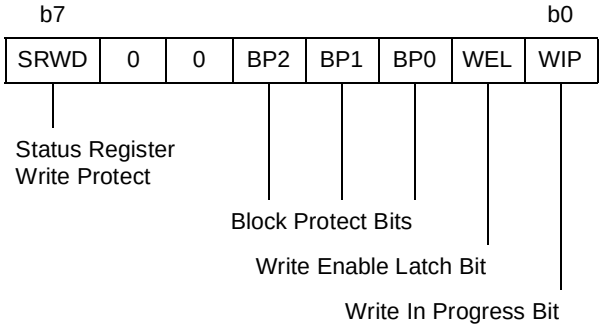

PART NUMBERING

Table 5. Ordering Information Scheme

Example: M25P80 – V MP 6 T P

Device Type

M25P = Serial Flash Memory for Code Storage

Device Function

32 = 32Mbit (4M x 8)
16 = 16Mbit (2M x 8)
80 = 8Mbit (1M x 8)
40 = 4Mbit (512K x 8)
20 = 2Mbit (256K x 8)
10-A = 1Mbit (128K x 8)
05-A = 512Kbit (64K x 8)

Operating Voltage

V = V_{CC} = 2.7 to 3.6V

Package

ME = VDFPN8 8x6mm (MLP8)
MP = VDFPN8 (MLP8)
MF = SO16 (300 mil width)
MN = SO8 (150 mil width)

Device Grade

6 = Industrial temperature range, –40 to 85 °C.
Device tested with standard test flow

3 = Device tested with High Reliability Certified Flow[1].
Automotive temperature range (–40 to 125 °C)

Option

blank = Standard Packing
T = Tape and Reel Packing

Plating Technology

blank = Standard SnPb plating
P = Lead-Free and RoHS compliant
G = Lead-Free, RoHS compliant, Sb_2O_3-free and TBBA-free

Note: 1. ST strongly recommends the use of the Automotive Grade devices for use in an automotive environment. The High Reliability Certified Flow (HRCF) is described in the quality note QNEE9801. Please ask your nearest ST sales office for a copy.

For a list of available options (speed, package, etc.) or for further information on any aspect of this device, please contact your nearest ST Sales Office.

REVISION HISTORY

Table 6. Document Revision History

Date	Rev.	Description of Revision
08-Oct-2004	1.0	First release

Information furnished is believed to be accurate and reliable. However, STMicroelectronics assumes no responsibility for the consequences of use of such information nor for any infringement of patents or other rights of third parties which may result from its use. No license is granted by implication or otherwise under any patent or patent rights of STMicroelectronics. Specifications mentioned in this publication are subject to change without notice. This publication supersedes and replaces all information previously supplied. STMicroelectronics products are not authorized for use as critical components in life support devices or systems without express written approval of STMicroelectronics.

The ST logo is a registered trademark of STMicroelectronics.

All other names are the property of their respective owners

© 2004 STMicroelectronics - All rights reserved

STMicroelectronics group of companies
Australia - Belgium - Brazil - Canada - China - Czech Republic - Finland - France - Germany - Hong Kong - India - Israel - Italy - Japan - Malaysia - Malta - Morocco - Singapore - Spain - Sweden - Switzerland - United Kingdom - United States of America
www.st.com