REV	CHANGE	DATE	DRN	CHK
	Drawn	02/08/17	SJ	T

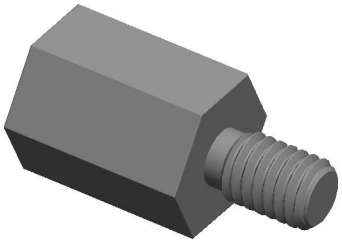

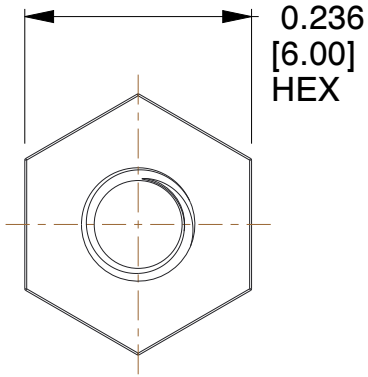

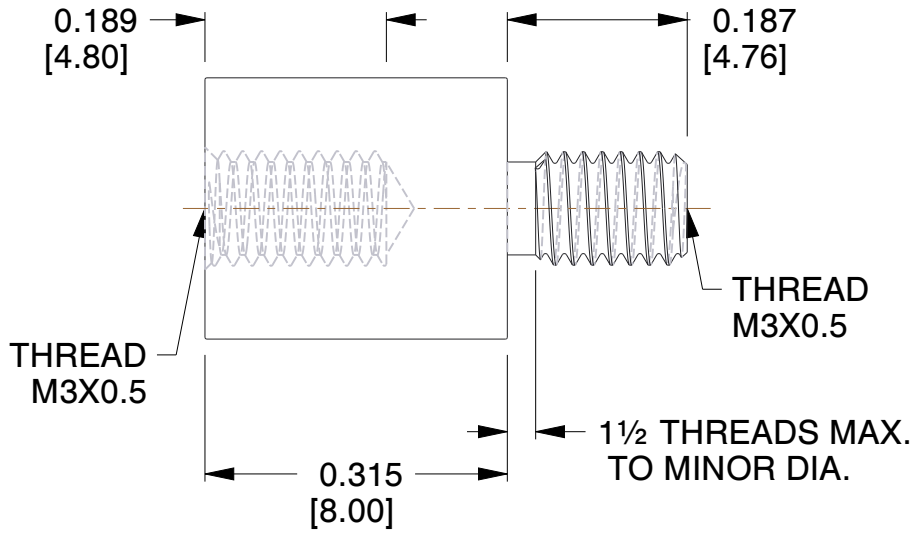

NOTES:

1. Material : Nylon
2. Finish : No Plate
3. ASME Y14.5M - 2009
4. All Drawing Dimensions are in Inches [mm]
5. Unless otherwise specified; Edge Breaks, Radii or Countersinks 0.005-0.015

COMPONENT	STANDOFFS

95 Silvermine Rd.,Seymour CT 06483
Tel: 203-888-2133, Fax: 203-888-9860

This Drawing is the Property of RAF. It contains confidential, proprietary information that is RAF property. Do not disclose to or duplicate for others except as authorized by RAF.

TOLERANCES
ALL DIMENSIONS ARE INCHES
(UNLESS OTHERWISE SPECIFIED)
METALLIC
LENGTHS </= : 6 INCHES ± 0.005
LENGTH >: 6 INCHES ±0.010
DIAMETERS: ±0.005
NON-METALLIC
LENGTH: ±0.010 DIAMETERS: ± 0.010
INTERNAL THREADS:
MINIMUM THREAD DEPTH

M2143-3005-N

6 MM HEX MALE-FEMALE STANDOFFS

SCALE	5.00
SHEET	1 of 1