Customer Information Sheet

DRAWING No.: M20-997XXXX	SHEET 2 OF 2	IF IN DOUBT - ASK	©	NOT TO SCALE	THIRD ANGLE PROJECTION	ALL DIMENSIONS IN mm

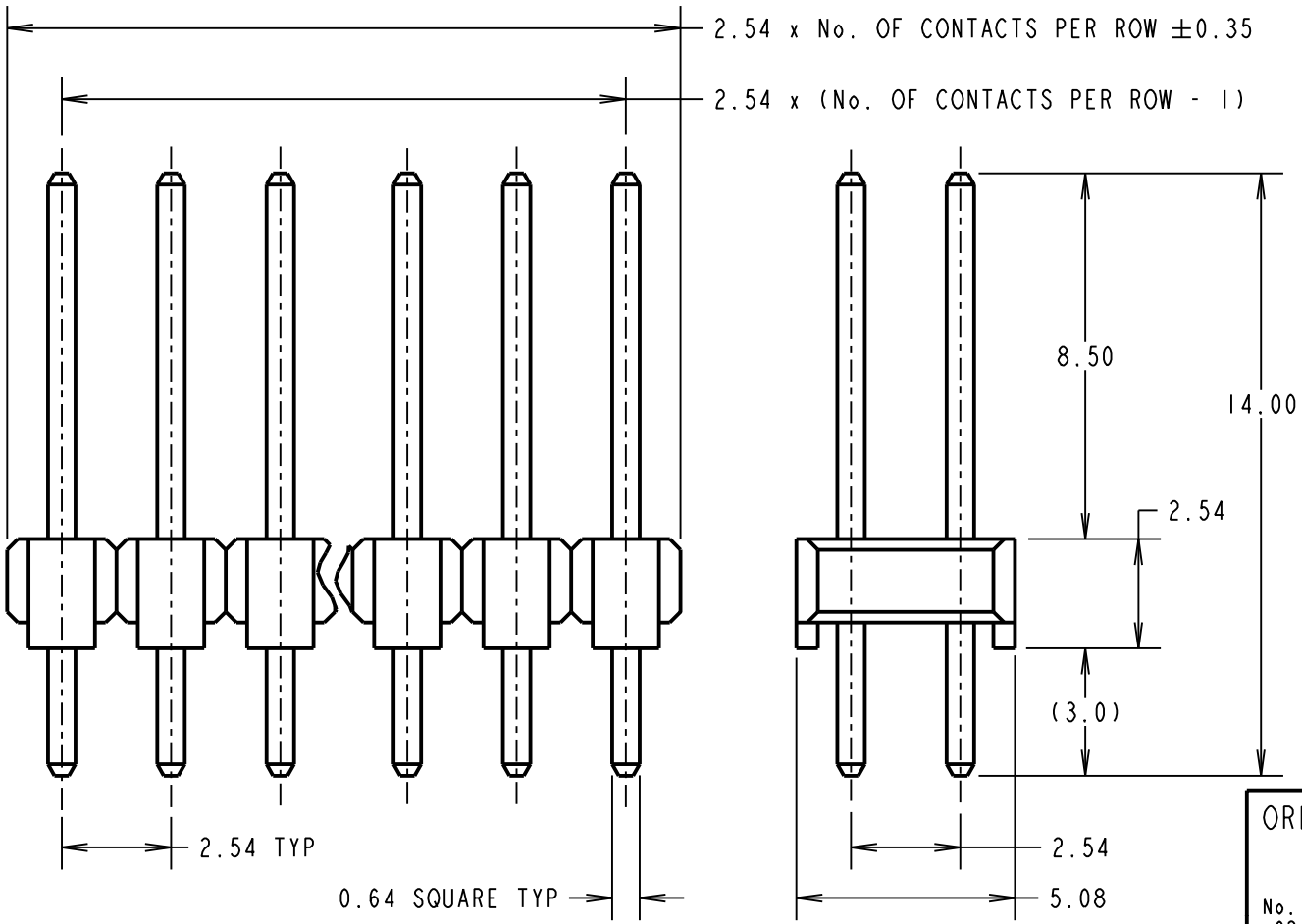

SPECIFICATION:
MATERIAL:
MOULDING = PA6T UL94V-0, BLACK
PINS = BRASS
FINISH:
PINS (OVER NICKEL):
45 = GOLD
46 = 100% TIN
ELECTRICAL:
CURRENT RATING = 3A MAX
CONTACT RESISTANCE = 25mΩ MAX (GOLD), 30mΩ MAX (TIN)
INSULATION RESISTANCE = 1,000MΩ MIN
DIELECTRIC STRENGTH = 750V AC/DC
MECHANICAL:
DURABILITY = 300 OPERATIONS (GOLD), 50 OPERATIONS (TIN)
ENVIRONMENTAL:
TEMPERATURE RANGE = -40°C TO +105°C
PACKING:
BAG
FOR COMPLETE SPECIFICATION, SEE COMPONENT SPECIFICATION C001XX (LATEST ISSUE)

NOTES:
1. ALL TOLERANCES ARE ±0.25mm UNLESS OTHERWISE STATED.
2. RECOMMENDED PCB MOUNTING HOLE SIZE = Ø1.00mm.
3. SUITABLE FOR USE WITH BOTTOM ENTRY SOCKETS.

ORDER CODE:
M20-997XXXX
No. OF CONTACTS PER ROW:
02 TO 20, 25, 36, 40
FINISH:
45 = GOLD
46 = 100% TIN

NAME	ISS.	DATE	C/NOTE
WJP	15	01.08.17	20398
APPROVED: W. J. PRESTON			
CHECKED: M. PLESTED			
DRAWN: K. SHIER			
CUSTOMER REF.:			
ASSEMBLY DRG:			

HARWIN
www.harwin.com
technical@harwin.com

THIS DRAWING AND ANY INFORMATION OR DESCRIPTIVE MATTER SET OUT HEREON ARE CONFIDENTIAL AND COPYRIGHT PROPERTY OF THE HARWIN GROUP AND MUST NOT BE DISCLOSED, LOANED, COPIED OR USED FOR MANUFACTURING, TENDERING OR FOR ANY OTHER PURPOSE WITHOUT THEIR WRITTEN PERMISSION.

TOLERANCES
X = ±1mm
X.X = ±0.50mm
X.XX = ±0.10mm
X.XXX = ±0.01mm
ANGLES = ±5°
UNLESS STATED

MATERIAL: SEE ABOVE
FINISH: SEE ABOVE
S/AREA: mm²

TITLE:
2.54mm PITCH DIL VERTICAL PIN HEADER ASSEMBLY (8.5mm)

DRAWING NUMBER:
M20-997XXXX

SHT 2 OF 2