SHEET 1 OF 1

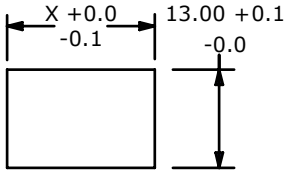

RECOMMENDED PANEL MOUNTING

PANEL THICKNESS	X
0.75-1.25	19.2
1.25-2.00	19.4
2.00-3.00	19.6

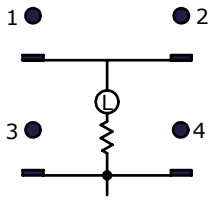

DPST ▲
OFF - ON

▲ SWITCH FUNCTION	
POS. 1	POS. 2
	
OFF	ON
OPEN	1-2, 3-4

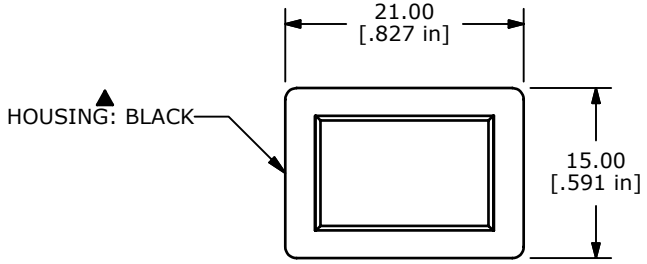

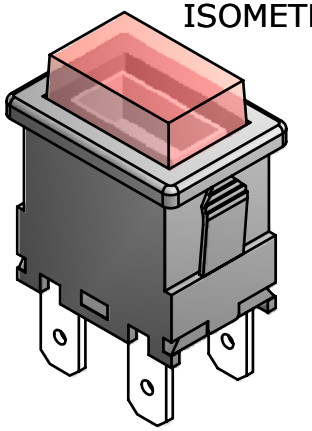

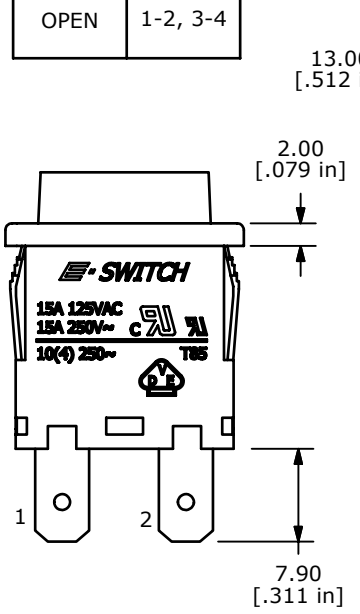

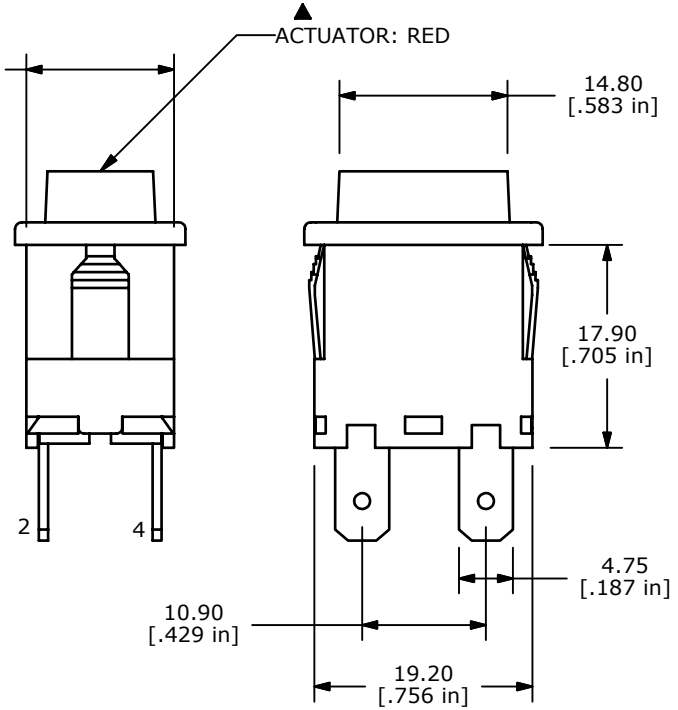

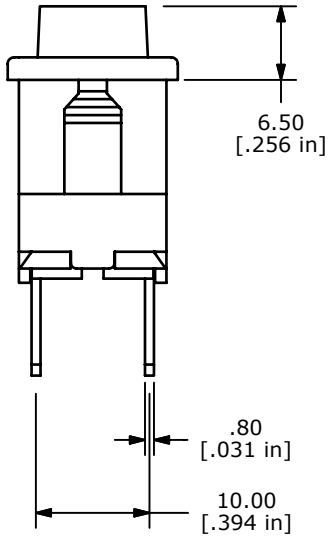

NOTES:
1. ALL DIMESNSIONS IN MM [INCH]
2. GENERAL TOLERANCE: X.X=± 0.4
   X.XX=± 0.25
3. MECHANICAL LIFE: 30,000 min.
4. ELECTRICAL LIFE: 10,000 min.
5. CONTACT RESISTANCE: 20 mILLI OHMS max.
6. INSULATION RESISTANCE: 1000 MEGA OHMS min.
7. OPERATING TEMPERATURE: -10˚C TO 55˚C
8. CONTACT RATING: 15A-250 VAC, 125VAC UL APPROVED
   10A 250VAC, VDE APPROVED
9. DIELECTRIC STRENGTH: 1500V FOR 1 MIN
10. LAMP: INCANDESCENT, 24VDC
10. ▲ DENOTES CRITICAL PARAMETER
11. 2002/95/EC (RoHS) COMPLIANT.
12. OPERATING FORCE: 750±100grams

REV	PCR NO	DESCRIPTION	DATE	BY
A	17986	RELEASE FOR PRODUCTION	2/29/08	BLR

THE INFORMATION CONTAINED IN THIS DOCUMENT IS PROPRIETARY TO E-SWITCH AND IS NOT TO BE COPIED OR TRANSFERRED

E-SWITCH™

TITLE PB1973GBLKRILEF4

SCALE	DATE	DR	DWG	REV
1.5	2/29/2008	BLR	M197314	A