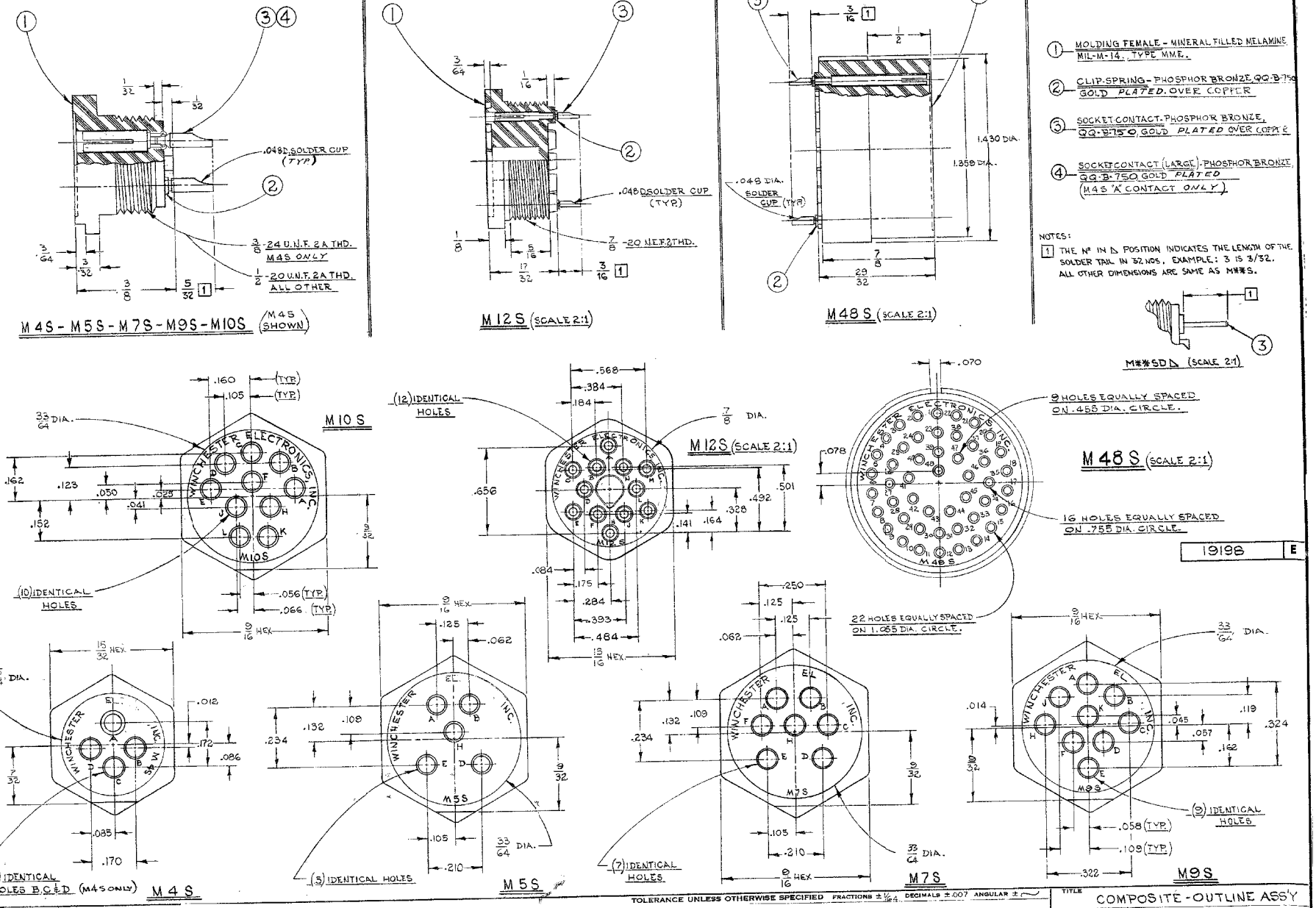

CHANGE	DATE
ADDED TYPS. M*S-10BC, M*S-10AD, M*S-10AE, M*S-10AF, M*S-10AG, M*S-10AH	9-11-63
REMOVED ALTERNATE FINISH NOTE. ITEMS 1, 2 HAVE GOLD OVER SILVER, SEE EN 11077	6-30-66 WZ
REMOVED "MB" SPACES. ENTIRELY	1-2-68 WZ
REVISED PER ECR # 4118	D.J.P. 05-08-96
REVISED TO CLIPPED STYLE CONTACT. ECR7875	C.W.E. 10/07/03
E	

TOLERANCE UNLESS OTHERWISE SPECIFIED FRACTIONS ± 1/64 DECIMALS ± .007 ANGULAR ±

TITLE: COMPOSITE-OUTLINE ASS'Y
M**S & M**SDΔ
FINISH
SCALE 4:1 & NOTED | DR. R. Middlebrook DATE 7-5-61 | CK'D. COLE DATE 8-5-61 | APP'D. DATE
WINCHESTER ELECTRONICS, INC.
NORWALK, CONN.
DWG. C 19198 REV. E

June 2006 - This drawing became the property of Winchester Electronics Corporation, Wallingford, CT.