LUXEON Z

Color Portfolio

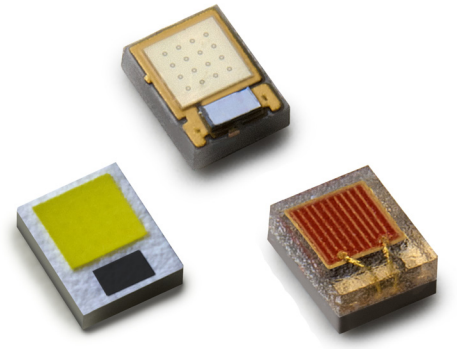

Introduction

LUXEON® Z is a broad portfolio of color and white LEDs that enable never before seen lumen density, flexibility and freedom of design. Available in the full spectrum of colors from 440nm to 670nm and a complete selection of white color temperatures, LUXEON Z is ideal for entertainment/stage lighting, indoor and outdoor architectural lighting, emergency vehicle lighting, remote phosphor applications and a wide variety of specialty lighting applications.

Features

- 2.2 mm^2 micro footprint
- Undomed
- Tested and Binned at 500 mA
- Up to 1A max drive current
- Up to 150°C max T_j

Benefits

- Industry's leading lm/mm^2 for high flux density solutions
- Highest degree of design flexibility
- Superior color mixing and beam control through choice of optics
- Enables customizable light sources: linear, rectangular, circular.

Key Applications

- Architecture
  - Entertainment
  - Studio
- Lamps
  - Remote Phosphor
- Specialty
  - Emergency Vehicle

LUXEON Z DS105 ©2014 Philips Lumileds Lighting Company.

PHILIPS LUMILEDS

Table of Contents

General Information 2

Product Selection & Optical Characteristics 3

Flux Performance, Binning, and Supportability 4

Electrical Characteristics 5

Absolute Maximum Ratings 6

JEDEC Moisture Sensitivity 6

Reflow Soldering Characteristics 7

Mechanical Dimensions 8

Pad Configuration 11

Solder Pad Design 11

Wavelength Characteristics 12

Typical Light Output Characteristics 13

Typical Forward Current Characterisics 14

Typical Relative Luminous Flux 15

Typical Radiation Patterns: 16

Emitter Pocket Tape Packaging 19

Emitter Reel Packaging 21

Luminous Flux Bins 22

Forward Voltage Bins 23

Color Bins 24

General Information

Product Nomenclature

LUXEON Z Color emitters are tested and binned at 25°C or 85°C, 500 mA, depending on the product.

The part number designation for LUXEON Z Color LEDs is explained as follows:

L X Z 1 - A B C D - E F G H

Where:

A — designates radiation pattern (value P for lambertian)

B — designates color (see LUXEON Z color binning and labeling section)

C — designates color variant (0 for color variants)

D — designates color version (1, 2, etc.)

E — open slot to accommodate additional requirements per product and part number

FGH — (optional) minimum luminous flux (lm) or radiometric power (mW) performance

Please see DS120 for LUXEON Z White part number designation.

Product Selection & Optical Characteristics

Product Selection Guide for LUXEON Z Color Junction Temperature = 25°C

Table 1.

Color	Part Number	Performance @ 500 mA		Performance @ 700 mA	
		Minimum Luminous Flux (lm) or Radiometric Power (mW)	Typical Efficacy (lm/W) or Radiant Efficacy	Typical Luminous Flux (lm) or Radiometric Power (mW)	Typical Efficacy (lm/W) or Radiant Efficacy
Green	LXZ1-PM01	104 96 88 80	71 63 59 54	128 120 113 103	61 53 50 46
Cyan	LXZ1-PE01	64 56 48	44 39 35	84 74 67	38 33 30
Blue	LXZ1-PB01	40 32 24	30 26 21	57 49 39	27 23 19
Royal Blue	LXZ1-PR01	600 550 500	43% 40% 37%	823 757 704	40% 37% 35%
Deep Red	LXZ1-PA01	350 300	34% 32%	454 416	31% 29%
Red	LXZ1-PD01	56 48 40	54 50 42	77 70 60	49 46 38
Red-Orange	LXZ1-PH01	72 64 56	69 63 57	99 90 82	66 58 53
Amber	LXZ1-PL01	64 56 48	63 57 51	90 82 73	59 53 48

Notes for Table 1:

1. Minimum luminous flux or radiometric power performance guaranteed within published operating conditions. Philips Lumileds maintains a tolerance of ± 6.5% on flux and power measurements.
2. Typical luminous flux or radiometric power performance when device is operated within published operating conditions.

Product Selection Guide for LUXEON Z Color Junction Temperature = 85°C

Table 2.

Color	Part Number	Performance @ 500 mA		Performance @ 700 mA	
		Minimum Luminous Flux (lm)	Typical Efficacy (lm/W)	Typical Luminous Flux (lm)	Typical Efficacy (lm/W)
Lime	LXZ1-PX01	184 174 164 154 144	131 124 118 113 107	245 233 221 212 200	124 118 111 107 100

Notes for Table 2:

1. Minimum luminous flux or radiometric power performance guaranteed within published operating conditions. Philips Lumileds maintains a tolerance of ± 6.5% on flux and power measurements.
2. Typical luminous flux or radiometric power performance when device is operated at specified conditions.

Flux Performance, Binning, and Supportability

LEDs are produced with semiconductor technology that is subject to process variation, yielding a range of flux performance that is approximately Gaussian in nature. In order to provide customers with fine granularity within the overall flux distribution, Philips Lumileds separates LEDs into fixed, easy to design with, minimum luminous flux bins. To verify supportability of parts chosen for your application design, please consult your Philips Lumileds sales representative.

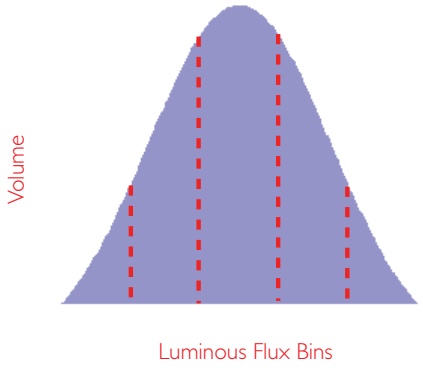

Optical Characteristics

LUXEON Z Color at 500 mA, Test Temperature

Table 3.

Color	Part Number	Dominant Wavelength [1], λ_D or Peak Wavelength [2], λ_P (nm)			Typical Spectral Half-width [3] (nm) $\Delta\lambda_{1/2}$	Typical Temp Coefficient of Dominant or Peak Wavelength (nm/°C) $\Delta\lambda_D / \Delta T_J$	Typical Total Included Angle [4] (degrees) θ_{90V}	Typical Viewing Angle [5] (degrees) 2θ ½
		Min	Typ	Max				
Green [6]	LXZ1-PM01	520.0	530.0	540.0	30	0.04	140	125
Cyan [6]	LXZ1-PE01	490.0	505.0	510.0	30	0.03	140	125
Blue [6]	LXZ1-PB01	460.0	470.0	480.0	20	0.03	140	125
Royal Blue [2] [6]	LXZ1-PR01	440.0	447.5	460.0	20	0.03	140	125
Red [7]	LXZ1-PD01	620.0	627.0	645.0	20	0.06	150	145
Deep Red [2] [7]	LXZ1-PA01	650.0	655.0	670.0	20	0.06	150	145
Red-Orange [7]	LXZ1-PH01	610.0	617.0	620.0	20	0.06	150	145
Amber [7]	LXZ1-PL01	585.0	590.0	595.0	20	0.10	150	145
Lime [8]	LXZ1-PX01	566.0	567.5	569.0	100	0.01	140	125

Notes for Table 3:

1. Dominant wavelength is derived from the CIE 1931 Chromaticity diagram and represents the perceived color. Philips Lumileds maintains a tolerance of ± 0.5 nm for dominant wavelength measurements.
2. Royal Blue and Deep Red LEDs are binned by radiometric power and peak wavelength rather than photometric lumens. Philips Lumileds maintains a tolerance of ± 2nm for peak wavelength measurements.
3. Spectral width at ½ of the peak intensity.
4. Total angle at which 90% of total luminous flux is captured.
5. Viewing angle is the off axis angle from lamp centerline where the luminous intensity is ½ of the peak value.
6. Green, cyan, blue, royal blue, lime and white products are built with Indium Gallium Nitride (InGaN).
7. All red, deep red, red-orange, and amber are built with Aluminum Indium Gallium Phosphide (AlInGaP).
8. LUXEON Z Lime is tested and binned at T_j = 85°C. All other LUXEON Z Color emitters are tested and binned at T_j = 25°C.

Electrical Characteristics

Electrical Characteristics for LUXEON Z Colors at Test Current and Temperature

Table 4.

Color	Part Number	Forward Voltage V_f [1] (V) @ 500 mA			Typical Forward Voltage @ 700 mA V_f	Typical Temperature Coefficient of Forward Voltage (mV/°C) $\Delta V_F / \Delta T_J$	Typical Thermal Resistance Junction to Case (°C/W) $R\theta_{J-C}$
		Minimum	Typical	Maximum			
Green	LXZ1-PM01	2.50	3.05	3.50	3.15	-2 to -4	5
Cyan	LXZ1-PE01	2.50	2.95	3.50	3.05	-2 to -4	5
Blue	LXZ1-PB01	2.50	3.15	3.50	3.25	-2 to -4	5
Royal Blue	LXZ1-PR01	2.50	2.90	3.50	2.95	-2 to -4	5
Red	LXZ1-PD01	1.75	2.20	2.75	2.40	-2 to -4	8
Deep Red	LXZ1-PA01	1.75	2.25	2.75	2.40	-2 to -4	8
Red-Orange	LXZ1-PH01	1.75	2.20	2.75	2.40	-2 to -4	8
Amber	LXZ1-PL01	1.75	2.15	2.75	2.35	-2 to -4	8
Lime	LXZ1-PX01	2.50	2.85	3.50	2.80	-2 to -4	5

Notes for Table 4:

1. Measured between T_j = 25°C and T_j = 85°C at I_f = 500 mA.
2. Philips Lumileds maintains a tolerance of ±0.06V on forward voltage measurements.
3. LUXEON Z Lime is tested and binned at Tj = 85°C. All other LUXEON Z Color emitters are tested and binned at Tj = 25°C.

Absolute Maximum Ratings

Table 5.

Parameter	Green/Cyan/ Blue/Royal Blue	Red/Deep-Red Red-Orange/Amber/Lime	Lime
DC Forward Current (mA)	1000	700	700
Peak Pulsed Forward Current (mA)	1000	700	700
ESD Sensitivity	Human Body Model (HBM) ESD Class 3A (<8000V), JEDEC JS-001-2012		
LED Junction Temperature [1]	150°C	135°C	135°C
Operating Case Temperature at 500 mA	-40°C - 135°C	-40°C - 120°C	-40°C - 110°C
Storage Temperature	-40°C - 135°C	-40°C - 135°C	-40°C - 135°C
Soldering Temperature	JEDEC 020c 260°C	JEDEC 020c 260°C	JEDEC 020c 260°C
Allowable Reflow Cycles	3	3	3
Reverse Voltage (V_r)	LUXEON Z Color Portfolio LEDs are not designed to be driven in reverse bias.		

Notes for Table 5:

1. Proper current derating must be observed to maintain junction temperature below the maximum.

JEDEC Moisture Sensitivity

Table 6.

Level	Floor Life		Soak Requirements	
			Standard	
	Time	Conditions	Time	Conditions
1	unlimited	≤ 30°C / 85% RH	168 Hrs. + 5 / -0 Hrs.	85°C / 85% RH

Reflow Soldering Characteristics

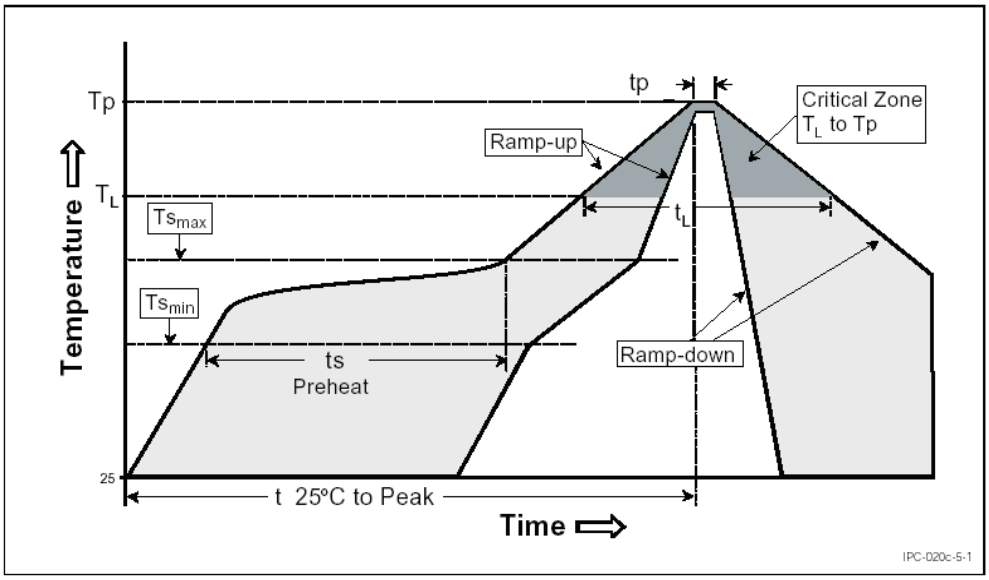

Temperature Profile for Table 7.

Table 7.

Profile Feature	Lead Free Assembly
Average Ramp-Up Rate (Ts_{max} to T_p)	3°C / second max
Preheat Temperature Min (T_{smin})	150°C
Preheat Temperature Max (Ts_{max})	200°C
Preheat Time (ts_{min} to ts_{max})	60 - 180 seconds
Temperature T_L (t_L)	217°C
Time Maintained Above Temperature T_L (t_L)	60 - 150 seconds
Peak / Classification Temperature (T_p)	260°C
Time Within 5°C of Actual Peak Temperature (t_p)	20 - 40 seconds
Ramp-Down Rate	6°C / second max
Time 25°C to Peak Temperature	8 minutes max

Note for Table 7:

1. All temperatures refer to the application Printed Circuit Board (PCB), measured on the surface adjacent to the package body.

Mechanical Dimensions

LUXEON Z Blue, Green, Royal Blue and Cyan

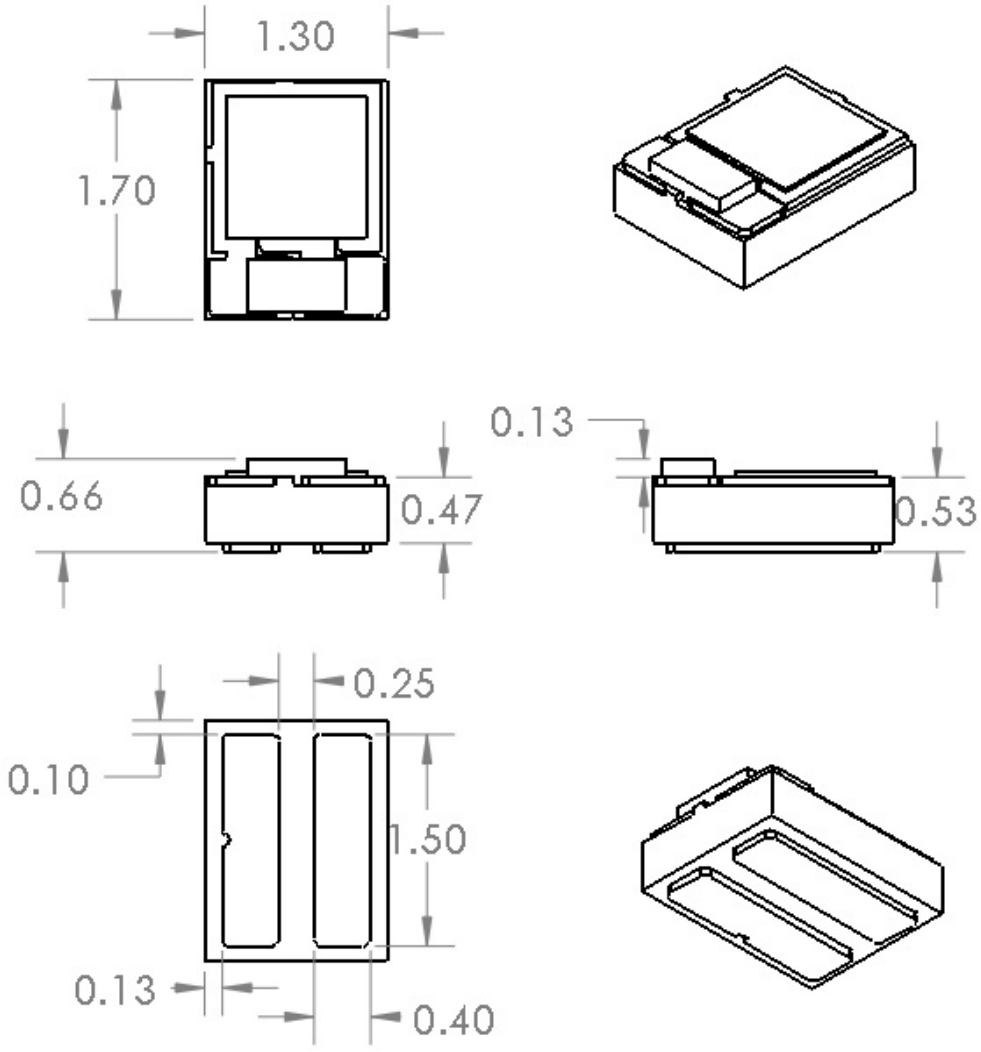

Figure 1. Package outline drawing for LXZ1-PR01, LXZ1-PB01, LXZ1-PE01 and LXZ1-PM01.

Notes for Figure 1:

1. To avoid damage, do not manually exert any force to the top surface. See AB105 for handling precautions.
2. Drawings not to scale.
3. All dimensions are in millimeters.

Mechanical Dimensions

LUXEON Z Lime

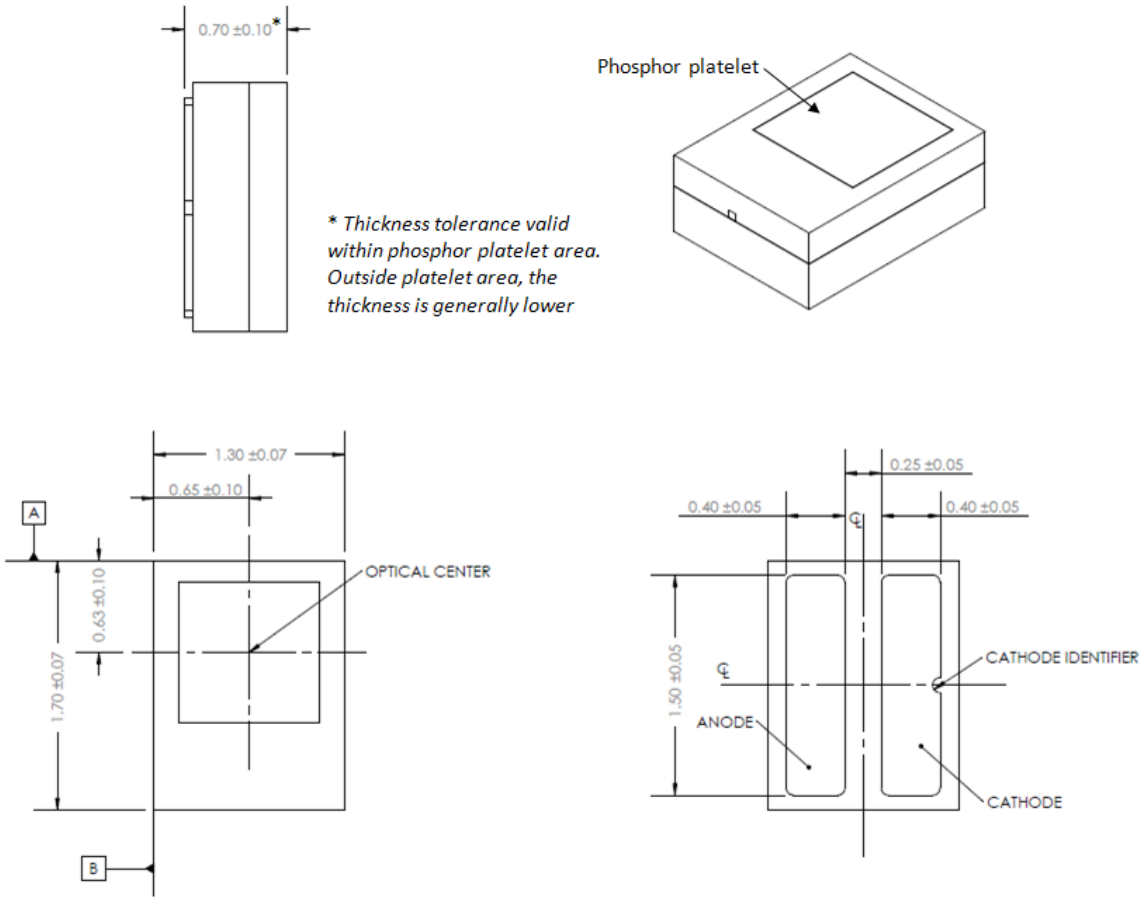

Figure 2. Package outline drawing for LXZ1-PX01.

Notes for Figure 2:

1. To avoid damage, do not manually exert any force to the top surface. See AB105 for handling precautions.
2. Drawings not to scale.
3. All dimensions are in millimeters.

Mechanical Dimensions

LUXEON Z Red, Red-Orange, Amber and Deep Red

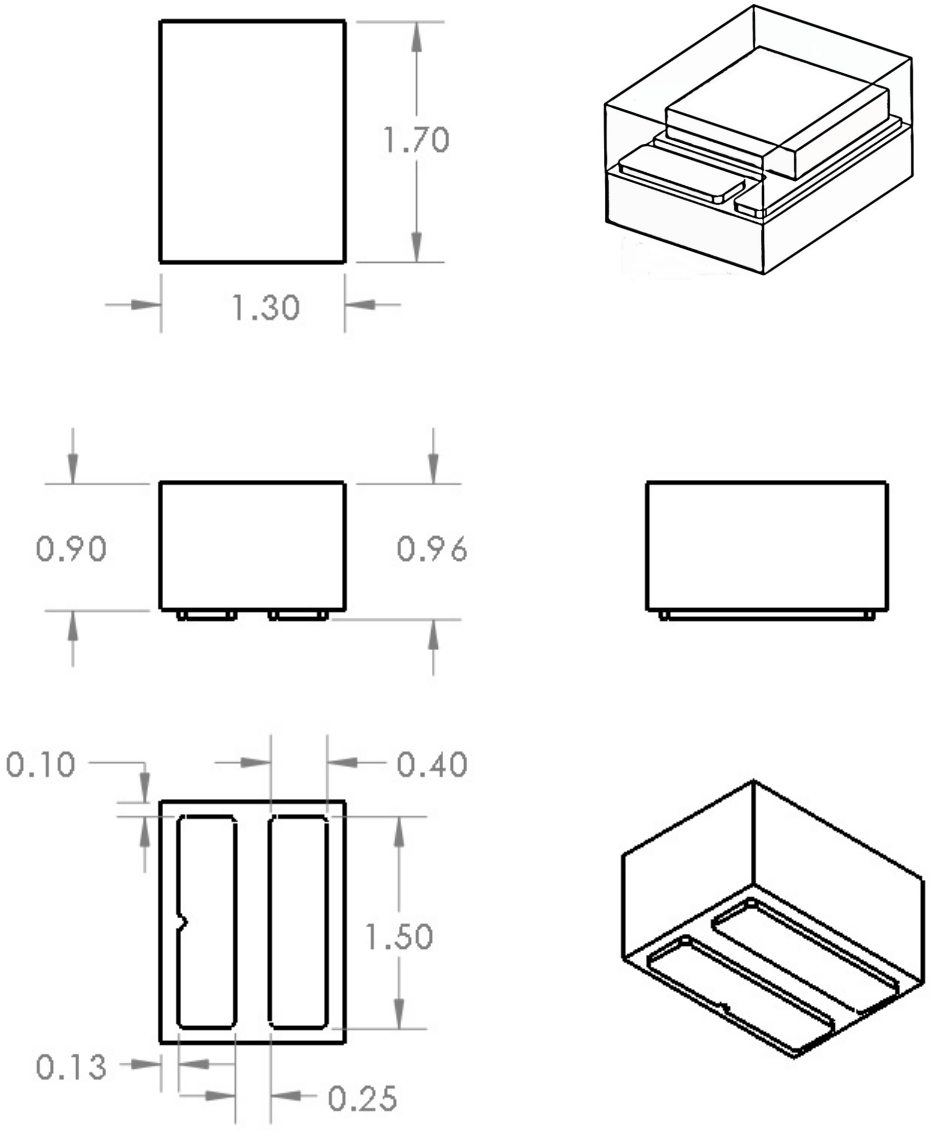

Figure 3. Package outline drawing for LXZ1-PL01, LXZ1-PA01, LXZ1-PD01 and LXZ1-PH01.

Notes for Figure 3:

1. To avoid damage, do not manually exert any force to the top surface or handle from the sides of the silicone layer. See AB105 for handling precautions.
2. Drawings not to scale.
3. All dimensions are in millimeters.

Pad Configuration

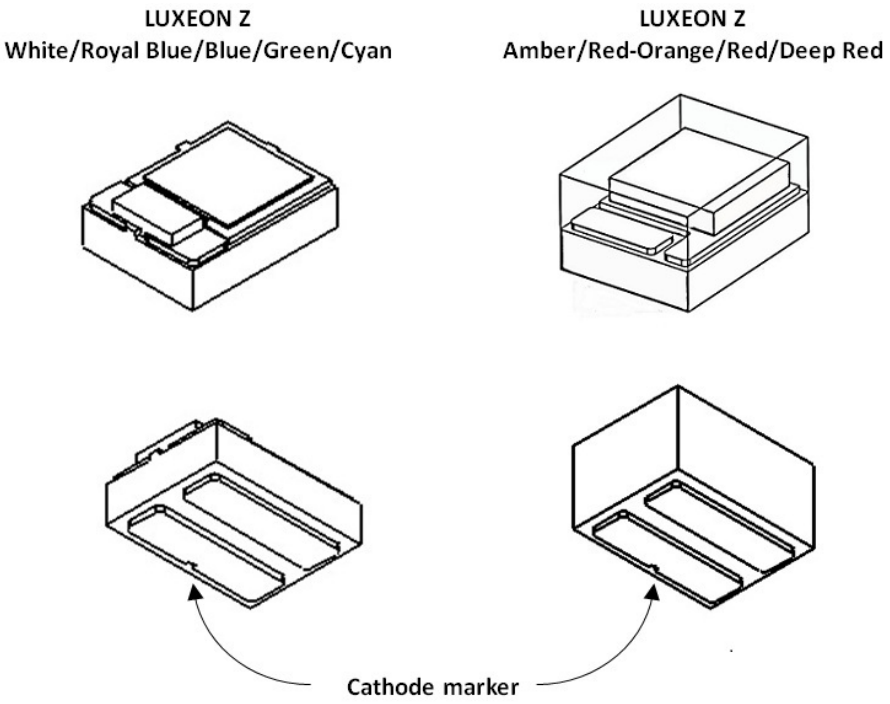

Figure 4. Pad configuration.

Solder Pad Design

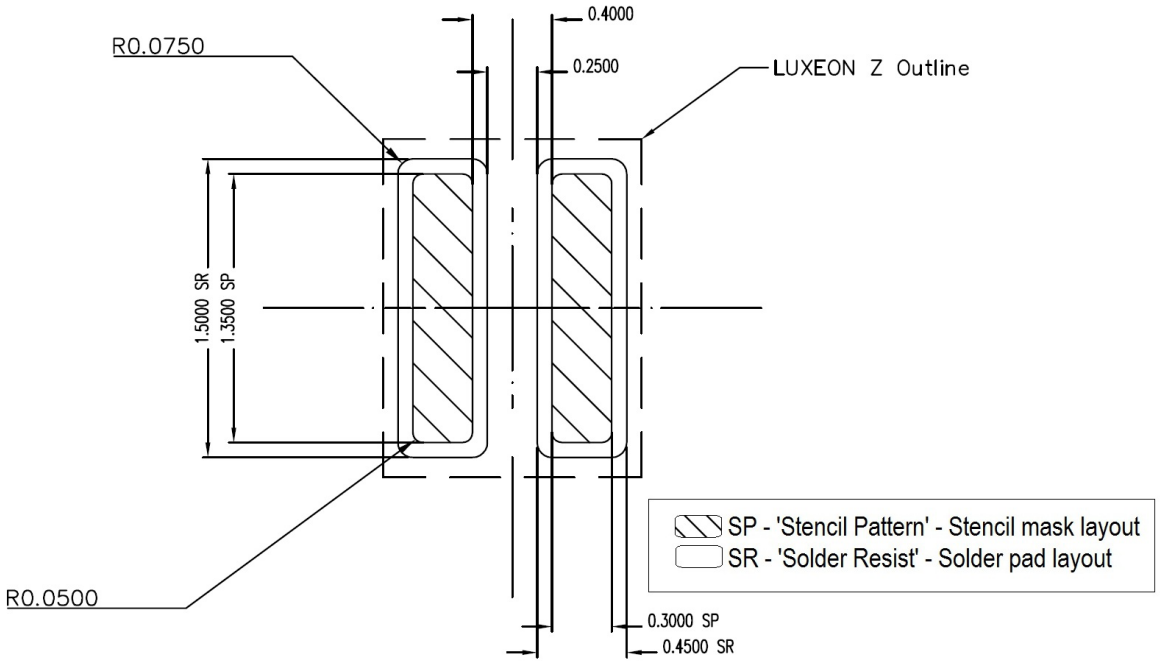

Figure 5. Solder pad layout.

Wavelength Characteristics

LUXEON Z Green, Cyan, Blue, Royal Blue, Red, Red-Orange and Amber at 500 mA, 25°C

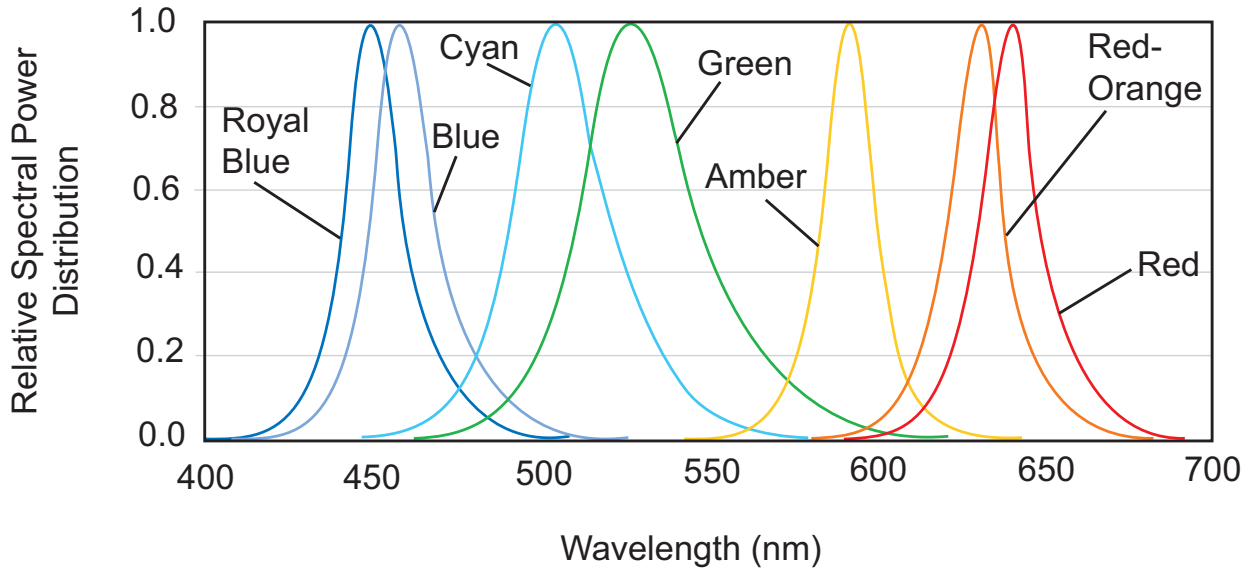

Figure 6. Relative intensity vs. wavelength.

LUXEON Z Lime at 500 mA, 85°C

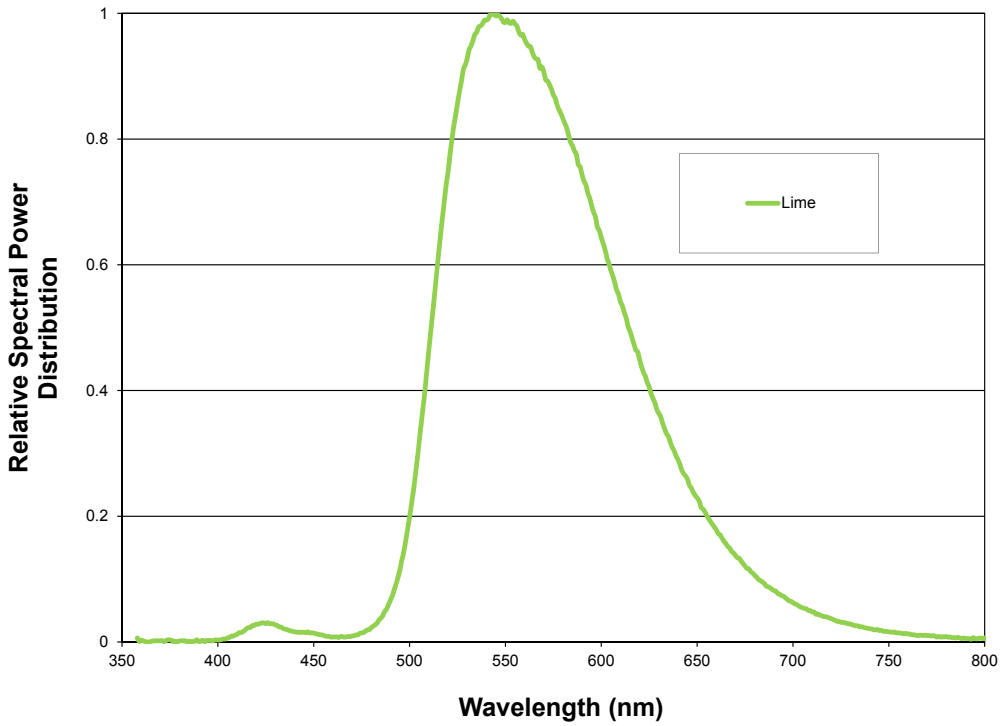

Figure 7. Relative intensity vs. wavelength.

Typical Light Output Characteristics

Relative Light Output vs. Thermal Pad Temperature, Test Current = 500 mA

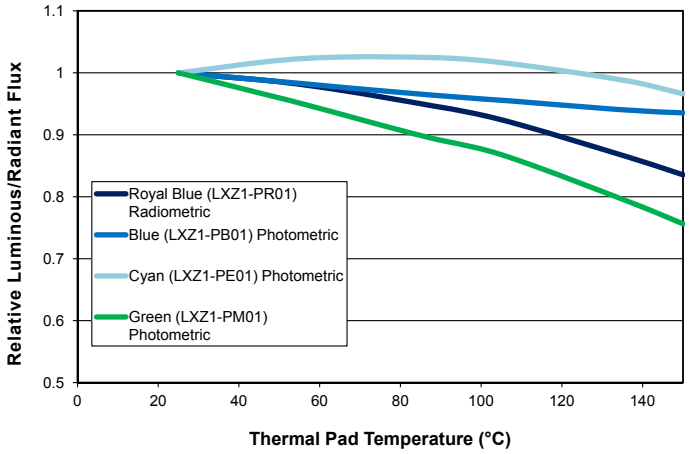

Figure 8. Relative light output vs. thermal pad temperature, LXZ1-PR01, LXZ1-PB01, LXZ1-PE01 and LXZ1-PM01.

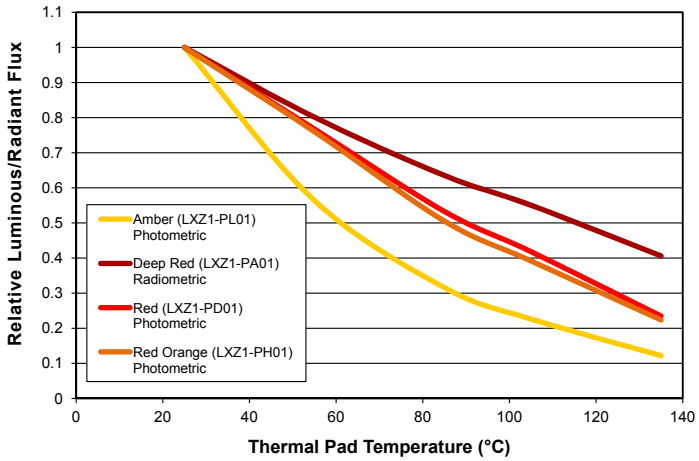

Figure 9. Relative light output vs. thermal pad temperature, LXZ1-PL01, LXZ1-PA01, LXZ1-PD01 and LXZ1-PH01.

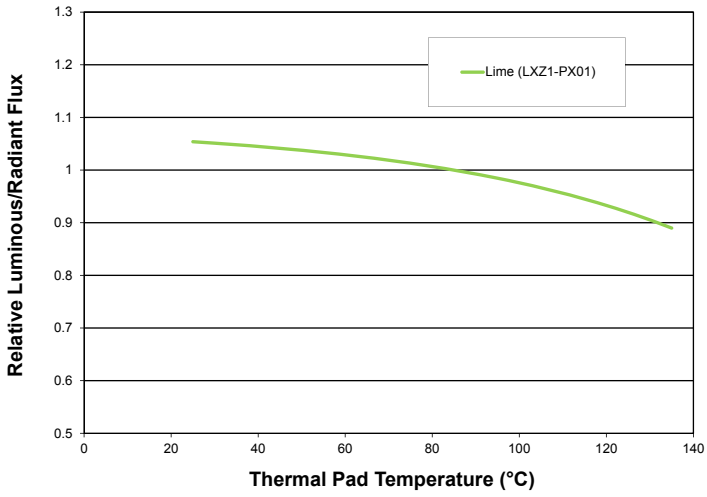

Figure 10. Relative light output vs. thermal pad temperature for LXZ1-PX01.

Typical Forward Current Characterisics

Forward Current vs. Forward Voltage
Junction Temperature = 25°C

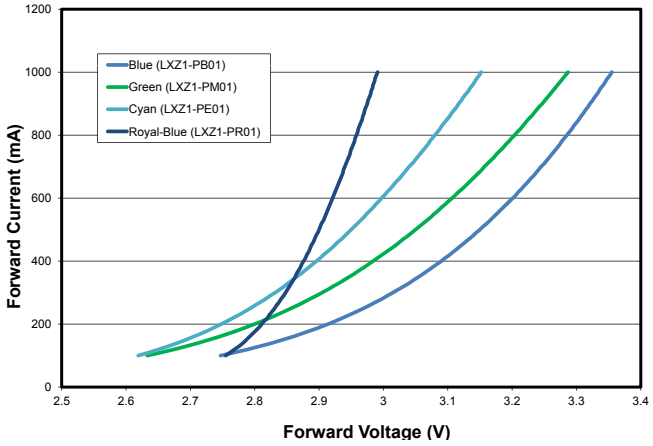

Figure 11. Forward current vs. forward voltage for LXZ1-PR01, LXZ1-PB01, LXZ1-PE01 and LXZ1-PM01.

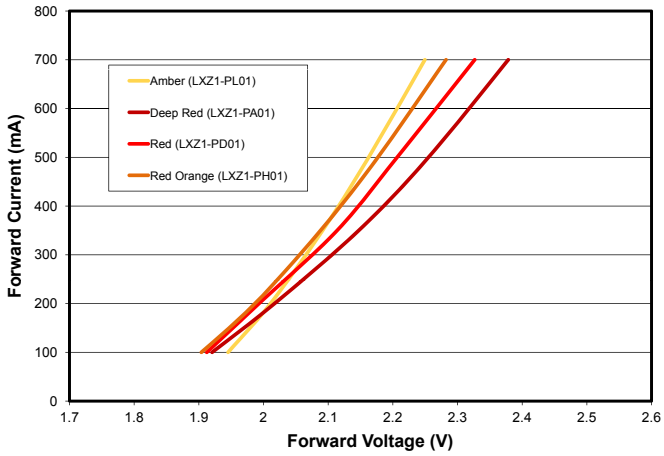

Figure 12. Forward current vs. forward voltage for LXZ1-PL01, LXZ1-PA01, LXZ1-PD01 and LXZ1-PH01.

Forward Current vs. Forward Voltage
Junction Temperature = 85°C

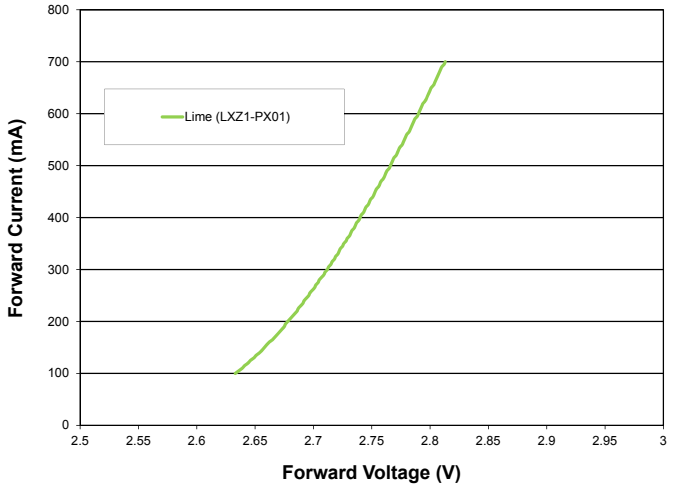

Figure 13. Forward current vs. forward voltage for LXZ1-PX01.

Typical Relative Luminous Flux

Relative Luminous Flux vs. Forward Current Junction Temperature = 25°C

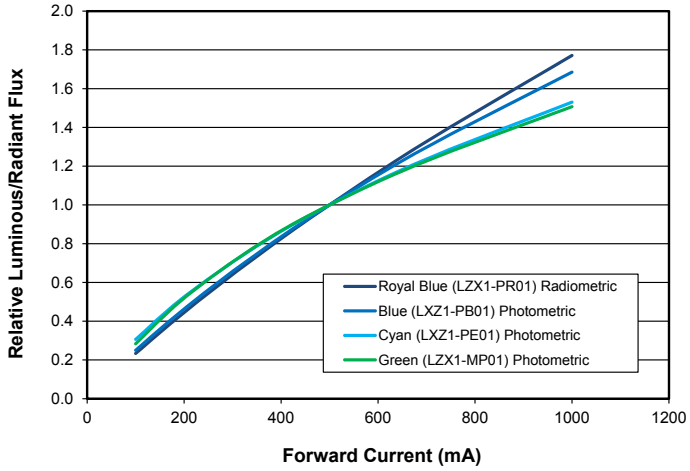

Figure 14. Relative luminous flux vs. forward current for LXZ1-PR01, LXZ1-PB01, LXZ1-PE01 and LXZ1-PM01.

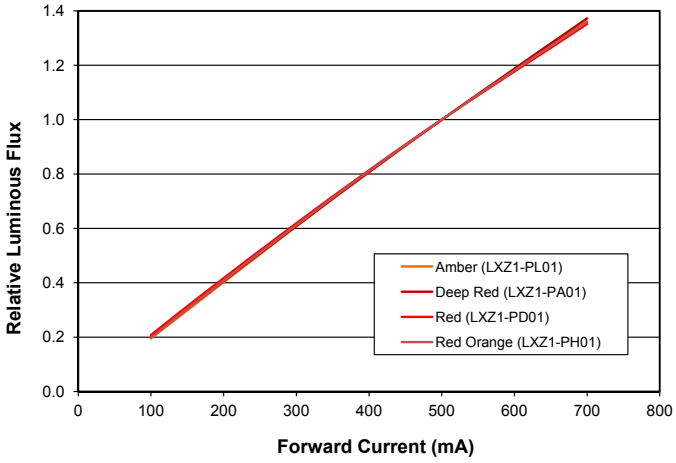

Figure 15. Relative luminous flux vs. forward current for LXZ1-PL01, LXZ1-PA01, LXZ1-PD01 and LXZ1-PH01.

Relative Luminous Flux vs. Forward Current Junction Temperature = 85°C

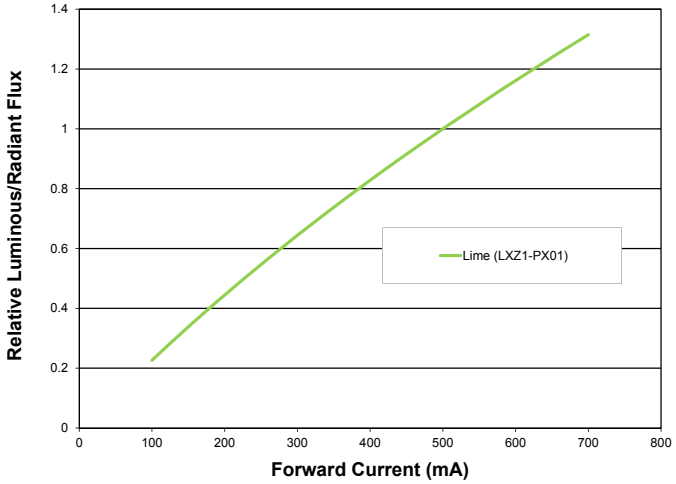

Figure 16. Relative luminous flux vs. forward current for LXZ1-PX01.

Typical Radiation Patterns: LUXEON Z Green, Cyan, Blue and Royal Blue

Spatial Radiation Pattern

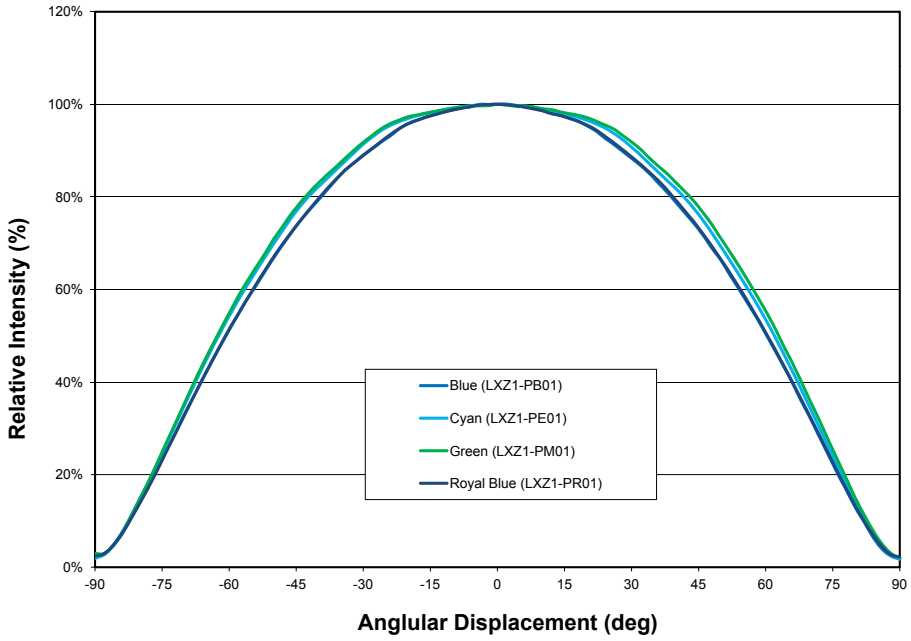

Figure 17. Typical spatial radiation pattern for LXZ1-PR01, LXZ1-PB01, LXZ1-PE01 and LXZ1-PM01.

Polar Radiation Pattern

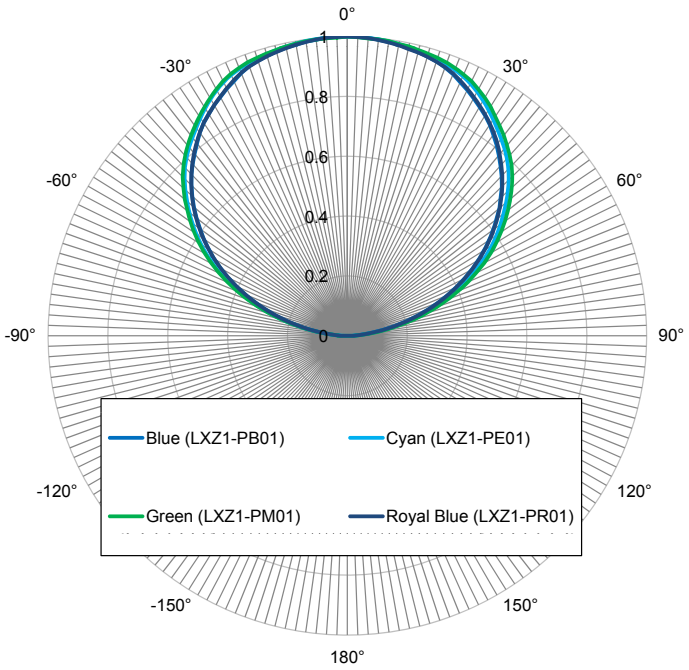

Figure 18. Typical polar radiation pattern for LXZ1-PR01, LXZ1-PB01, LXZ1-PE01 and LXZ1-PM01.

Typical Radiation Patterns: LUXEON Z Red, Red-Orange, Amber and Deep Red

Spatial Radiation Pattern

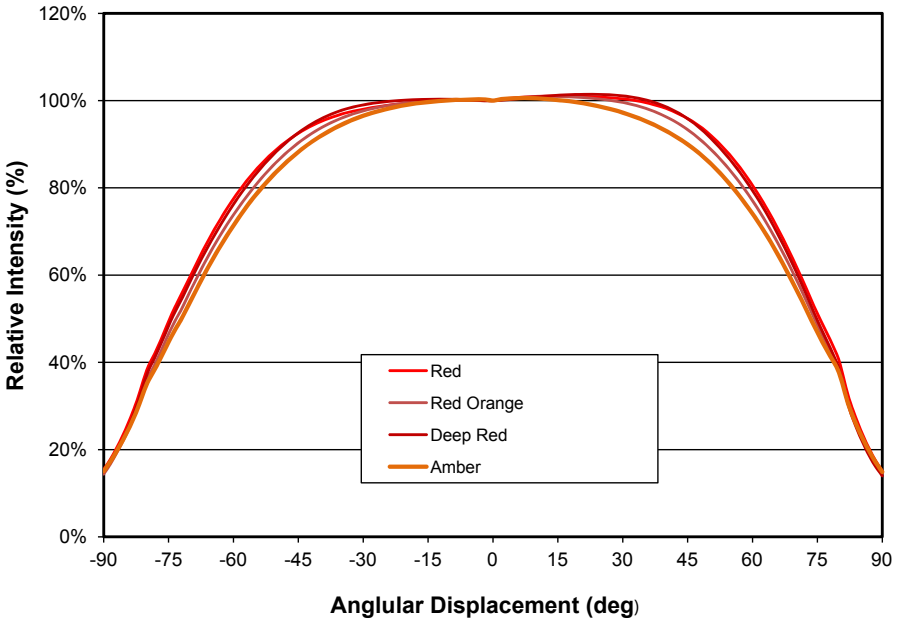

Figure 19. Spatial radiation pattern for LXZ1-PL01, LXZ1-PA01, LXZ1-PD01 and LXZ1-PH01.

Polar Radiation Pattern

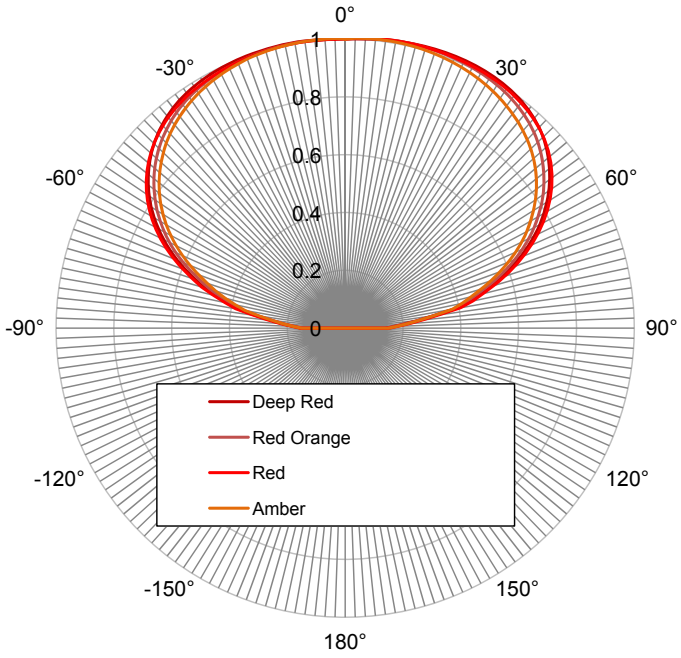

Figure 20. Typical polar radiation pattern for LXZ1-PL01, LXZ1-PA01, LXZ1-PD01 and LXZ1-PH01.

Typical Radiation Patterns: LUXEON Z Lime

Spatial Radiation Pattern

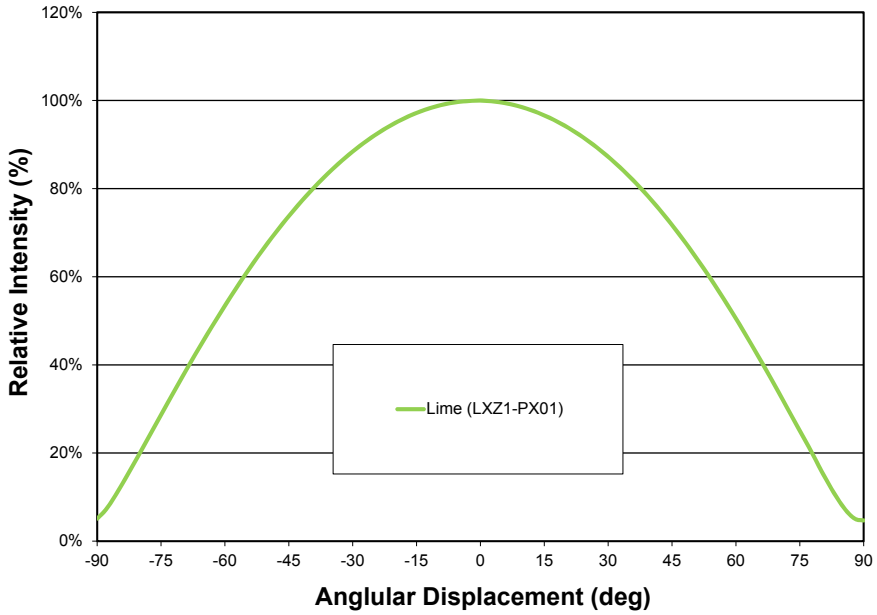

Figure 21. Typical spatial radiation pattern for LXZ1-PX01.

Polar Radiation Pattern

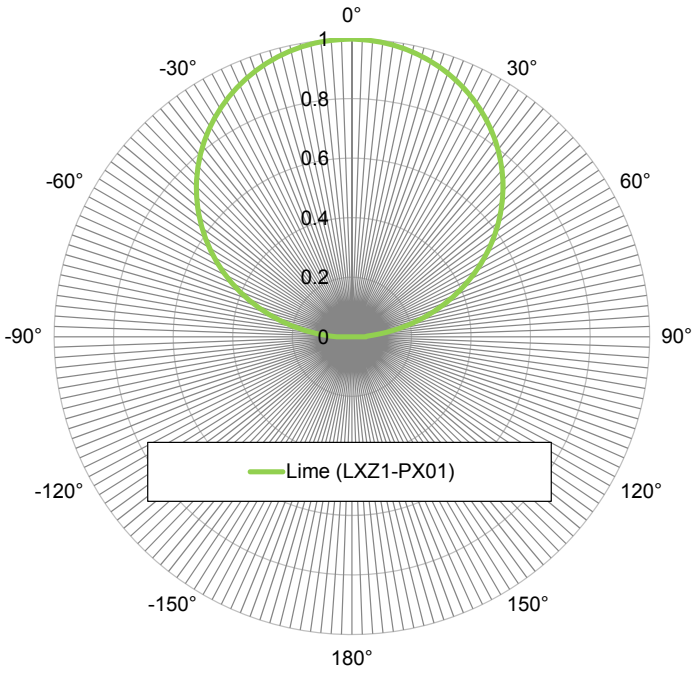

Figure 22. Typical polar radiation pattern for LXZ1-PX01.

Emitter Pocket Tape Packaging

LUXEON Z Blue, Green, Royal Blue, Cyan, and Lime

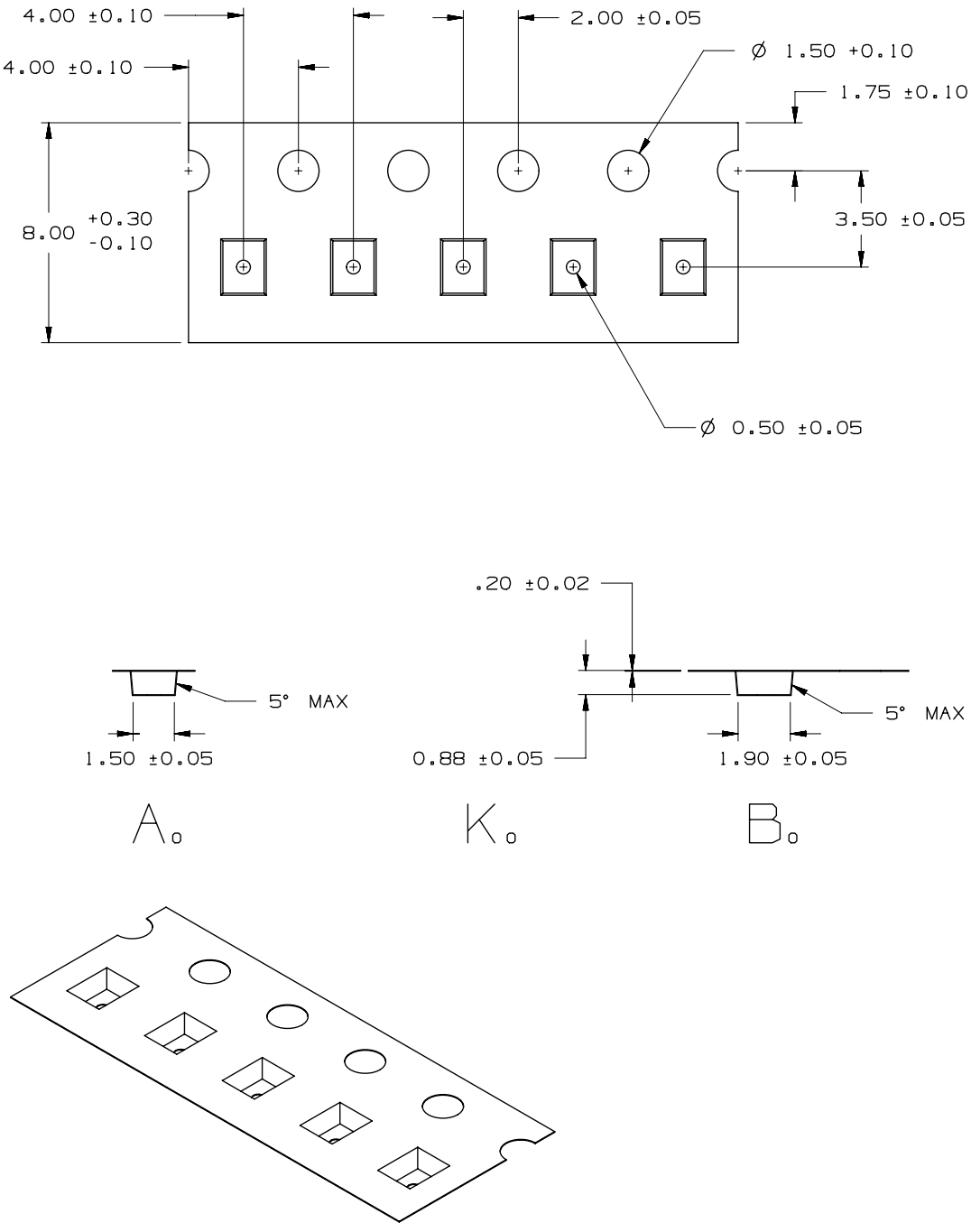

Figure 23. Emitter pocket tape packaging for LXZ1-PR01, LXZ1-PB01, LXZ1-PE01 and LXZ1-PM01.

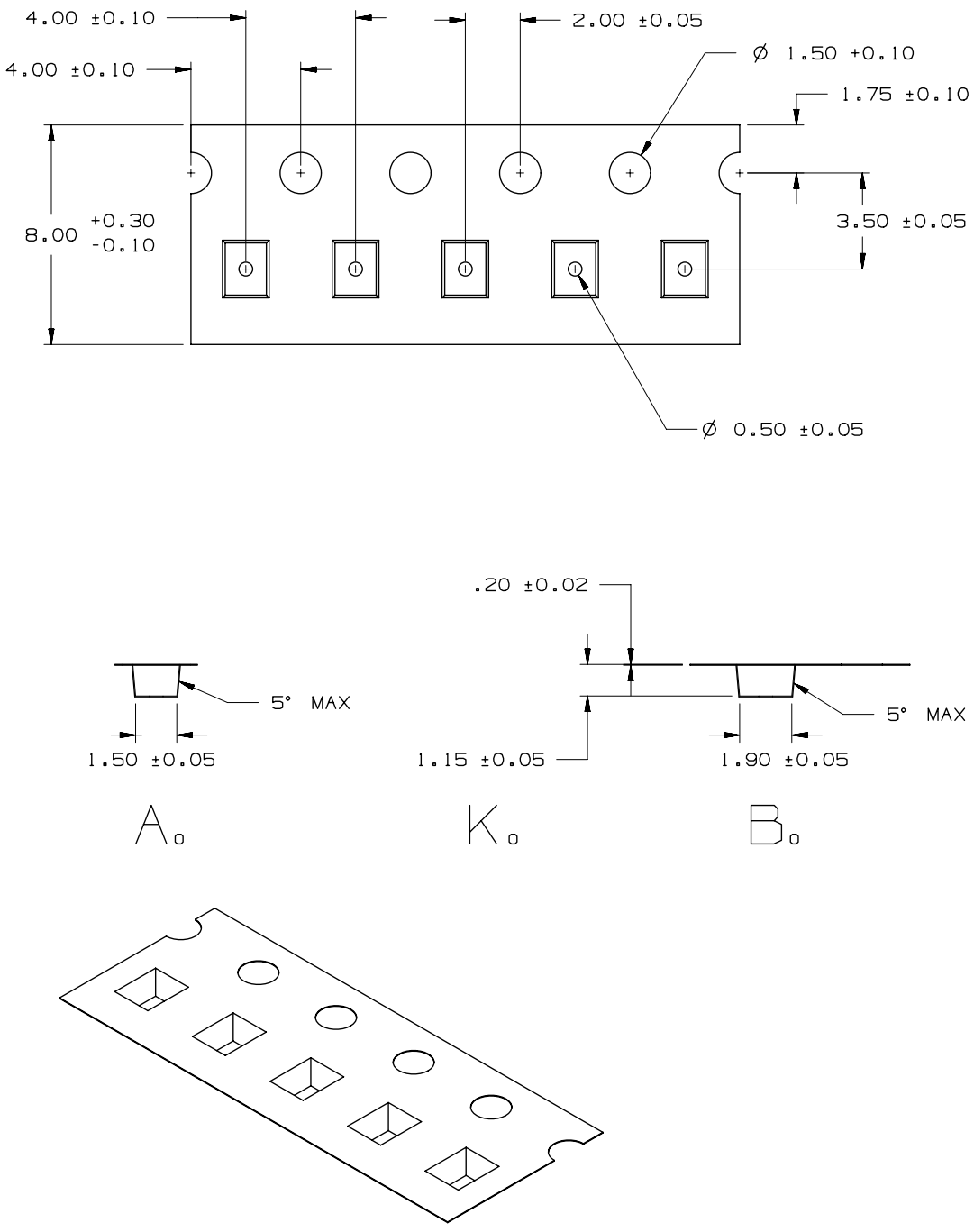

Figure 24. Emitter pocket tape packaging for LXZ1-PL01, LXZ1-PA01, LXZ1-PD01 and LXZ1-PH01.

Emitter Reel Packaging

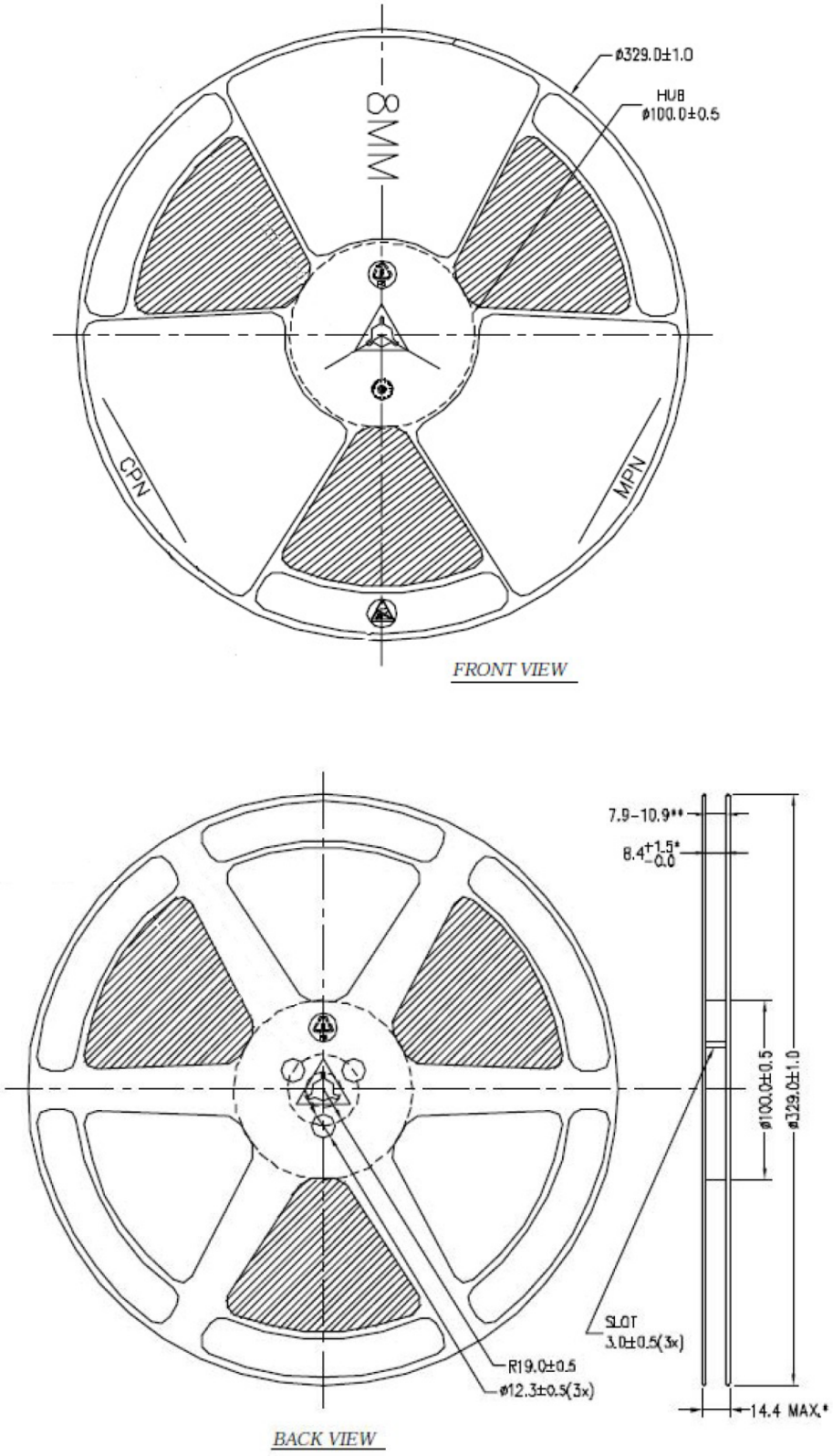

Figure 25. Emitter reel packaging.

Luminous Flux Bins

Tables 8 and 9 list the standard photometric luminous flux/radiometric power bins for LUXEON Z color emitters (tested and binned at 500 mA). Although several bins are outlined, product availability in a particular bin varies by production run and by product performance. Not all bins are available in all colors.

Table 8. LUXEON Z Luminous Flux Bins - All Colors (excluding Royal Blue and Deep Red)

Bin Code	Minimum Flux (lm)	Maximum Flux (lm)
A	24	32
B	32	40
C	40	48
D	48	56
E	56	64
F	64	72
G	72	80
H	80	88
J	88	96
K	96	104
L	104	114
M	114	124
N	124	134
P	134	144
Q	144	154
R	154	164
S	164	174
T	174	184

Table 9. LUXEON Z Radiometric Power Bins for Royal Blue and Deep Red

Bin Code	Minimum Radiometric Flux (mW)	Maximum Radiometric Flux (mW)
A	250	300
B	300	350
C	350	400
D	400	450
E	450	500
F	500	550
G	550	600
H	600	650
I	650	700

Forward Voltage Bins

The following forward voltage bins include the minimum and maximum V_f bin values for the emitter. Although several bins are outlined, product availability in a particular bin varies by production run and by product performance.

Table 10. Voltage Bins

Bin Code	Minimum Forward Voltage (V)	Maximum Forward Voltage (V)
1	1.75	2.00
2	2.00	2.25
3	2.25	2.50
4	2.50	2.75
5	2.75	3.00
6	3.00	3.25
7	3.25	3.50

Color Bins

Table 11. Dominant Wavelength Bin Structure for LUXEON Z Green (LXZ1-PM01)

Bin Code	Minimum Dominant Wavelength (nm)	Maximum Dominant Wavelength (nm)
1	520	525
2	525	530
3	530	535
4	535	540

Table 12. Dominant Wavelength Bin Structure for LUXEON Z Cyan (LXZ1-PE01)

Bin Code	Minimum Dominant Wavelength (nm)	Maximum Dominant Wavelength (nm)
1	490	498
2	498	508
6	490	495
7	495	500
8	500	505
9	505	510

Table 13. Dominant Wavelength Bin Structure for LUXEON Z Blue (LXZ1-PB01)

Bin Code	Minimum Dominant Wavelength (nm)	Maximum Dominant Wavelength (nm)
1	460	465
2	465	470
3	470	475
4	475	480
5	480	485

Table 14. Peak Wavelength Bin Structure for LUXEON Z Royal Blue (LXZ1-PR01)

Bin Code	Minimum Dominant Wavelength (nm)	Maximum Dominant Wavelength (nm)
3	440	445
4	445	450
5	450	455
6	455	460

Table 15. Dominant Wavelength Bin Structure for LUXEON Z Red (LXZ1-PD01)

Bin Code	Minimum Dominant Wavelength (nm)	Maximum Dominant Wavelength (nm)
4	620	630
5	630	640

Table 16. Dominant Wavelength Bin Structure for LUXEON Z Red-Orange (LXZ1-PH01)

Bin Code	Minimum Dominant Wavelength (nm)	Maximum Dominant Wavelength (nm)
2	610	620

Color Bins, Continued

Table 17. Dominant Wavelength Bin Structure for LUXEON Z Amber (LXZ1-PL01)

Bin Code	Minimum Dominant Wavelength (nm)	Maximum Dominant Wavelength (nm)
1	585	587
2	587	590
4	590	592
6	592	595

Table 18. Peak Wavelength Bin Structure for LUXEON Z Deep Red (LXZ1-PA01)

Bin Code	Minimum Dominant Wavelength (nm)	Maximum Dominant Wavelength (nm)
6	650	660
7	660	670

Color Bins, Continued

Table 19. Dominant Wavelength Bin Structure for LUXEON Z Lime (LXZ1-PX01)

Color	Bin Code	x	y
Lime	1	0.3819 0.4191 0.4327 0.3972	0.5055 0.5790 0.5655 0.4986

Note for Table 19:

1. LUXEON Z Lime emitters are tested and binned by x,y chromaticity coordinates.

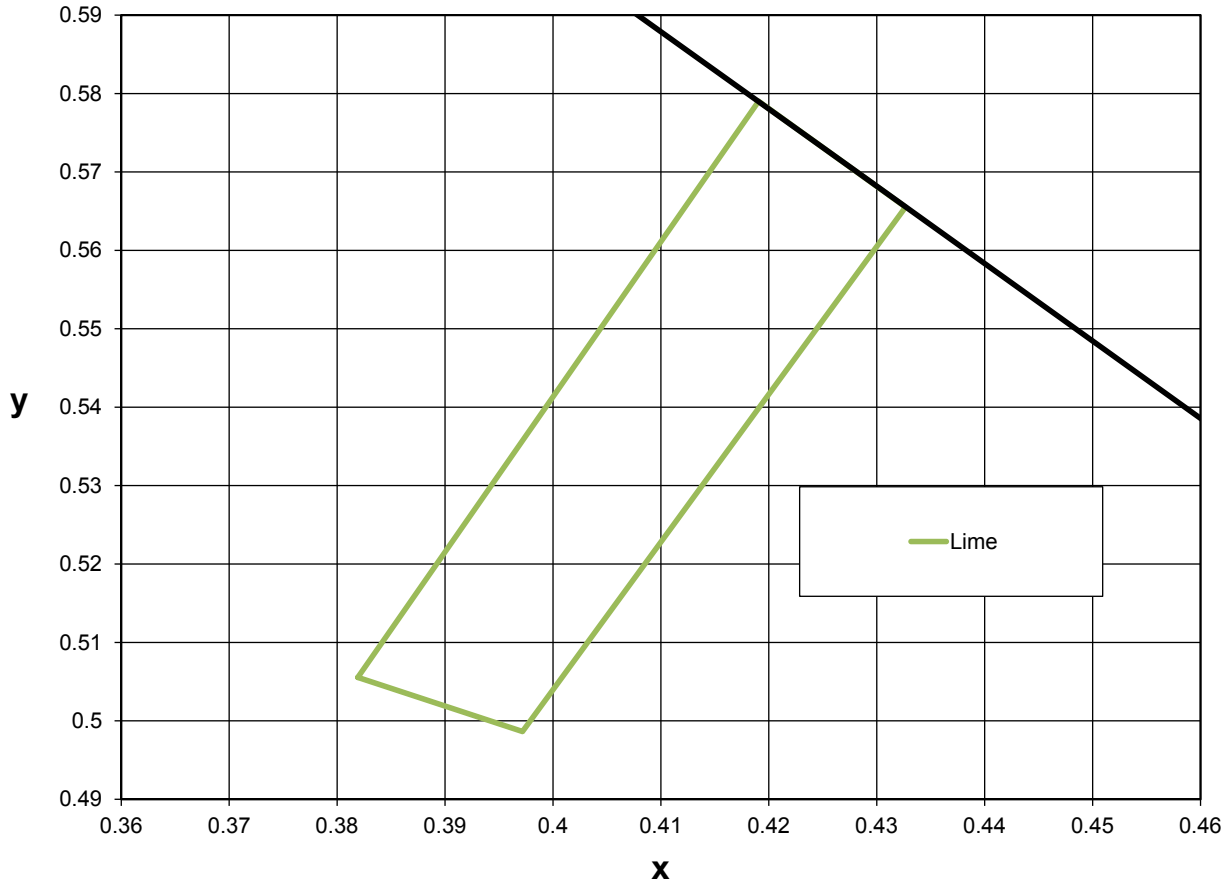

Figure 26. Color bin structure for LXZ1-PX01.

PHILIPS
LUMILEDS

Who We Are

Philips Lumileds focuses on one goal: Creating the world's highest performing LEDs. The company pioneered the use of solid-state lighting in breakthrough products such as the first LED backlit TV, the first LED flash in camera phones, and the first LED daytime running lights for cars. Today we offer the most comprehensive portfolio of high quality LEDs and uncompromising service.

Philips Lumileds brings LED's qualities of energy efficiency, digital control and long life to spotlights, downlights, high bay and low bay lighting, indoor area lighting, architectural and specialty lighting as well as retrofit lamps. Our products are engineered for optimal light quality and unprecedented efficacy at the lowest overall cost. By offering LEDs in chip, packaged and module form, we deliver supply chain flexibility to the inventors of next generation illumination.

Philips Lumileds understands that solid state lighting is not just about energy efficiency. It is about elegant design. Reinventing form. Engineering new materials. Pioneering markets and simplifying the supply chain. It's about a shared vision. Learn more about our comprehensive portfolio of LEDs at www.philipslumileds.com.

Philips Lumileds Lighting Company shall not be liable for any kind of loss of data or any other damages, direct, indirect or consequential, resulting from the use of the provided information and data. Although Philips Lumileds Lighting Company has attempted to provide the most accurate information and data, the materials and services information and data are provided "as is" and Philips Lumileds Lighting Company neither warranties, nor guarantees the contents and correctness of the provided information and data. Philips Lumileds Lighting Company reserves the right to make changes without notice.
You as user agree to this disclaimer and user agreement with the download or use of the provided materials, information and data.



©2014 Philips Lumileds Lighting Company. All rights reserved.
LUXEON is a registered trademark of the Philips Lumileds Lighting Company in the United States and other countries.

www.philipslumileds.com
www.philipslumileds.cn.com