Color and White
LED Portfolio

Illuminating
your creativity

Technical Datasheet DS105

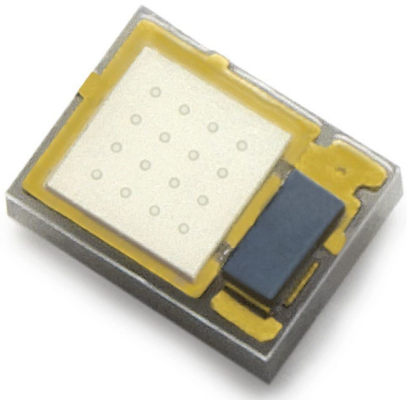

LUXEON® Z

Color and White LED Portfolio

PRELIMINARY

Introduction

LUXEON® Z is a broad portfolio of Color and White LEDs that enable never before seen lumen density, flexibility and freedom of design. Available in the full spectrum of colors from 440nm to 670nm and select white color temperatures, LUXEON Z is ideal for entertainment/stage lighting, indoor and outdoor architectural lighting, emergency vehicle lighting, remote phosphor applications and a wide spectrum of specialty lighting applications.

Features

- 2.2 mm^2 micro footprint
- Un-encapsulated
- Tested and Binned at 500 mA
- Up to 1A max drive current
- Up to 150C max Tj

Benefits

- Industry's leading Lm/mm^2 for high flux density solution
- Highest degree of design flexibility
- Superior color mixing and beam control through choice of optics
- Enables customizable light sources: linear, rectangular, circular.

PHILIPS LUMILEDS

Table of Contents

General Product Information 3
Product Nomenclature 3
Flux and Efficacy Performance Characteristics 4
Flux Performance, Binning, and Supportability 5
Optical Characteristics 6
Electrical Characteristics 7
Absolute Maximum Ratings 8
JEDEC Moisture Sensitivity 8
Reflow Soldering Characteristics 9
Mechanical Dimensions: LUXEON Z Blue/Green/Royal-Blue and Cyan Emitters 10
Mechanical Dimensions: LUXEON Z White Emitter 11
Mechanical Dimensions: LUXEON Z Red, Red-Orange, Amber and Deep Red Emitters 12
Pad Configuration 13
Solder Pad Design 13
Wavelength Characteristics 14
Typical Light Output Characteristics over Temperature 15
Typical Forward Current Characterisics 16
Typical Relative Luminous Flux 17
Typical Radiation Patterns 18
Emitter Pocket Tape Packaging 21
Emitter Reel Packaging 23
Luminous Flux Bins 24
Forward Voltage Bins 25
Color Bins 26

General Product Information

Product Nomenclature

The part number designation for LUXEON Z - Color LEDs is explained as follows:

L X Z 1 - A B C D - E F G H

Where:

A — designates radiation pattern (value P for lambertian)

B — designates color (see LUXEON Z color binning and labeling section)

C — designates color variant (0 for color variants)

D — designates test current (value 1 for 350 mA; 2 for 700 mA.)

E — open slot to accommodate additional requirements per product and part number

FGH — minimum luminous flux (lm) or radiometric power (mW) performance

The part number designation for LUXEON Z - White LEDs is explained as follows

L X Z 1 - A B C D - E F G H

Where:

A — 1st digit of Color temperature (e.g. 4 for 4000K, 3 for 3000K)

B — 2nd digit of Color temperature (e.g.: 0 for 4000K, 0 for 3000K)

C — 1st digit of CRI (e.g.: 6 for 60 CRI, 8 for 85 CRI)

D — 2nd digit of CRI (e.g.: 0 for 60 CRI, 5 for 85 CRI)

E — open slot to accommodate additional requirements per product and part number

FGH — minimum luminous flux (lm)

Flux and Efficacy Performance Characteristics

Luminous Flux Characteristics for LUXEON Z Color Portfolio, Thermal Pad Temperature =25°C

Table 1.

Color	Part Number	Min Luminous Flux (lm) or Radiometric Power (mW)	Typ Flux (lm/mw)	Typ Efficacy (lm/W) or WPE	Typ Luminous Flux (lm) or Radiometric Power (mW)	Typ Efficacy (lm/W) or WPE
		Performance @ 500 mA			Performance @ 700 mA	
Green	LXZ1-PM01-0104	104				
	LXZ1-PM01-0096	96	98	63	120	53
	LXZ1-PM01-0088	88	92	59	113	50
	LXZ1-PM01-0080	80	84	54	103	46
	LXZ1-PM01-0072	72	76	49	93	41
Cyan	LXZ1-PE01-0080	80	81	52	100	44
	LXZ1-PE01-0072	72	70	45	86	38
	LXZ1-PE01-0064	64	68	44	84	38
	LXZ1-PE01-0056	56	60	39	74	33
	LXZ1-PE01-0048	48	54	35	67	30
Blue	LXZ1-PB01-0048	48	50	34	65	30
	LXZ1-PB01-0040	40	44	30	57	27
	LXZ1-PB01-0032	32	38	26	49	23
	LXZ1-PB01-0024	24	30	21	39	19
Royal-Blue	LXZ1-PR01-0600	600	620	43%	823	40%
	LXZ1-PR01-0550	550	570	40%	757	37%
	LXZ1-PR01-0500	500	530	37%	704	35%
	LXZ1-PR01-0450	450	480	33%	637	31%
Deep Red	LXZ1-PA01-0350	350	360	34%	454	31%
	LXZ1-PA01-0300	300	330	32%	416	29%
	LXZ1-PA01-0250	250	280	26%	353	24%
Red	LXZ1-PD01-0056	56	57	54	77	49
	LXZ1-PD01-0048	48	52	50	70	46
	LXZ1-PD01-0040	40	44	42	60	38
	LXZ1-PD01-0032	32	37	35	50	32
Red-Orange	LXZ1-PH01-0064	64	66	63	90	58
	LXZ1-PH01-0056	56	60	57	82	53
	LXZ1-PH01-0048	48	54	51	73	47
Amber	LXZ1-PL01-0064	64	66	63	90	59
	LXZ1-PL01-0056	56	60	57	82	53
	LXZ1-PL01-0048	48	54	51	73	48
	LXZ1-PL01-0040	40	46	44	63	41

Notes for Table 1:

1. Minimum luminous flux or radiometric power performance guaranteed within published operating conditions. Philips Lumileds maintains a tolerance of ± 6.5% on flux and power measurements.
2. Typical luminous flux or radiometric power performance when device is operated within published operating conditions.

Flux and Efficacy Performance Characteristics, Continued

Luminous Flux Characteristics for LUXEON Z White, Thermal Pad Temperature =25°C

Table 2.

White	Part Number	Min Luminous Flux (lm) or Radiometric Power (mW)	Typ Flux (lm/mw)	Typ Efficacy (lm/W) or WPE	Typ Luminous Flux (lm) or Radiometric Power (mW)	Typ Efficacy (lm/W) or WPE
		Performance @ 500 mA			Performance @ 700 mA	
4000K/ 70 CRI	LXZ1-4070-0144	144	148	102	194	94
	LXZ1-4070-0134	134	140	96	183	88
	LXZ1-4070-0124	124	130	90	170	83
	LXZ1-4070-0114	114	122	85	160	78

Flux Performance, Binning, and Supportability

LEDs are produced with semiconductor technology that is subject to process variation, yielding a range of flux performance that is approximately Gaussian in nature. In order to provide customers with fine granularity within the overall flux distribution, Philips Lumileds separates LEDs into fixed, easy to design with, minimum luminous flux bins. To verify supportability of parts chosen for your application design, please consult your Philips Lumileds or Future Lighting Solutions sales representative.

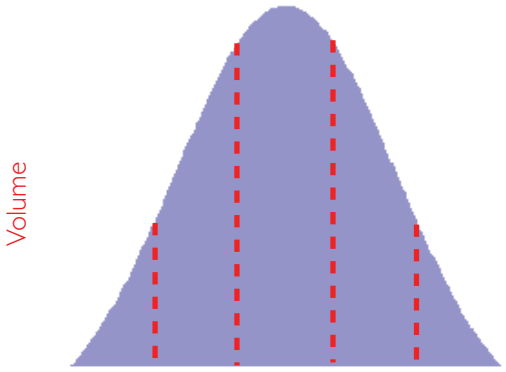

Optical Characteristics

LUXEON Z Color Portfolio at Test Current [1] Thermal Pad Temperature = 25°C

Table 3.

Color	Dominant Wavelength [2] λ_D, or Peak Wavelength [3] λ_P Min.	Typ.	Max.	Typical Spectral Half-width[4] (nm) $\Delta\lambda_{1/2}$	Typical Temperature Coefficient of Dominant or Peak Wavelength (nm/°C) $\Delta\lambda_D / \Delta T_J$	Typical Total Included Angle [5] (degrees) $\theta_{0.90V}$	Typical Viewing Angle [6] (degrees) 2θ 1/2
Green [7]	520.0 nm	530.0 nm	550.0 nm				
Cyan [7]	490.0 nm	505.0 nm	520.0 nm				
Blue [7]	460.0 nm	470.0 nm	490.0 nm				
Royal-Blue [3] [7]	440.0 nm	447.5 nm	460.0 nm				
Red [8]	620.0 nm	627.0 nm	645.0 nm				
Deep Red [8]	650.0 nm	655.0 nm	670.0 nm				
Red-Orange [8]	610.0 nm	617.0 nm	620.0 nm				
Amber [8]	584.5 nm	590.0 nm	597.0 nm				
PC Amber [7]	588.0 nm	591.0 nm	592.0 nm				

Notes for Table 3:

1. LXML-PR01-XXXX, LXM2-PL01-XXXX and LXM3-PD01-XXXX emitters are tested at 350 mA, LXML-PR02-XXXX emitters are tested at 700 mA.
2. Dominant wavelength is derived from the CIE 1931 Chromaticity diagram and represents the perceived color. Philips Lumileds maintains a tolerance of ± 0.5 nm for dominant wavelength measurements.
3. Royal-blue and Deep Red LEDs are binned by radiometric power and peak wavelength rather than photometric lumens. Philips Lumileds maintains a tolerance of ± 2nm for peak wavelength measurements.
4. Spectral width at ½ of the peak intensity.
5. Total angle at which 90% of total luminous flux is captured.
6. Viewing angle is the off axis angle from lamp centerline where the luminous intensity is ½ of the peak value.
7. PC amber, green, cyan, blue and royal-blue products are built with Indium Gallium Nitride (InGaN).
8. All red, deep red, red-orange, and amber are built with Aluminum Indium Gallium Phosphide (AlInGaP).

Electrical Characteristics

Electrical Characteristics at 500 mA for LUXEON Z Colors, Thermal Pad Temperature = 25°C

Table 4.

Color	Part Number	Forward Voltage V_f [1] @ 500 mA (V) Min.	Typ.	Max.	Forward Voltage V_f @ 700 mA Typ.	Typical Temperature Coefficient of Forward Voltage [2] (mV/°C) $\Delta V_f / \Delta T_J$	Typical Thermal Resistance Junction to Thermal Pad (°C/W) $R\theta_{J-C}$
Green	LXZ1-PM01	2.50	3.10	3.50			
Cyan	LXZ1-PE01	3.50	3.10	3.50			
Blue	LXZ1-PB01	3.50	3.00	3.50			
Royal-Blue	LXML-PR01	3.50	2.90	3.50			
Red	LXZ1-PD01	1.75	2.15	2.75			
Deep Red	LXZ1-PA01	1.75	2.15	2.75			
Red-Orange	LXZ1-PH01	1.75	2.15	2.75			
Amber	LXZ1-PL01	1.75	2.15	2.75			

Notes for Table 4:

1. LUXEON Z royal-blue measured between 25°C = Tj = 110°C and If = 700 mA.
2. Measured between 25°C = T_J = 110°C at I_f = 350 mA.
3. Philips Lumileds maintains a tolerance of ±0.06V on forward voltage measurements.

Electrical Characteristics at 500 mA for LUXEON Z White, Thermal Pad Temperature = 25°C

Table 5.

White	Part Number	Forward Voltage V_f [1] @ 500 mA (V) Min.	Typ.	Max.	Forward Voltage V_f @ 700 mA Typ.	Typical Temperature Coefficient of Forward Voltage [2] (mV/°C) $\Delta V_f / \Delta T_J$	Typical Thermal Resistance Junction to Thermal Pad (°C/W) $R\theta_{J-C}$
4000K/70CRI	LXZ1-4070	2.50	2.90	3.50			

Absolute Maximum Ratings

Table 6.

Parameter	Green/Cyan/ Blue/Royal-Blue	Red/Deep-Red Red-Orange/Amber	White 4000K
DC Forward Current (mA)	1000	700	700
Peak Pulsed Forward Current (mA)	1000	700	700
ESD Sensitivity		JESD22-A114-B	
LED Junction Temperature [1]	150°C	135°C	130°C
Operating Case Temperature at 350 mA	-40°C - 135°C	-40°C - 120°C	-40°C - 110°C
Storage Temperature	-40°C - 135°C	-40°C - 135°C	-40°C - 135°C
Soldering Temperature	JEDEC 020c 260°C	JEDEC 020c 260°C	JEDEC 020c 260°C
Allowable Reflow Cycles	3	3	3
	Autoclave Conditions 121°C at 2 ATM 100% Relative Humidity for 96 Hours Maximum		
Reverse Voltage (Vr)	LUXEON Rebel Color Portfolio LEDs are not designed to be driven in reverse bias.		

Notes for Table 6:

1. Proper current derating must be observed to maintain junction temperature below the maximum.
2. The maximum rating for LUXEON Z royal-blue is 1200 mA with peak pulsed forward current not to exceed 60 seconds.

JEDEC Moisture Sensitivity

Table 7.

Level	Floor Life		Soak Requirements	
			Standard	
	Time	Conditions	Time (hours)	Conditions
1	unlimited	≤ 30°C / 85% RH	168 + 5 / -0	85°C / 85% RH

Reflow Soldering Characteristics

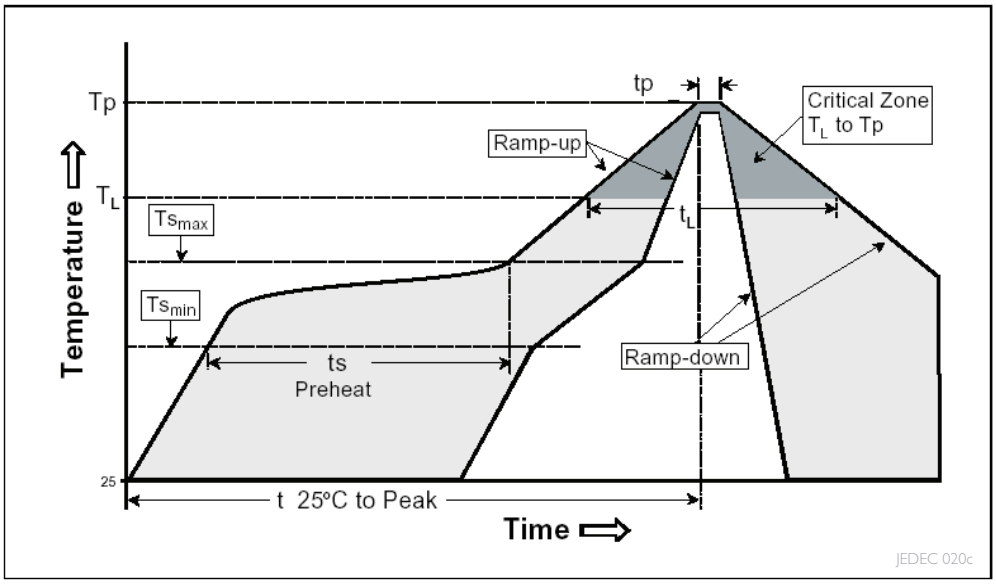

Table 8.

Profile Feature	Lead Free Assembly
Average Ramp-Up Rate (Ts_{max} to T_p)	3°C / second max
Preheat Temperature Min (Ts_{min})	150°C
Preheat Temperature Max (Ts_{max})	200°C
Preheat Time (ts_{min} to ts_{max})	60 - 180 seconds
Temperature T_L (t_L)	217°C
Time Maintained Above Temperature T_L (t_L)	60 - 150 seconds
Peak / Classification Temperature (T_P)	260°C
Time Within 5°C of Actual Peak Temperature (t_p)	20 - 40 seconds
Ramp-Down Rate	6°C / second max
Time 25°C to Peak Temperature	8 minutes max

Note for Table 8:

- All temperatures refer to the application Printed Circuit Board (PCB), measured on the surface adjacent to the package body.

Mechanical Dimensions: LUXEON Z Blue/Green/Royal-Blue and Cyan Emitters

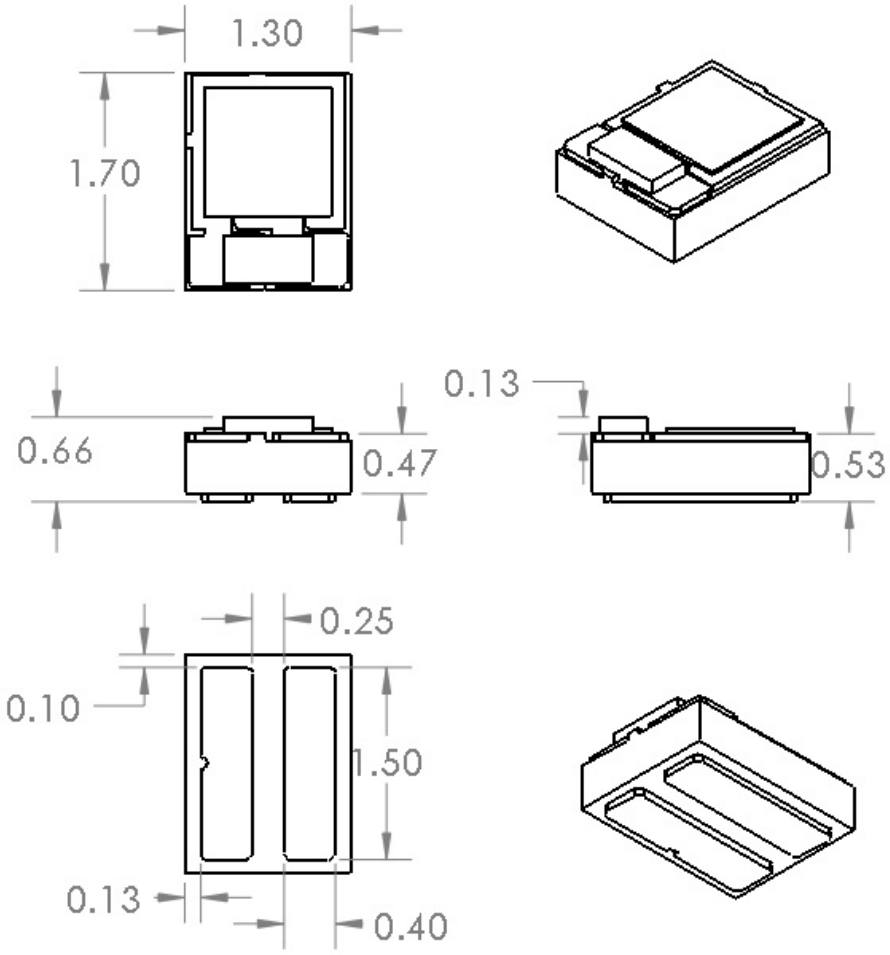

Figure 1. Package outline drawing.

Notes for Figure 1:

- To avoid damage, do not handle the device by the emitter lens.
- Drawings not to scale.
- All dimensions are in millimeters.
- The thermal pad is electrically isolated from the anode and cathode contact pads.

Mechanical Dimensions: LUXEON Z White Emitter

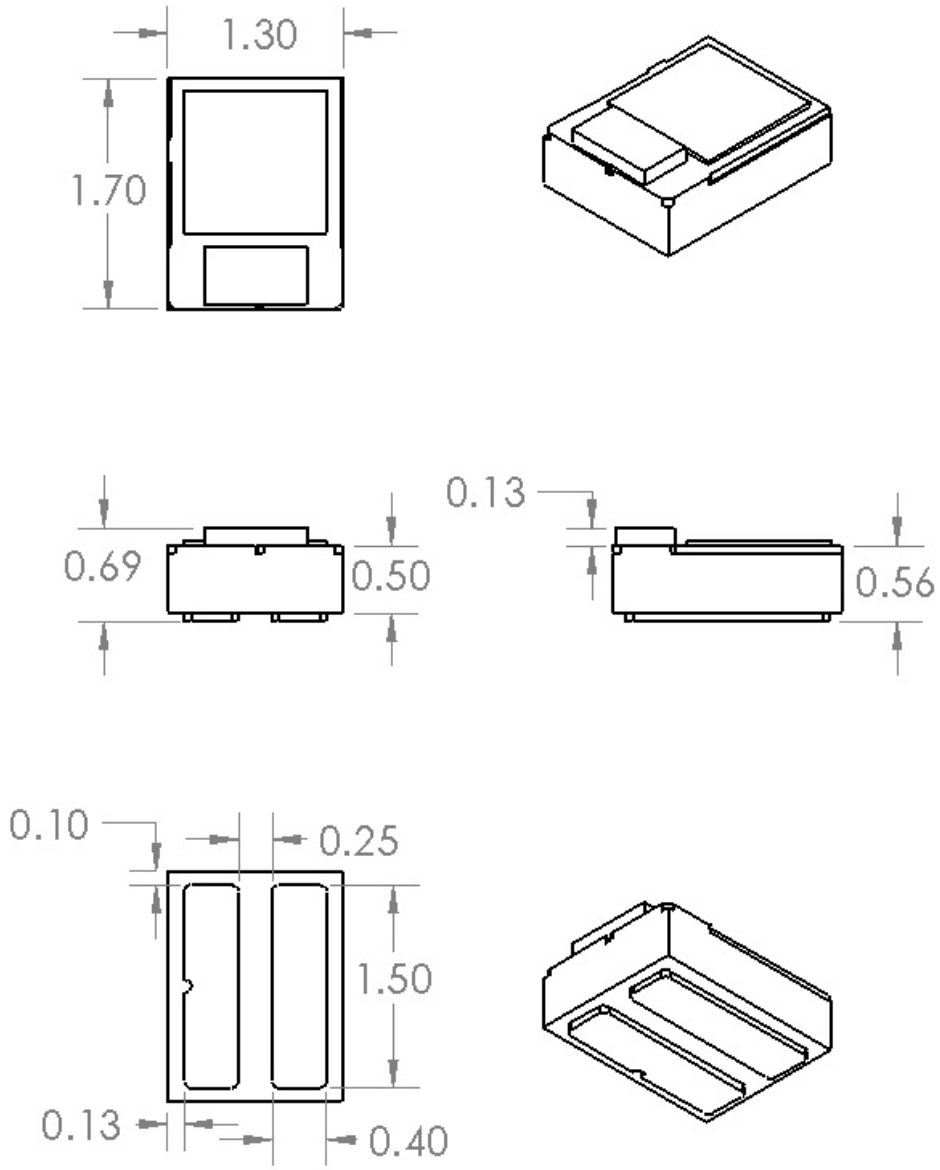

Figure 2. Package outline drawing.

Notes for Figure 2:

- To avoid damage, do not handle the device by the emitter lens.
- Drawings not to scale.
- All dimensions are in millimeters.
- The thermal pad is electrically isolated from the anode and cathode contact pads.

Mechanical Dimensions: LUXEON Z Red, Red-Orange, Amber and Deep Red Emitters

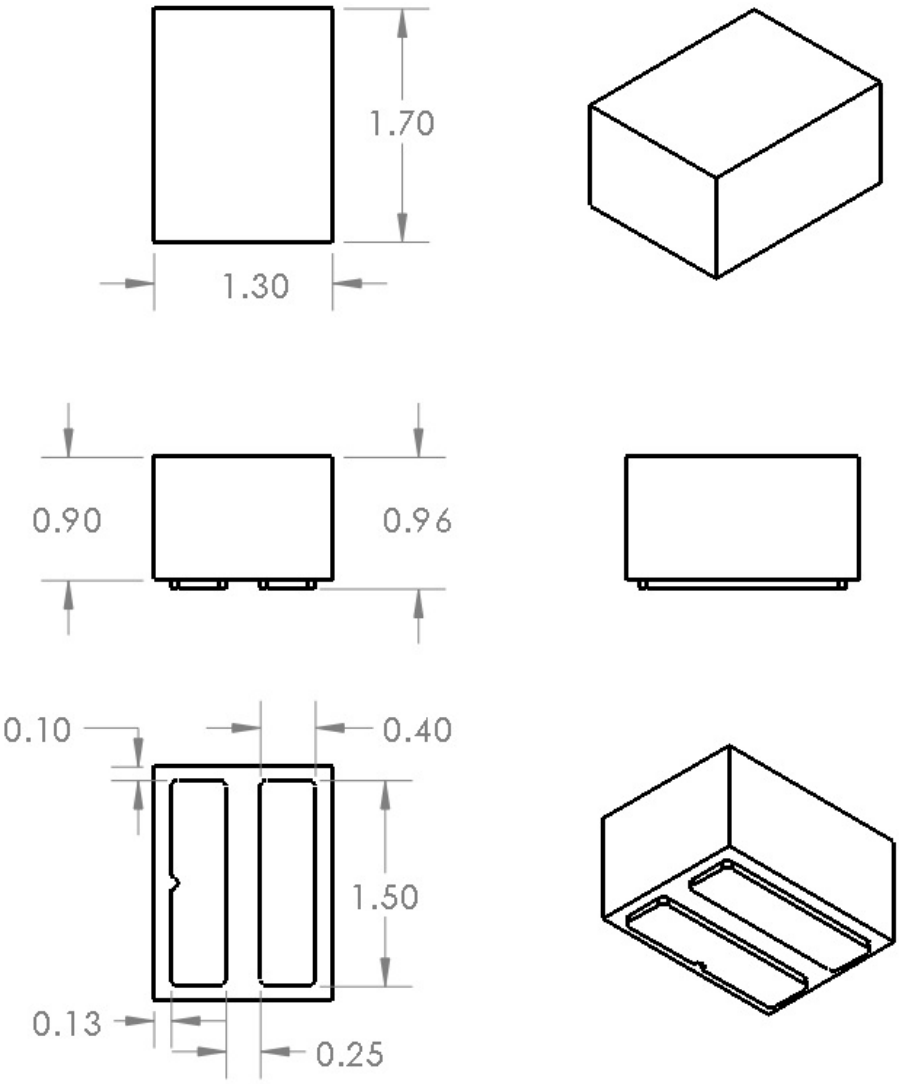

Figure 3. Package outline drawing.

Notes for Figure 3:

- To avoid damage, do not handle the device by the emitter lens.
- Drawings not to scale.
- All dimensions are in millimeters.
- The thermal pad is electrically isolated from the anode and cathode contact pads.

Pad Configuration

Data coming soon.

Figure 4. Pad configuration.

Solder Pad Design

Data coming soon.

Figure 5. Solder pad layout.

Wavelength Characteristics

Green, Cyan, Blue, all Royal-Blue, Red, Red-Orange and Amber at Test Current, Thermal Pad Temperature = 25°C

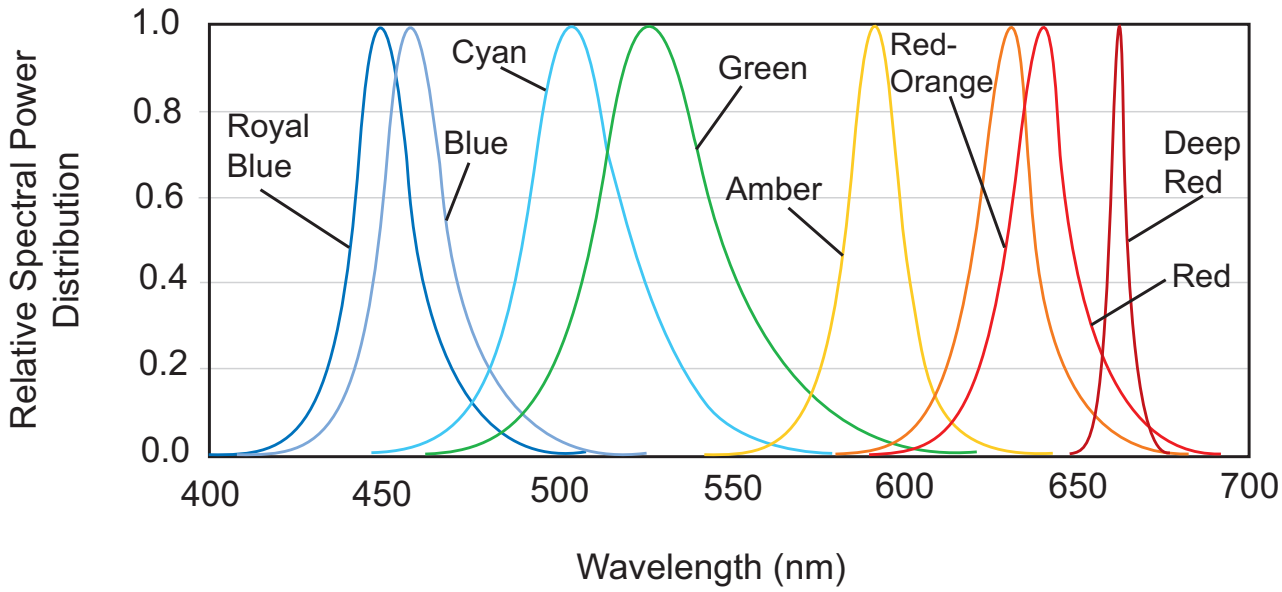

Figure 6. Relative intensity vs. wavelength.

Typical Light Output Characteristics over Temperature

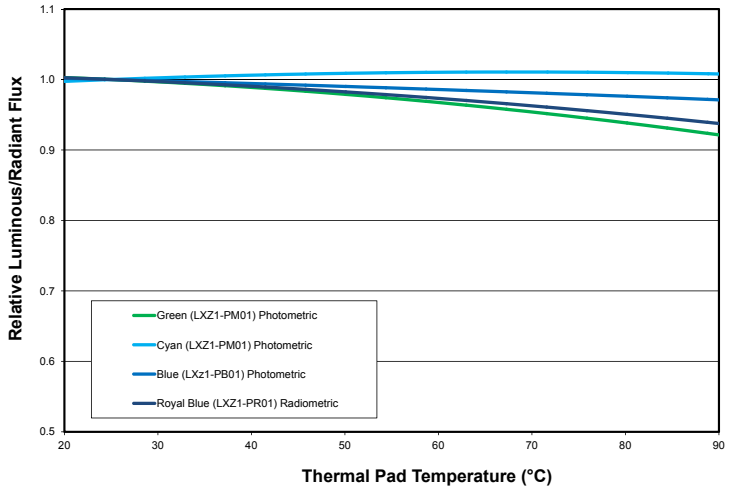

Figure 7. Relative light output vs. thermal pad temperature for cyan, blue, green and royal-blue LUXEON Z at Test Current.

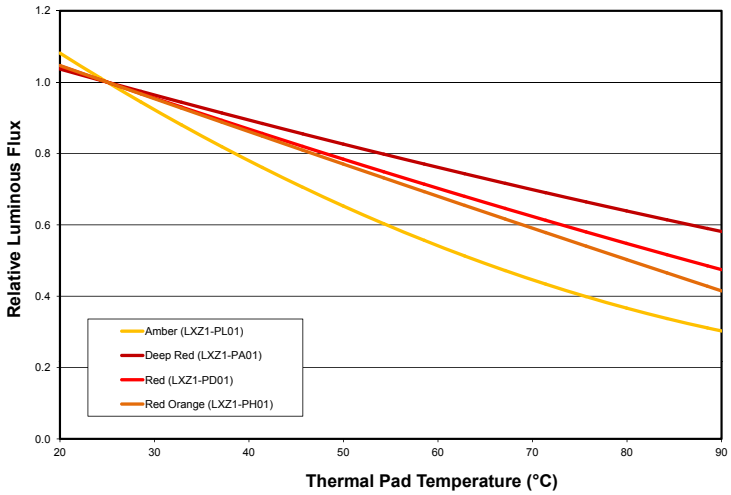

Figure 8. Relative light output vs. thermal pad temperature for red, deep red, red-orange and amber LUXEON Z at Test Current.

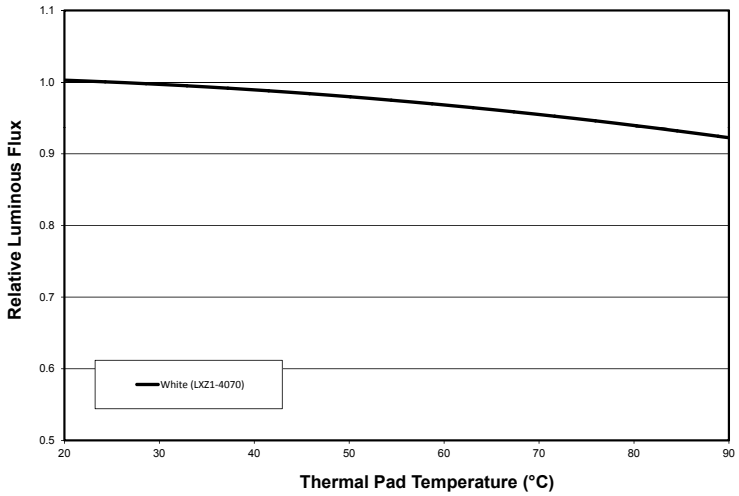

Figure 9. Relative light output vs. thermal pad temperature for white LUXEON Z at Test Current.

Typical Forward Current Characterisics

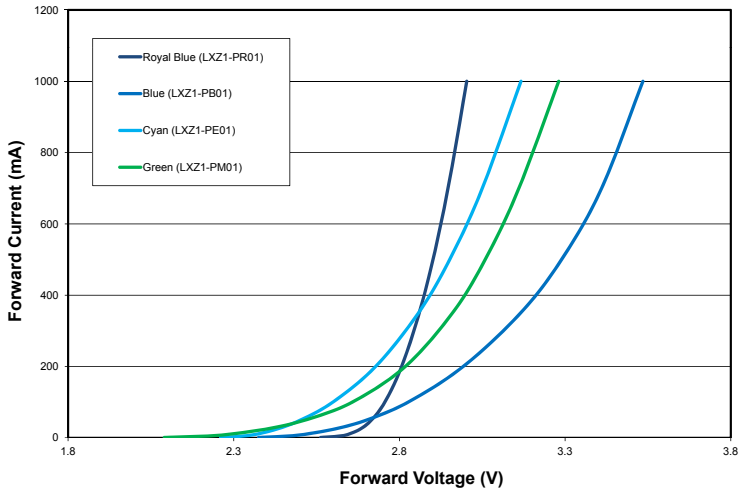

Figure 10. Forward current vs. forward voltage for green, cyan, blue and royal-blue LUXEON Z at Thermal Pad Temperature = 25°C.

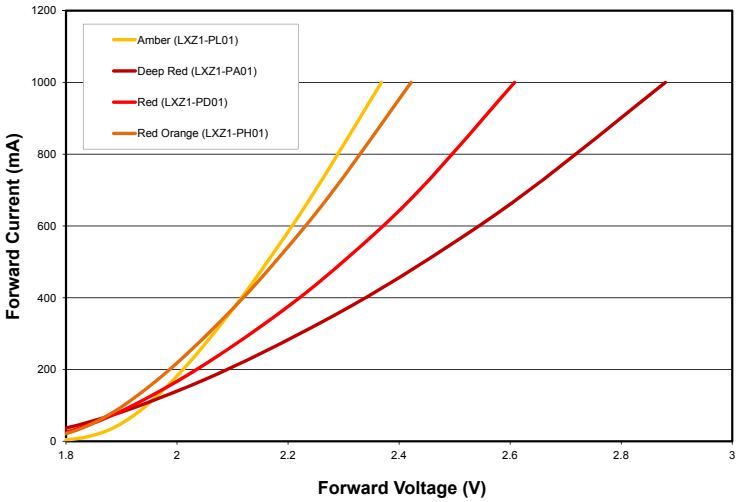

Figure 11. Forward current vs. forward voltage for red, deep red, red-orange and amber LUXEON Z at Thermal Pad Temperature = 25°C.

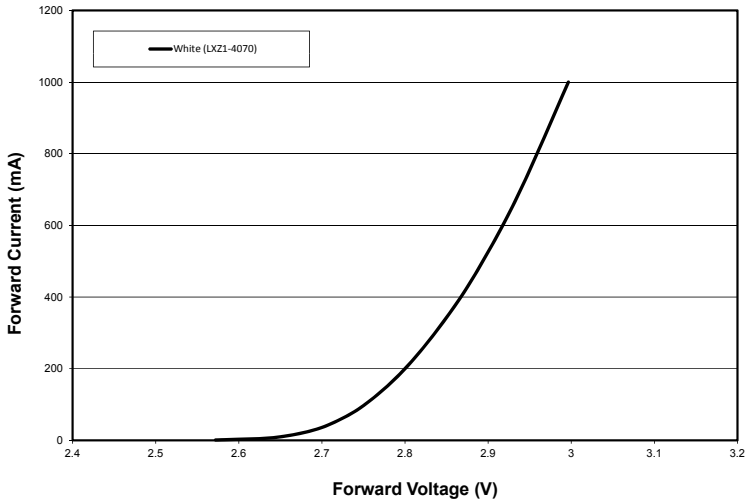

Figure 12. Forward current vs. forward voltage for white LUXEON Z at Thermal Pad Temperature = 25°C.

Typical Relative Luminous Flux

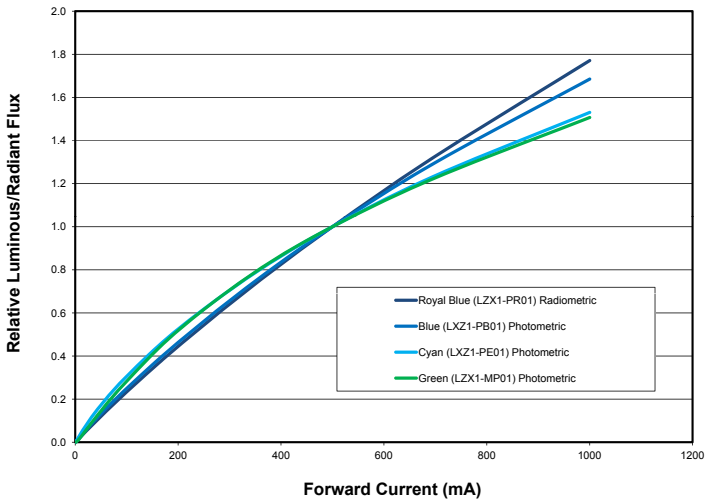

Figure 13. Typical relative luminous flux vs. forward current for green, cyan, blue & royal-blue LUXEON Z at thermal pad temperature = 25°C.

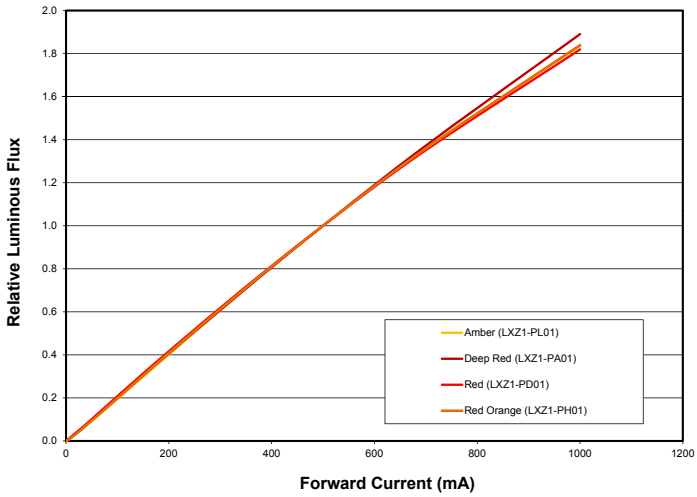

Figure 14. Typical relative luminous flux vs. forward current for red, deep red, red-orange & amber LUXEON Z at thermal pad temperature = 25°C.

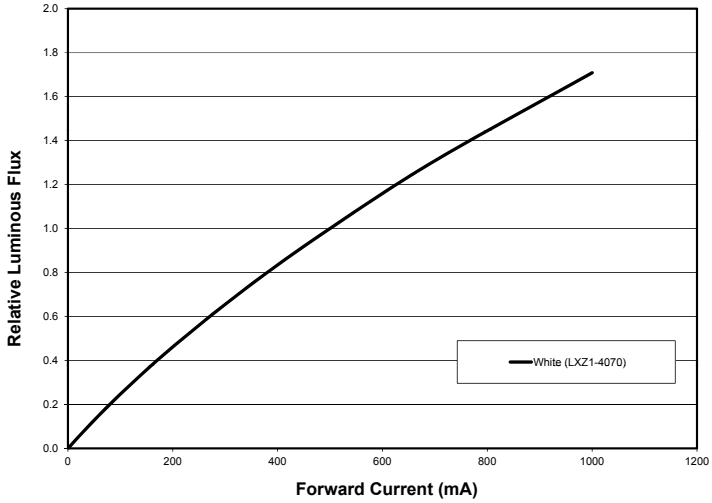

Figure 15. Typical relative luminous flux vs. forward current for white LUXEON Z at thermal pad temperature = 25°C.

Typical Radiation Patterns

LUXEON Z Typical Spatial Radiation Pattern for Green, Cyan, Blue and Royal-Blue

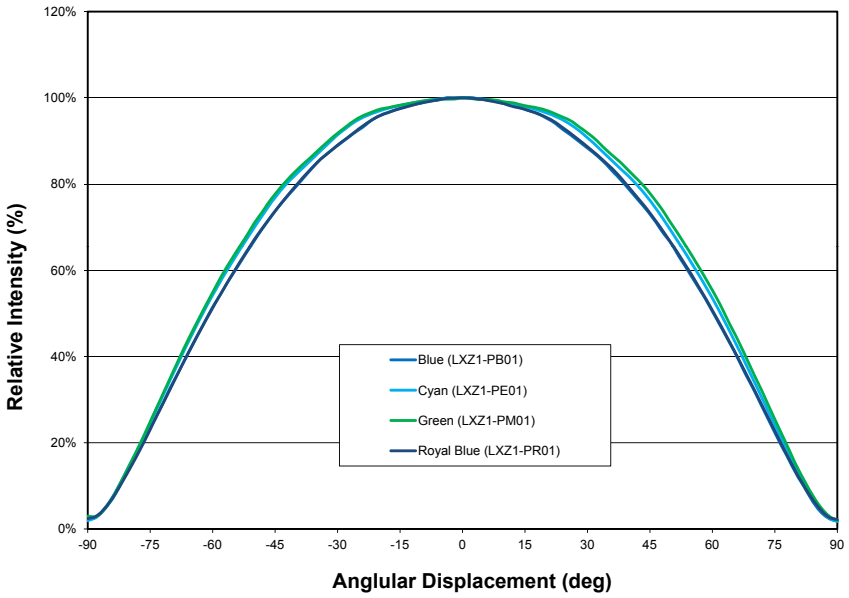

Figure 16. Typical spatial radiation pattern for green, cyan, blue and royal-blue LUXEON Z.

LUXEON Z Typical Polar Radiation Pattern for Green, Cyan, Blue and Royal-Blue

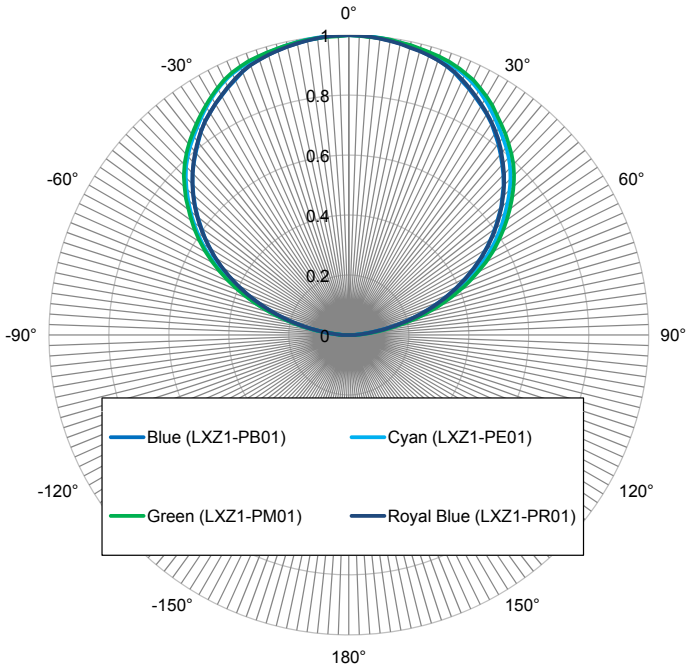

Figure 17. Typical polar radiation pattern for green, cyan, blue and royal-blue LUXEON Z.

LUXEON Z Typical Spatial Radiation Pattern for Red, Red-Orange and Deep Red

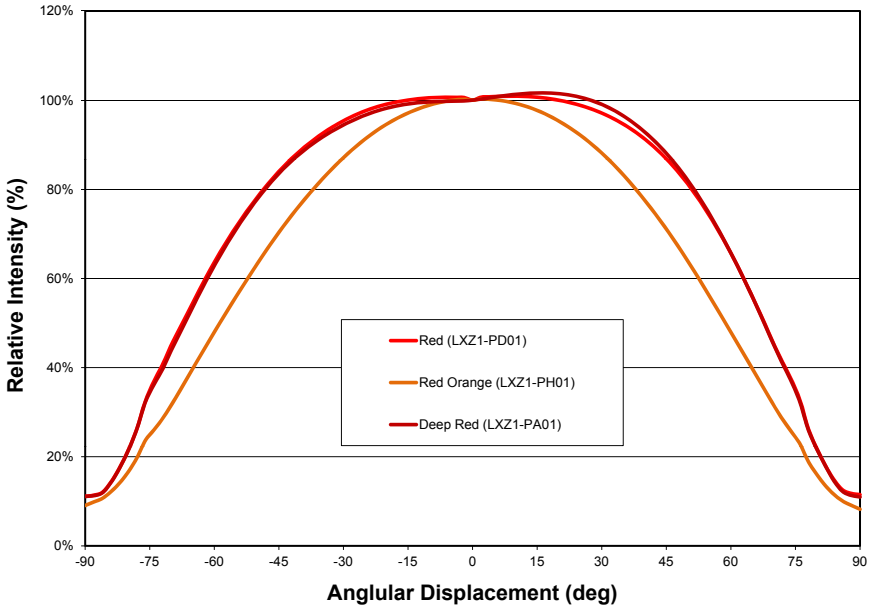

Figure 18. Typical spatial radiation pattern for red, red-orange and deep red.

LUXEON Z Typical Polar Radiation Pattern for Red, Red-Orange and Deep Red

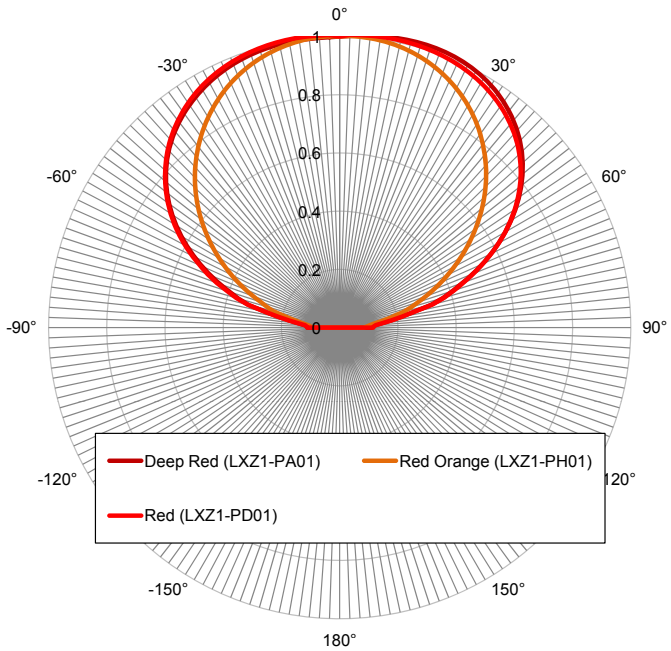

Figure 19. Typical polar radiation pattern for red, red-orange and deep red.

LUXEON Z Typical Spatial Radiation Pattern for Amber

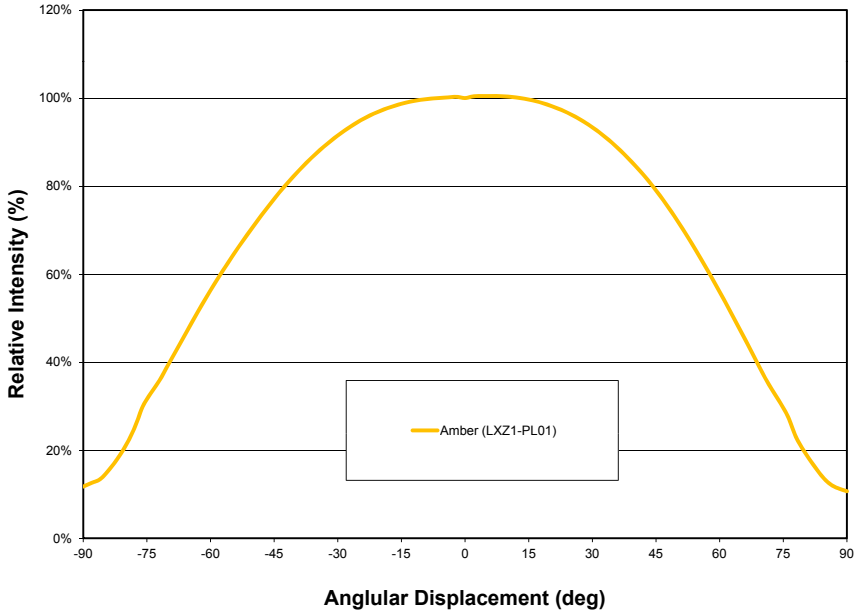

Figure 20. Typical spatial radiation pattern for deep red lambertian.

LUXEON Z Typical Polar Radiation Pattern for Amber

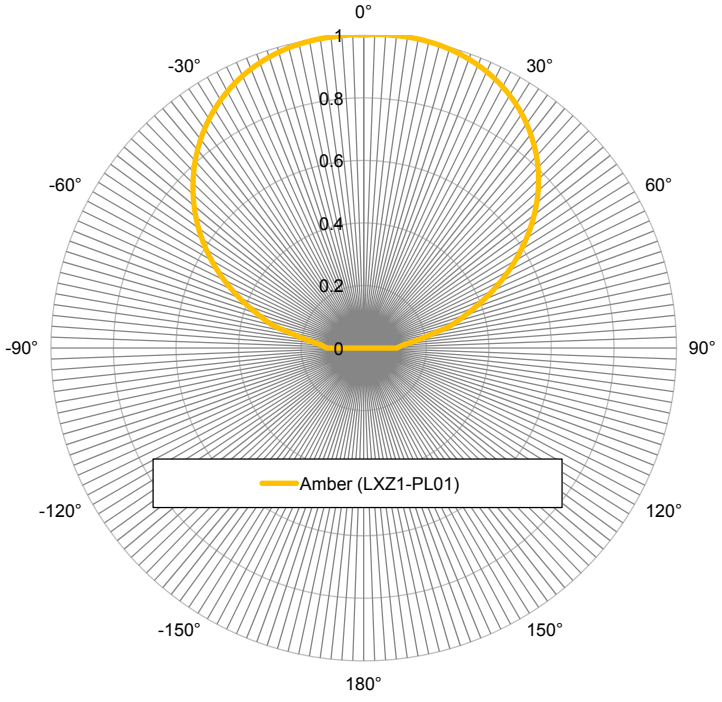

Figure 21. Typical polar radiation pattern for deep red lambertian.

Emitter Pocket Tape Packaging

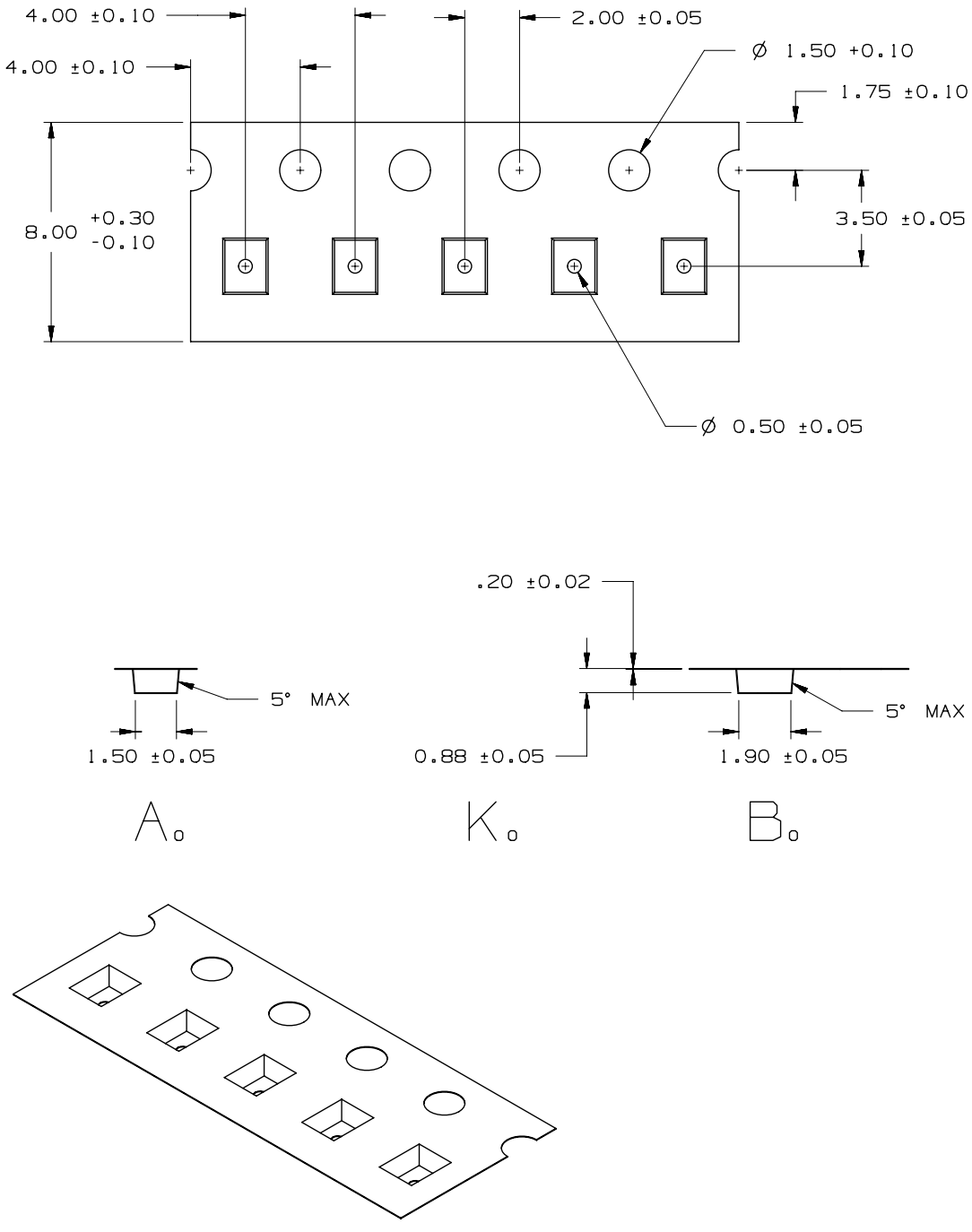

Figure 22. Emitter pocket tape packaging for Blue, Green, Royal-Blue and Cyan.

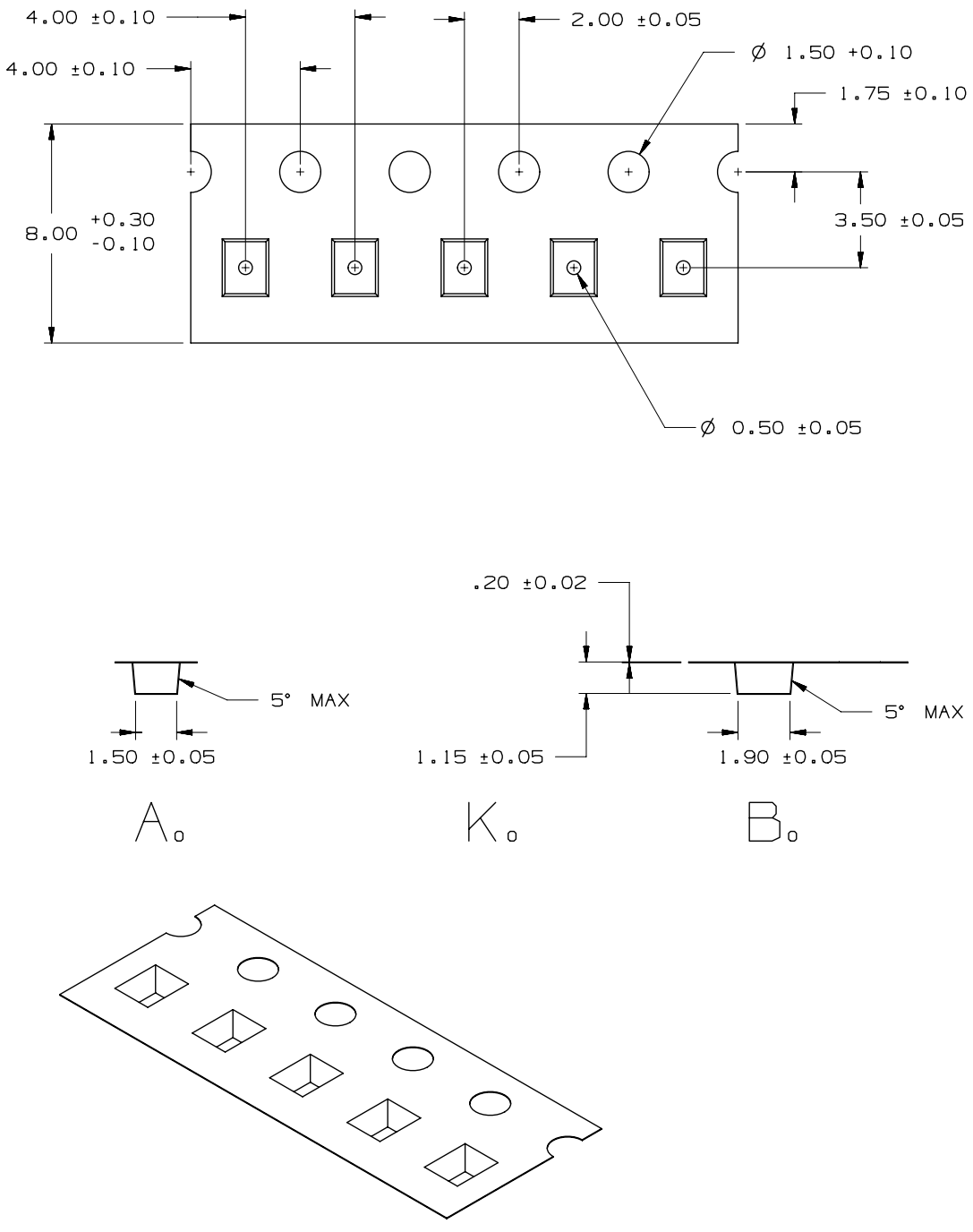

Figure 23. Emitter pocket tape packaging for Red, Red-Orange, Amber and Deep Red.

Emitter Reel Packaging

Figure 24. Emitter reel packaging.

Luminous Flux Bins

Tables 9 and 10 list the standard photometric luminous flux/radiometric power bins for LUXEON Z colors and LUXEON Z white emitters (tested and binned at 350 mA and 700 mA respectively). Although several bins are outlined, product availability in a particular bin varies by production run and by product performance. Not all bins are available in all colors.

Table 9.

LUXEON Z Flux Bins - All Colors and White

Bin Code	Minimum Flux (lm)	Maximum Flux (lm)
A	24	32
B	32	40
C	40	48
D	48	56
E	56	64
F	64	72
G	72	80
H	80	88
J	88	96
K	96	104
L	104	114
M	114	124
N	124	134
P	134	144
Q	144	154
R	154	164

Table 10.

LUXEON Z Radiometric Power Bins for Royal-Blue and Deep Red

Bin Code	Minimum Radiometric Flux (mW)	Maximum Radiometric Flux (mW)
A	250	300
B	300	350
C	350	400
D	400	450
E	450	500
F	500	550
G	550	600
H	600	650
I	650	700
J	700	750
K	750	800

Forward Voltage Bins

The following forward voltage bins include the minimum and maximum V_f bin values for the emitter. Although several bins are outlined, product availability in a particular bin varies by production run and by product performance.

Table 11. Voltage Bins

	V_f Bins	
Bin Code	Minimum Forward Voltage (V)	Maximum Forward Voltage (V)
1	1.75	2.00
2	2.00	2.25
3	2.25	2.50
4	2.50	2.75
5	2.75	3.00
6	3.00	3.25
7	3.25	3.50

Color Bins

Dominant Wavelength Bin Structure for LUXEON Z Green

Table 12.

Bin Code	Minimum Dominant Wavelength (nm)	Maximum Dominant Wavelength (nm)
1	520	525
2	525	530
3	530	535
4	535	540

Dominant Wavelength Bin Structure for LUXEON Z Cyan

Table 13.

Bin Code	Minimum Dominant Wavelength (nm)	Maximum Dominant Wavelength (nm)
1	490	498
2	498	508

Dominant Wavelength Bin Structure for LUXEON Z Blue

Table 14.

Bin Code	Minimum Dominant Wavelength (nm)	Maximum Dominant Wavelength (nm)
1	460	465
2	465	470
3	470	475
4	475	480

Dominant Wavelength Bin Structure for LUXEON Z Royal-Blue

Table 15.

Bin Code	Minimum PeakWavelength (nm)	Maximum Peak Wavelength (nm)
3	440	445
4	445	450
5	450	455
6	455	460

Dominant Wavelength Bin Structure for LUXEON Z Red

Table 16.

Bin Code	Minimum Dominant Wavelength (nm)	Maximum Dominant Wavelength (nm)
4	620	630
5	630	640

Dominant Wavelength Bin Structure for LUXEON Z Red-Orange

Table 17.

Bin Code	Minimum Dominant Wavelength (nm)	Maximum Dominant Wavelength (nm)
2	610	620

Dominant Wavelength Bin Structure for LUXEON Z Amber

Table 18.

Bin Code	Minimum Dominant Wavelength (nm)	Maximum Dominant Wavelength (nm)
1	584	587
2	587	590
4	590	592
6	592	595

Dominant Wavelength Bin Structure for LUXEON Z Deep Red

Table 19.

Bin Code	Minimum Dominant Wavelength (nm)	Maximum Dominant Wavelength (nm)
6	650	660
7	660	670

Company Information

Philips Lumileds is a leading provider of LEDs for everyday lighting applications. The company's records for light output, efficacy and thermal management are direct results of the ongoing commitment to advancing solid-state lighting technology and enabling lighting solutions that are more environmentally friendly, help reduce CO_2 emissions and reduce the need for power plant expansion. Philips Lumileds LUXEON® LEDs are enabling never before possible applications in outdoor lighting, shop lighting, home lighting, digital imaging, display and automotive lighting.

Philips Lumileds is a fully integrated supplier, producing core LED material in all three base colors, (Red, Green, Blue) and white. Philips Lumileds has R&D centers in San Jose, California and in the Netherlands, and production capabilities in San Jose, Singapore and Penang, Malaysia. Founded in 1999, Philips Lumileds is the high flux LED technology leader and is dedicated to bridging the gap between solid-state technology and the lighting world. More information about the company's LUXEON LED products and solid-state lighting technologies can be found at www.philipslumileds.com.

©2012 Philips Lumileds Lighting Company. All rights reserved.
Product specifications are subject to change without notice.
LUXEON is a registered trademark of the Philips Lumileds Lighting Company in the United States and other countries.

PHILIPS
LUMILEDS

www.philipslumileds.com
www.philipslumileds.cn.com
www.futurelightingsolutions.com

For technical assistance or the location of your nearest sales office contact any of the following:

North America:
1 888 589 3662
americas@futurelightingsolutions.com

Europe:
00 800 443 88 873
europe@futurelightingsolutions.com

Asia Pacific:
800 5864 5337
asia@futurelightingsolutions.com

Japan:
800 5864 5337
japan@futurelightingsolutions.com