LX8415-xx

0.5A Low Dropout Positive Regulators

Preliminary Data Sheet

LINFINITY MICROELECTRONICS

THE INFINITE POWER OF INNOVATION

DESCRIPTION

The LX8415 series ICs are positive Low Dropout (LDO) regulators. At the designed maximum load current, the LX8415 series dropout voltage is guaranteed to be 1.3V or lower at 0.5A. The dropout voltage decreases with load current.

The LX8415 is available in an adjustable output voltage version and fixed output versions of 2.5V and 3.3V. On-chip trimming of the internal voltage reference allows specification of the initial output voltage to within ±1% of its nominal value. The output current-limit point is also trimmed, which helps to minimize stress on both the regulator and the system power source when they are operated under short-circuit conditions. The regulator's internal circuitry will operate at input-to-output differential voltages down to 1V.

Most regulator circuit designs include output capacitors with values in the range of tens to hundreds of microfarads or more. The LX8415 typically requires at least 10µF of output capacitance for stable operation.

The LX8415 is available in the low-profile plastic SOT-223 package for applications where space is at a premium.

NOTE: For current data & package dimensions, visit our web site: **http://www.linfinity.com.**

PRODUCT HIGHLIGHT

Low Cost 5V to 3.3V Regulator

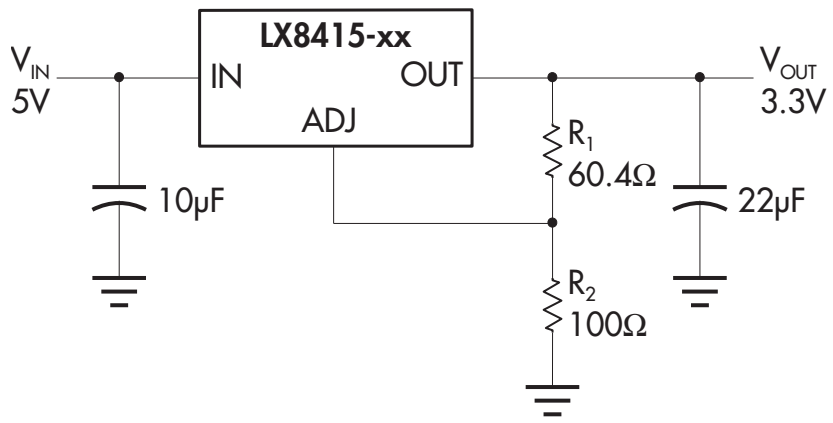

KEY FEATURES

- 0.7% Line Regulation Maximum
- 0.7% Load Regulation Maximum
- Output Current Of 500mA
- Regulates To <1.3V Dropout
- Space Saving SOT-223 Surface Mount Package
- Guaranteed Dropout Voltage At Multiple Current Levels
- 3-Terminal Adjustable, Fixed 2.5V And Fixed 3.3V

APPLICATIONS

- Battery Chargers
- 5V To 3.3V Linear Regulators
- Post Regulators For Switching Supplies
- Modems
- DVD Players

Available Options per Part #

Part #	Output Voltage
LX8415-25	2.5V
LX8415-33	3.3V
LX8415-00	Adjustable

PACKAGE ORDER INFO

T_A (°C)	ST Plastic SOT-223 3-pin
0 to 125	LX8415-xxCST

Note: All surface-mount packages are available in Tape & Reel. Append the letter "T" to part number (i.e. LX8415-33CSTT). "xx" refers to output voltage, please see table above.

Copyright © 1999
Rev. 0.4 1/99

LINFINITY MICROELECTRONICS INC.
11861 Western Avenue, Garden Grove, CA. 92841, 714-898-8121, Fax: 714-893-2570

ABSOLUTE MAXIMUM RATINGS (Note 1)

Power Dissipation ..... Internally Limited
Input Voltage
LX8415-00 (Adjustable) / 8415-33 (3.3V) 7V
Surge Voltage 7V
Operating Junction Temperature
Plastic (ST, DD & DT Packages) ..... 150°C
Storage Temperature Range ..... -65°C to 150°C
Lead Temperature (Soldering, 10 seconds) ..... 300°C
Short-Circuit Protection ..... Indefinite

Note 1. Exceeding these ratings could cause damage to the device. All voltages are with respect to Ground. Currents are positive into, negative out of the specified terminal.

THERMAL DATA

ST PACKAGE:

THERMAL RESISTANCE-JUNCTION TO TAB, θ_{JT}	15°C/W
THERMAL RESISTANCE-JUNCTION TO AMBIENT, θ_{JA}	*150°C/W

Junction Temperature Calculation: $T_J = T_A + (P_D \times \theta_{JA})$. The θ_{JA} numbers are guidelines for the thermal performance of the device/pc-board system. All of the above assume no ambient airflow.

* θ_{JA} can be improved with package soldered to 0.5IN^2 copper area over backside ground plane or internal power plane. θ_{JA} can vary from 20ºC/W to > 40ºC/W depending on mounting technique. (See Application Notes Section: Thermal Considerations)

PACKAGE PIN OUTS

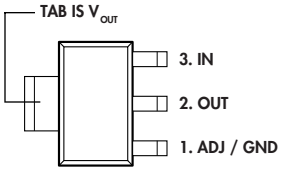

ST PACKAGE
(Top View)

BLOCK DIAGRAM

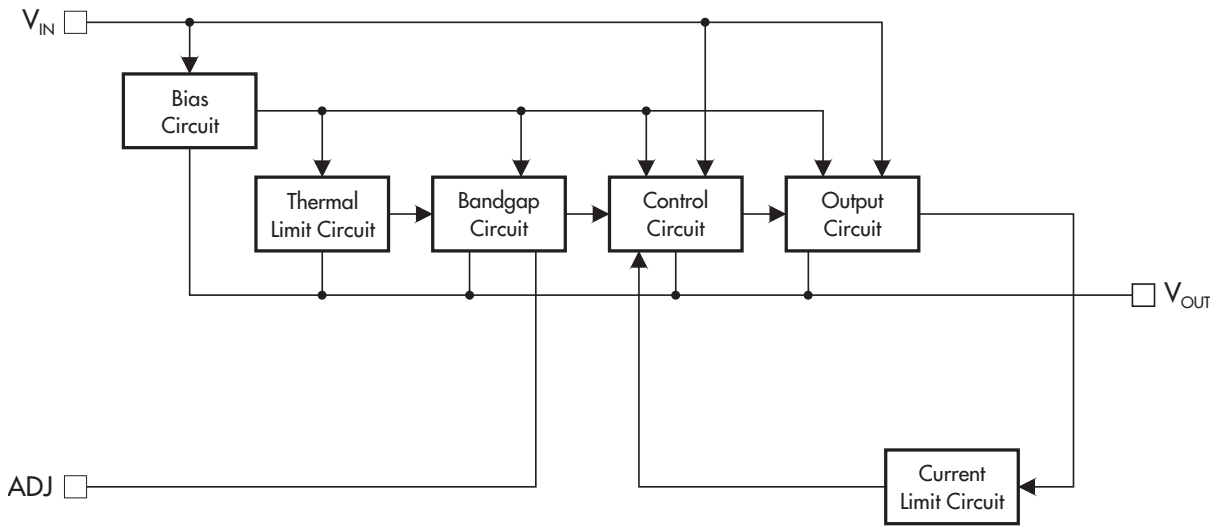

LINFINITY MICROELECTRONICS

Copyright © 1999

RECOMMENDED OPERATING CONDITIONS (Note 2)

Parameter	Symbol	Recommended Operating Conditions			Units
		Min.	Typ.	Max.	
Input Voltage					
Operating Voltage LX8415-xx				7	V
Operating Ambient Temperature Range		0		125	°C

Note 2. Range over which the device is functional.

ELECTRICAL CHARACTERISTICS

(Unless otherwise specified: 0°C ≤ T_J ≤ 125°C, I_{MAX} = 0.5A for the LX8415-xx.)

Parameter		Symbol	Test Conditions	LX8415-xx			Units
				Min.	Typ.	Max.	
Reference Voltage	LX8415-00	V_{REF}	I_{OUT} = 10mA, (V_{IN} - V_{OUT}) = 2V, T_J = 25°C	1.238	1.250	1.262	V
			10mA ≤ I_{OUT} ≤ I_{MAX}, 1.5V ≤ (V_{IN} - V_{OUT}) ≤ 6V	1.225	1.250	1.275	V
Output Voltage	LX8415-25		I_{OUT} = 10mA, V_{IN} = 5V, T_J = 25°C	2.475	2.500	2.525	V
			0mA ≤ I_{OUT} ≤ I_{MAX}, 4.75V ≤ V_{IN} ≤ 6V	2.450	2.500	2.550	V
	LX8415-33		I_{OUT} = 10mA, V_{IN} = 5V, T_J = 25°C	3.267	3.300	3.333	V
			0mA ≤ I_{OUT} ≤ I_{MAX}, 4.75V ≤ V_{IN} ≤ 6V	3.235	3.300	3.365	V
Line Regulation	LX8415-00		I_{OUT} = 10mA, 1.5V ≤ V_{IN} - V_{OUT} ≤ 6V		0.05	0.7	%
(Note 3)	LX8415-25 / 33		I_{OUT} = 0mA, 4.75V ≤ V_{IN} ≤ 6V		1	7	mV
Load Regulation	LX8415-00		(V_{IN} - V_{OUT}) = 3V, 10mA ≤ I_{OUT} ≤ I_{MAX}		0.15	0.5	%
(Note 3)	LX8415-25 / 33		V_{IN} = 4.75V, 0mA ≤ I_{OUT} ≤ I_{MAX}		10	20	mV
Dropout Voltage	LX8415-xx		I_{OUT} = 100mA		1.05	1.20	V
(Note 4)			I_{OUT} = 300mA		1.10	1.25	V
			I_{OUT} = I_{MAX}		1.15	1.30	V
Current Limit	LX8415-xx	$I_{OUT\ (MAX)}$	(V_{IN} - V_{OUT}) ≥ 1.3V, T_J = 25°C	500	950		mA
Minimum Load Current (Note 5)			V_{IN} ≤ 6V, (LX8415-00)		0.5	10	mA
Quiescent Current	LX8415-25 / 33		V_{IN} ≤ 6V		4.5	10	mA
Thermal Regulation			T_A = 25°C, 30ms Pulse		0.08	0.2	%/W
Ripple Rejection			f_{RIPPLE} = 120Hz, (V_{IN} - V_{OUT}) = 3V, V_{RIPPLE} = 1Vp - p	60	75		dB
Adjust Pin Current	LX8415(A)-00				60	130	µA
Adjust Pin Current Change	LX8415(A)-00		10mA ≤ I_{OUT} ≤ I_{MAX}, 1.5V ≤ (V_{IN} - V_{OUT}) ≤ 6V		0.2	5	µA
Temperature Stability					0.5		%
Long Term Stability			T_A = 125°C, 1000Hrs		0.3		%
RMS Output Noise			(% of V_{OUT}), 10Hz ≤ f ≤ 10kHz		0.003		%

Notes: 3. See thermal regulation specification for changes in output voltage due to heating effects. Load regulation and line regulation are measured at a constant junction temperature by low duty cycle pulse testing.

4. Dropout voltage is specified over the full output current range of the device. Dropout voltage is defined as the minimum input/output differential measured at the specified output current. Test points and limits are also shown on the Dropout Voltage Curve.

5. Minimum load current is defined as the minimum output current required to maintain regulation.

Copyright © 1999

APPLICATION NOTES

The LX8415 series ICs are easy to use Low-Dropout (LDO) voltage regulators. They have the standard self-protection features expected of a voltage regulator: short circuit protection and automatic thermal shutdown if the device temperature rises above approximately 165°C.

Use of an output capacitor is REQUIRED with the LX8415 series. Please see the table below for recommended minimum capacitor values.

These regulators offer a more tightly controlled reference voltage tolerance and superior reference stability when measured against the older pin-compatible regulator types that they replace.

STABILITY

The output capacitor is part of the regulator's frequency compensation system. Many types of capacitors are available, with different capacitance value tolerances, capacitance temperature coefficients, and equivalent series impedances. For all operating conditions, connection of a 220µF aluminum electrolytic capacitor or a 47µF solid tantalum capacitor between the output terminal and ground will guarantee stable operation.

If a bypass capacitor is connected between the output voltage adjust (ADJ) pin and ground, ripple rejection will be improved (please see the section entitled "**RIPPLE REJECTION**"). When ADJ pin bypassing is used, the required output capacitor value increases. Output capacitor values of 220µF (aluminum) or 47µF (tantalum) provide for all cases of bypassing the ADJ pin. If an ADJ pin bypass capacitor is not used, smaller output capacitor values are adequate. The table below shows recommended minimum capacitance values for stable operation.

RECOMMENDED CAPACITOR VALUES

INPUT	OUTPUT	ADJ
10µF	15µF Tantalum, 100µF Aluminum	None
10µF	47µF Tantalum, 220µF Aluminum	15µF

In order to ensure good transient response from the power supply system under rapidly changing current load conditions, designers generally use several output capacitors connected in parallel. Such an arrangement serves to minimize the effects of the parasitic resistance (ESR) and inductance (ESL) that are present in all capacitors. Cost-effective solutions that sufficiently limit ESR and ESL effects generally result in total capacitance values in the range of hundreds to thousands of microfarads, which is more than adequate to meet regulator output capacitor specifications. Output capacitance values may be increased without limit.

The circuit shown in Figure 1 can be used to observe the transient response characteristics of the regulator in a power system under changing loads. The effects of different capacitor types and values on transient response parameters, such as overshoot and undershoot, can be quickly compared in order to develop an optimum solution.

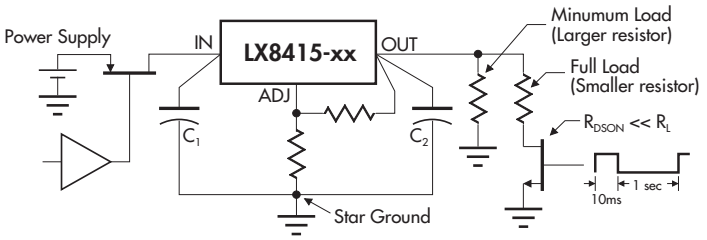

FIGURE 1 — DYNAMIC INPUT and OUTPUT TEST

RIPPLE REJECTION

Ripple rejection can be improved by connecting a capacitor between the ADJ pin and ground. The value of the capacitor should be chosen so that the impedance of the capacitor is equal in magnitude to the resistance of R1 *at the ripple frequency*. The capacitor value can be determined by using this equation:

$$C = 1 / (6.28 * F_R * R1)$$

where: C ≡ the value of the capacitor in Farads; select an equal or larger standard value.
F_R ≡ the ripple frequency in Hz
R1 ≡ the value of resistor R1 in ohms

At a ripple frequency of 120Hz, with R1 = 100Ω:

$$C = 1 / (6.28 * 120Hz * 100\Omega) = 13.3\mu F$$

The closest equal or larger standard value should be used, in this case, 15µF.

When an ADJ pin bypass capacitor is used, output ripple amplitude will be essentially independent of the output voltage. If an ADJ pin bypass capacitor is not used, output ripple will be proportional to the ratio of the output voltage to the reference voltage:

$$M = V_{OUT}/V_{REF}$$

where: M ≡ a multiplier for the ripple seen when the ADJ pin is optimally bypassed.
V_{REF} = 1.25V.

For example, if V_{OUT} = 2.5V the output ripple will be:

$$M = 2.5V/1.25V = 2$$

Output ripple will be twice as bad as it would be if the ADJ pin were to be bypassed to ground with a properly selected capacitor.

LINFINITY MICROELECTRONICS

Copyright © 1999
Rev. 0.4 1/99

APPLICATION NOTES

OUTPUT VOLTAGE

The LX8415 ICs develop a 1.25V reference voltage between the output and the adjust terminal (See Figure 2). By placing a resistor, R1, between these two terminals, a constant current is caused to flow through R1 and down through R2 to set the overall output voltage. Normally this current is the specified minimum load current of 10mA. Because I_{ADJ} is very small and constant when compared with the current through R1, it represents a small error and can usually be ignored.

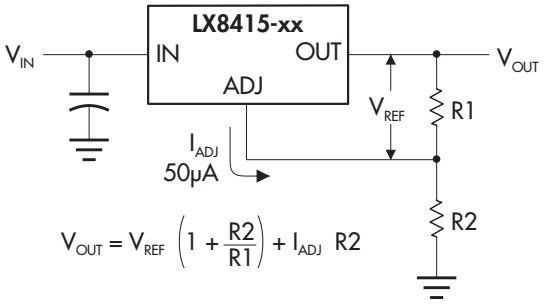

FIGURE 2 — BASIC ADJUSTABLE REGULATOR

LOAD REGULATION

Because the LX8415 regulators are three-terminal devices, it is not possible to provide true remote load sensing. Load regulation will be limited by the resistance of the wire connecting the regulator to the load. The data sheet specification for load regulation is measured at the bottom of the package. Negative side sensing is a true Kelvin connection, with the bottom of the output divider returned to the negative side of the load. Although it may not be immediately obvious, best load regulation is obtained when the top of the resistor divider, (R1), is connected *directly* to the case of the regulator, *not to the load*. This is illustrated in Figure 3. If R1 were connected to the load, the effective resistance between the regulator and the load would be:

$$R_{Peff} = R_P * \left(\frac{R2+R1}{R1}\right)$$

where: $R_P \equiv$ Actual parasitic line resistance.

When the circuit is connected as shown in Figure 3, the parasitic resistance appears as its actual value, rather than the higher R_{Peff}.

Even when the circuit is optimally configured, parasitic resistance can be a significant source of error. A 100 mil (2.54 mm) wide PC trace built from 1 oz. copper-clad circuit board material has a parasitic resistance of about 5 milliohms per inch of its length at room temperature. If a 3-terminal regulator used to supply 2.50 volts is connected by 2 inches of this trace to a load which draws 5 amps of current, a 50 millivolt drop will appear between the regulator and the load. Even when the regulator output voltage is precisely 2.50 volts, the load will only see 2.45 volts, which is a 2% error. It

LOAD REGULATION (continued)

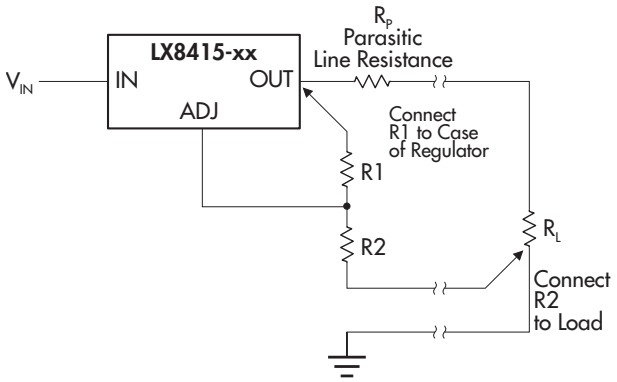

FIGURE 3 — CONNECTIONS FOR BEST LOAD REGULATION

is important to keep the connection between the regulator output pin and the load as short as possible, and to use wide traces or heavy-gauge wire.

The minimum specified output capacitance for the regulator should be located near the reglator package. If several capacitors are used in parallel to construct the power system output capacitance, any capacitors beyond the minimum needed to meet the specified requirements of the regulator should be located near the sections of the load that require rapidly-changing amounts of current. Placing capacitors near the sources of load transients will help ensure that power system transient response is not impaired by the effects of trace impedance.

To maintain good load regulation, wide traces should be used on the input side of the regulator, especially between the input capacitors and the regulator. Input capacitor ESR must be small enough that the voltage at the input pin does not drop below $V_{IN\ (MIN)}$ during transients.

$$V_{IN\ (MIN)} = V_{OUT} + V_{DROPOUT\ (MAX)}$$

where: $V_{IN\ (MIN)}$ ≡ the lowest allowable instantaneous voltage at the input pin.

V_{OUT} ≡ the designed output voltage for the power supply system.

$V_{DROPOUT\ (MAX)}$ ≡ the specified dropout voltage for the installed regulator.

THERMAL CONSIDERATIONS

The LX8415 regulators have internal power and thermal limiting circuitry designed to protect each device under overload conditions. For continuous normal load conditions, however, maximum junction temperature ratings must not be exceeded. It is important to give careful consideration to all sources of thermal resistance from junction to ambient. This includes junction to case, case to heat sink interface, and heat sink thermal resistance itself.

Copyright © 1999

APPLICATION NOTES

THERMAL CONSIDERATIONS (continued)

Example

Given: V_{IN} = 5.0V ±5%, V_{OUT} = 2.5V ±3%
I_{OUT} = 0.5A, T_A = 55°C, T_J = 125°C
$R_{\theta JT}$ = 15°C/W, $R_{\theta TS}$ = 5°C/W

Find: The size of a square area of 1oz. copper circuit-board trace-foil that will serve as a heatsink, adequate to maintain the junction temperature of the LX8415 in the ST (SOT-223) package within specified limits.

Solution: The junction temperature is:
$T_J = P_D (R_{\theta JT} + R_{\theta CS} + R_{\theta SA}) + T_A$

where: P_D ≡ Dissipated power.
$R_{\theta JT}$ ≡ Thermal resistance from the junction to the mounting tab of the package.
$R_{\theta TS}$ ≡ Thermal resistance through the interface between the IC and the surface on which it is mounted.
$R_{\theta SA}$ ≡ Thermal resistance from the mounting surface of the heatsink to ambient.
T_S ≡ Heat sink temperature.



First, find the maximum allowable thermal resistance of the heat sink:

$$P_D = [[V_{IN} * (1 + Tol_{VIN})] - [V_{OUT} * (1 - Tol_{VOUT})]] * I_{OUT}$$

$$P_D = \mathbf{1.4W}$$

$$R_{\theta SA} = \frac{T_J - T_A}{P_D} - (R_{\theta JT} + R_{\theta TS}), \qquad R_{\theta SA} = \mathbf{29.6°C/W}$$

A test was conducted to determine the thermal characteristics of 1 oz. copper circuit-board trace material. The following equation describes the observed relationship between the area of a square copper pad, and the thermal resistance from the tab of a SOT-223 package soldered at the center of the pad to ambient.

$$Area_{SINK} = \frac{3.1°C/W}{R_{\theta SA} - 22.3°C/W} \ in^2$$

Substituting the value for $R_{\theta SA}$ calculated above, we find that a square pad with area:

$Area_{SINK}$ = **0.43 in²** (0.66" x 0.66"), **280mm²** (17 x 17 mm)

will be required to maintain the LX8415 junction temperature within specified limits.

LINFINITY MICROELECTRONICS

Copyright © 1999
Rev. 0.4 1/99

TYPICAL APPLICATIONS

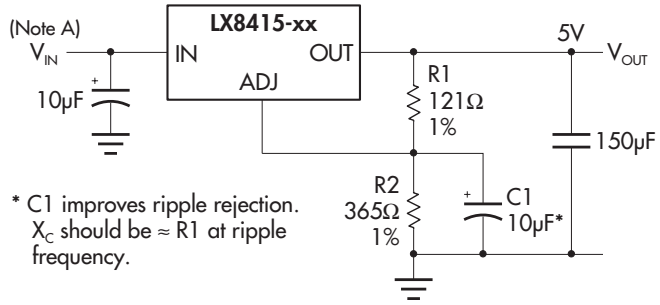

FIGURE 4 — IMPROVING RIPPLE REJECTION

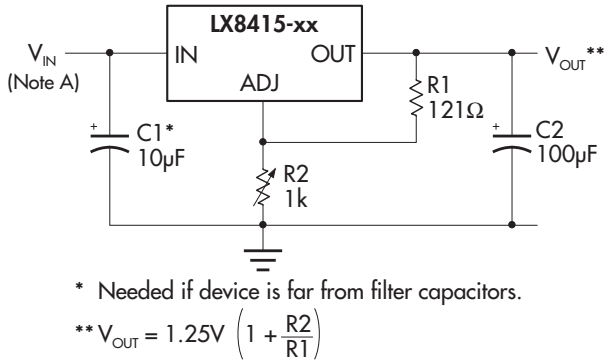

FIGURE 5 — 1.2V - 6V ADJUSTABLE REGULATOR

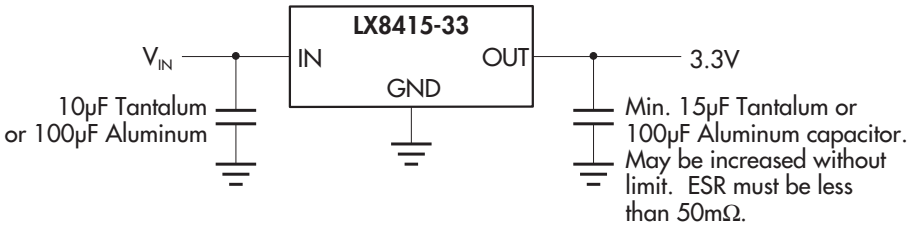

FIGURE 6 — FIXED 3.3V OUTPUT REGULATOR

Note A: $V_{IN\ (MIN)}$ = (Intended V_{OUT}) + ($V_{DROPOUT\ (MAX)}$)

PRELIMINARY DATA - Information contained in this document is pre-production data, and is proprietary to LinFinity. It may not modified in any way without the express written consent of LinFinity. Product referred to herein is offered in sample form only, and Linfinity reserves the right to change or discontinue this proposed product at any time.

Copyright © 1999