PMIC with E-Fuse and Current Monitoring for HDD and SSD

Description

The LX8237 integrated power management IC is the ideal choice for next generation enterprise HDD and SSD power systems. It consists of 5V and 12V eFuse over-voltage protection switches and 3.3V and 0.94V switching regulators.

The 5V and 12V eFuse switches are designed for hot swap and limit inrush current limiting. In addition, they provide fast acting protection of voltage surges, output over current, and crow bar events. Under an input voltage surge condition, the E-Fuse devices clamp the output voltage to protect downstream circuitry and maximize run time. In addition to surge protection, The 5V eFuse switch provides bidirectional voltage blocking to block current in the reverse direction under input voltage crowbar conditions. Both E-Fuses have thermal protection to protect all circuitry in the event of sustained surge or short conditions.

The LX8237 has dual current monitoring outputs to allow monitoring of the input power under all conditions. Both the 5V and 12V inputs are monitored.

Flexible SATA and SAS disable modes are supported and can be tailored to a particular system.

Two high performance constant frequency hysteretic regulators provide ultra-fast regulation, on the fly output voltage setting, and optimal footprint sizes. The 3.5A regulator defaults at 0.94V and switches at 2MHz providing minimal output filter size. The 300mA regulator defaults at 3.3V and switches at 6MHz for ultra-small foot print size. Both outputs can be adjusted with a high speed I2C serial bus. They are fully protected against over current and short circuit conditions.

Features

- 12V eFuse
  - Current Limiting (hot swap inrush, over-load, short-circuit)
  - Output Voltage Clamping and Soft start
  - Output Current Monitoring
  - Thermal Latch Off
- 5V eFuse
  - Current Limiting (hot swap inrush, over-load, short-circuit)
  - Output Voltage Clamping and Soft-start
  - Current Monitoring
  - Reverse Current Protection
  - Thermal Latch Off
- 2MHz, 0.94V (default), 3.5A Switching Regulator
  - Soft-start
  - Hysteretic control
  - Power Save Mode for Light Load Efficiency
  - Constant Frequency Operation at Higher Loads
  - Current Limiting (over-load, short-circuit)
- 6MHz, 3.3V (default), 0.3A Switching Regulator
  - Soft-start
  - Hysteretic Control
  - Power Save Mode for Light Load Efficiency
  - Constant Frequency Operation at Higher Loads
  - Current Limiting (over-load, short-circuit)
  - 100% Duty Cycle Capable
- Voltage Positioning on 3.3V,0.94V
- High-speed (3.4MHz) I²C Serial Bus
- Power Disable Support

Applications

- Enterprise HDD and SSD

© 2015 Microsemi Corporation

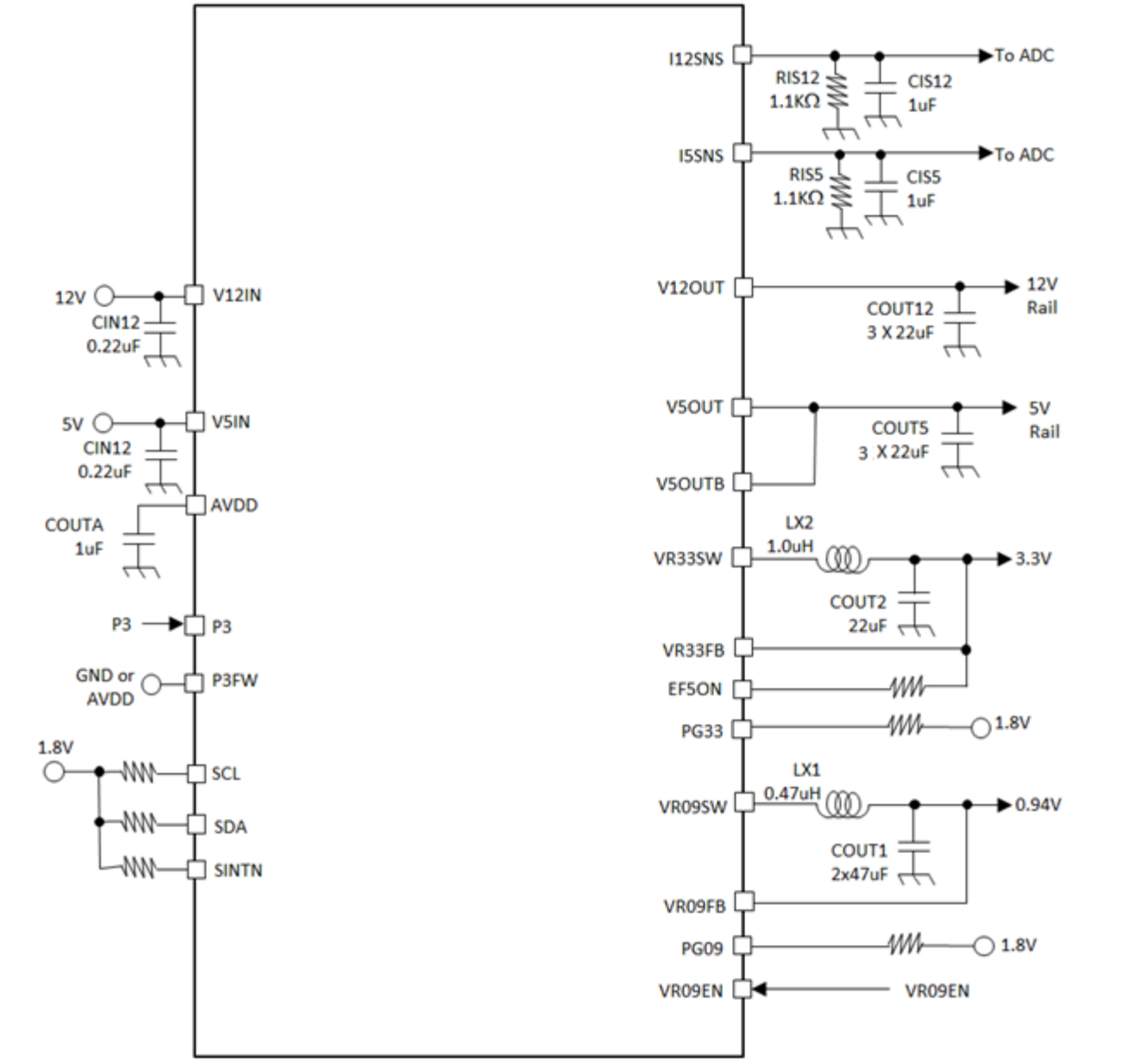

Figure 1 · **Typical Application of LX8237**

Pin Configuration and Pinout

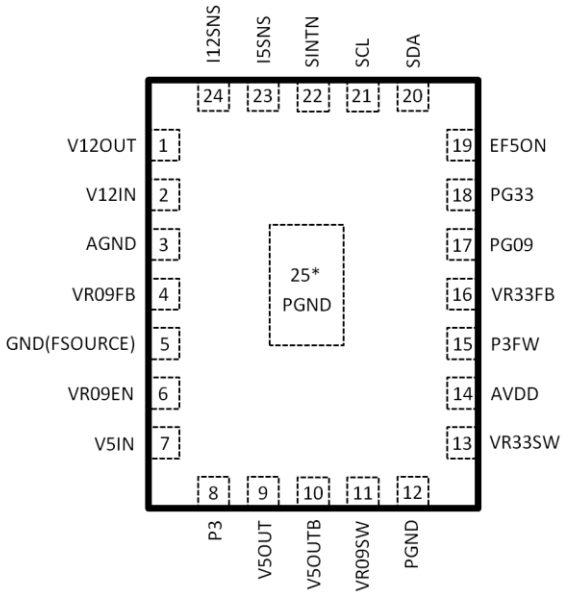

Figure 2 · **Pin out QFN 24L 3.5mm x 4.5mm. (Top View)**

Ordering Information

Ambient Temperature	Type	Package	Part Number	Packaging Type
-40°C to 85°C	RoHS Compliant, Pb-free	QFN 24L 3.5mm x 4.5mm	LX8237ILQ-TR-V2R3	Tape and Reel

Pin Description

Pin Number	Pin Name	Pin Type	Description
1	V12OUT	Power Output	12V eFuse output. Clamped at 15V when V12IN goes beyond 15V. The initial slew rate at this pin is controlled to limit turn-on surge currents.
2	V12IN	Power Input	12V Input.
3	AGND	Power Input	Analog ground. Connect to the board PGND plane at a single point.
4	VR09FB	Analog Input	0.94V output sense input.
5	GND(FSOURCE)	Power Input	Ground. (Internally Reserved for programming eFUSE. 6V power source pin for programming OTP. After programmed, this pin needs to be grounded.)
6	VR09EN	Digital Input	Input used to enable VR09 to start/stop.
7	V5IN	Power Input	5V input.
8	P3	Digital Input	SAS P3 PowerDisable. 3.3V CMOS input. Force high to initiate PowerDisable sequence. Force low to enter active mode.
9	V5OUT	Power Output	Bi-directionally protected 5V output. Clamped at 6V. The initial slew rate at this pin is controlled to limit turn-on surge currents.
10	V5OUTB	Power Input	5V input after eFuse 5V output for VR33, VR09, and control.
11	VR09SW	Power Output	Drives the 0.94V output L-C filter.
12	PGND	Power Input	Power Ground.
13	VR33SW	Power Output	Drives the 3.3V output L-C filter.
14	AVDD	Power Output	Output of the internal pre-regulator. This housekeeping voltage will be used to generate internal bias currents and voltages. It also represents the voltage that is used for internal IC communication. It will be current limited with an on-chip resistor to limit turn-on surge current. This pin is not to be used by external circuitry. A 1µF bypass cap should be placed between AVDD and AGND.
15	P3FW	Digital Input	Allow firmware to control P3 function when P3FW is connected to AVDD
16	VR33FB	Analog Input	3.3V output sense input. Drives an internal resistive feedback divider.
17	PG09	Digital Output	Power Good pin for 0.9V switching regulator. Open drain output which requires an external pull-up resistor. PG09 will go high a certion delay (1µs: deGlitch=1, 200ns: deGlitch=0) after 0.9V outputs is good, it will be low otherwise. Also used as an internal digital test visibility bus output.
18	PG33	Digital Output	Power Good pin for 3.3V switching regulator. Open drain output which requires an external pull-up resistor. PG33 will go high a certain delay (1µs: deGlitch=1, 200ns: deGlitch=0) after 3.3V outputs is good, it will be low otherwise. Also used as an internal analog test visibility bus output.
19	EF5ON	Digital Output	Open drain ouput. External pull up resistor is required. Logic 1 indicates 5V eFuse FET is closed.
20	SDA	Digital In/Out	I²C data port. External pull up resistor is required. 1.8V CMOS logic levels. The power supply for the external pull up resistors is assumed to be at 1.8V, but the sequencing of this supply can occur at any time before, during or after powering of the LX8237 5V or 12V input. If this power supply drops below 1.8V logic level thresholds tolerance value (+/-10%), then I²C communication may be interrupted. The default register value loading of all I²C registers (customer and test) should be independent on the SDA state.

Pin Number	Pin Name	Pin Type	Description
21	SCL	Digital Input	I²C clock port. External pull up resistor is required. 1.8V CMOS logic levels. The power supply for the external pull up resistors is assumed to be at 1.8V, but the sequencing of this supply can occur at any time before, during or after powering of the LX8237 5V or 12V input. If this power supply drops below 1.8V logic level thresholds tolerance value (+/-10%), then I²C communication may be interrupted. The default register value loading of all I²C registers (customer and test) should be independent on the SCL state.
22	SINTN	Digital Output	General purpose interrupt output. External pull up resistor is required. Logic 0 to indicate interrupt.
23	I5SNS	Analog Output	5V eFuse output current monitor. Connect to an external parallel R-C filter network. These component values will be adjusted when the final gain of the current monitor is determined.
24	I12SNS	Analog Output	12V eFuse output current monitor. Connect to an external parallel R-C filter network. These component values will be adjusted when the final gain of the current monitor is determined.
25*	PGND	Power Ground	Power Ground. Connected to back side thermal pad.

Block Diagram

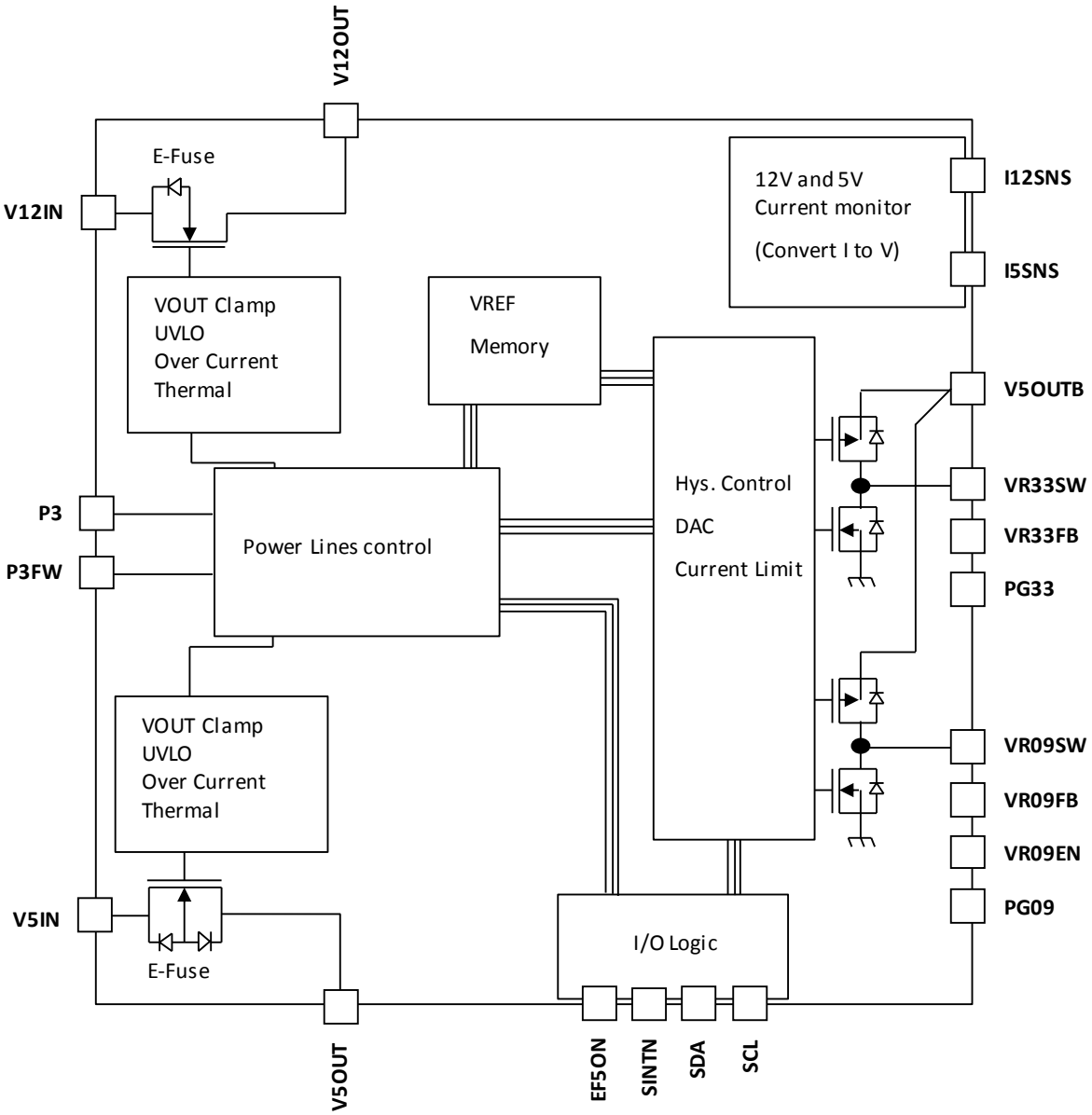

Figure 3 · **Simplified Block Diagram of LX8237**

Absolute Maximum Ratings

Parameter	Min	Max	Units
V12IN	-0.3	25	V
V5IN, V12OUT	-0.3	15	V
V12OUT Current		3.5	A
V5OUT Current		3.5	A
P3, P3FW, V5OUT, SINTN, SDA, SCL, PG09, VR09EN, VR09FB, VR09SW, PG33, VR33FB VR33SW, V5OUTB, I5SNS, I12SNS, AVDD, EF5ON	-0.3	6.5	V
Junction Temperature	-10	150	°C
Storage Temperature	-65	150	°C
Peak Solder Reflow Temperature (40 seconds)		260+0,-5	°C
ESD (Human Body Model)		2000	V
ESD (Charged Device Model)		500	V

Note: Performance is not necessarily guaranteed over this entire range. These are maximum stress ratings only. Exceeding these ratings, even momentarily, can cause immediate damage, or negatively impact long-term operating reliability

Operating Ratings

	Min	Typ	Max	Units
V12IN Voltage	10.8		13.2	V
V12OUT Continous Current			2.5	A
V5IN Voltage	4.3		5.5	V
V5OUT Voltage	2.5		5.5	V
V5OUT Continous Current			2.5	A
Serial I/F Voltage	1.7	1.8	1.95	V
P3 Input Voltage	-0.3	3.3	3.6	V
P3FW Input Voltage	-0.3		1.1*AVDD	V
Junction Temperature	-10		125	°C
Ambient Temperature	-10		85	°C

Note: Performance is generally guaranteed over this range as further detailed below under Electrical Characteristics.

Thermal Properties

Thermal Resistance	Typ	Units
θ_{JA}	40	°C/W

Note: The θ_{JA} numbers assume no forced airflow. Junction Temperature is calculated using $T_J = T_A + (PD \times \theta_{JA})$. In particular, θ_{JA} is a function of the PCB construction. The stated number above is for a four-layer board in accordance with JESD-51 (JEDEC).

Electrical Characteristics

Note: Unless otherwise specified, the following specifications apply over the operating ambient temperature of -40°C ≤ T_A ≤ 85°C. Except where otherwise noted, the following test conditions apply: V12IN=12V, V5IN=5V, LX1=1 µH, COUT1=22µF, LX2=0.47µH, COUT2=44µF, COUT12=3*22µF, COUT5 = 3*22µF. Typical parameters refers to T_A=25°C

Symbol	Parameters	Test Conditions/Comments	Min	Typ	Max	Units
Device						
Ibias1	Biasing current 1	V5IN CURRENT, P3 LOW, VR09EN HIGH, VR33FB=5V @ V12IN=12V, V5IN=5V		0.4	1	mA
Ibias2	Biasing current 2	V5IN CURRENT, P3 LOW, VR09EN LOW, VR33FB=5V @ V12IN=12V, V5IN=5V		0.4	1	mA
Ibias3	Biasing current 3	V5IN CURRENT, P3 HIGH, VR09EN LOW, VR33FB=5V @ V12IN=12V, V5IN=5V		0.4	1	mA
Ibias4	Biasing current 4	V12IN CURRENT, P3 LOW, VR09EN HIGH, VR33FB=5V @ V12IN=12V, V5IN=5V		0.4	1	mA
Ibias5	Biasing current 5	V12IN CURRENT P3 HIGH @ V12IN=12V, V5IN=5V		0.4	1	mA
12V eFuse FET						
I_inrush_12	Inrush Current	Inrush current during the hot-swap condition. Measure the input current into V12IN in the transient of VCC from 0V to 12V at the slewrate of 12V/20ns.			1.5	A
Rdson_12	On Resistance	T_J=25°C, 200mA through V12IN to V12OUT(Note 2)		50		mΩ
		T_J=125°C, 200mA through V12IN to V12OUT(Note 1)			95	
	Off state leakage current				4	µA
Idc_12	Continuous Current	T_A=25°C(Note 1)		2.5		A
Trise_12	Vout ramp time	Measure 10% to 90% rise time at V12OUT Initiate the ramp by setting P3 low.		10		ms
Tdly_12	Turn on delay	Measure delay from the falling edge of P3 to the 10% point at V12OUT.		1.3		ms
Vclamp_12	Output Clamping Voltage	V12IN=18V, dc test, no load. Measure V12OUT.	13.8		14.98	V
	Maximum overshoot in the transient	Increase V12IN from 12V to 24V in 12V/100ns. Monitor the maximum excursion at V12OUT with no load.			15	V
	UVLO falling threshold	Decrease V12IN. Observe when V12OUT with some load falls below V12IN by 100mV.	8.8	9	9.24	V
	UVLO rising hysteresis	Increase V12IN. Observe when V12OUT turns on.	0.6	0.7	0.8	V
Isc_lim_12	Short circuit current limit	V12OUT < 1.5V. Force V12OUT to 0V, measure I(V12OUT).		1	1.5	A

Symbol	Parameters	Test Conditions/Comments	Min	Typ	Max	Units
Iavg_lim_12	Overloading current limit	Force V12OUT to 0.5V less than V12IN,measure I(V12OUT).	3	4	5	A
	Current monitor output current gain	Imon/IeFuse, ImonG=0. Test at 200mA and 300mA.	232.8	240	247.2	uA/A
		Imon/IeFuse, ImonG=1. Test at 200mA and 300mA.	465.6	480	494.4	
	Current monitor error	I(eFuse12) = 200mA, Imon/IeFuse. ImonG=1. Calculate error vs. ideal value.		2	3	%
5V eFuse FET						
I_inrush_5	Inrush Current	Inrush current during the hot-swap condition. Measure the input current into V5IN in the transient of VCC from 0V to 5V at the slewrate of 5V/10ns.			1.5	A
Rdson_5	On Resistance	T_J=25°C, 200mA through V5IN to V5OUT(Note 2)		50		mΩ
		T_J=125°C, 200mA through V5IN to V5OUT(Note 1)			95	
	Off state leakage current				9	µA
Idc_5	Continuous Current	T_A=25°C(Note 1)		2.5		A
Trise_5	Vout ramp time	Measure 10% to 90% rise time at V5OUT Initiate the ramp by setting P3 low.		10		ms
Tdly_5	Turn on delay	Measure delay from the falling edge of P3 to the 10% point at V5OUT.		2.2		ms
Vclamp_5	Output Clamping Voltage	V5IN=10V, dc test, no load. Measure V5OUT.	5.7	6	6.3	V
	Maximum overshoot in the transient	Increase V5IN from 5V to 12V in 70nS (5V/µS). Monitor the maximum excursion at V5OUT with no load.			6.5	V
	UVLO falling threshold	Decrease V5IN. Observe when V5OUT with some load begins to fall.	4.0	4.1	4.2	V
	UVLO rising threshold	Increase V5IN. Observe when V5OUT turns on.	4.25	4.35	4.45	V
Isc_lim_5	Short circuit current limit	V5OUT < 1.5V. Force 0V at V5OUT measure I(V5OUT).		1	1.5	A
Iavg_lim_5	Overloading current limit	Force V5OUT to 0.5V less than V5IN, measure I(V5OUT)	3	4	5	A
	AVDD UVLO rising	This is the point that the 12v E-fuse turns on when 5voutb is rising	2.79		3.2	V
	AVDD UVLO falling	This is the point that the 12V E-fuse turns off when 5OUT5B is lowered	2.17		2.35	V
	V5OUTB UVLO rising	This is where the 3.3V and 0.94 regulators turn off. The SINT pins also in disabled (see the fault condition table)	3.85		4.13	V
	V5OUTB UVLO faling	This is where the 3.3V and 0.94V regulators turn off. The SINT pins also in disabled (see	1.92		3.38	V

Symbol	Parameters	Test Conditions/Comments	Min	Typ	Max	Units
		the fault condition table)				
	Current monitor output current gain	Imon/IeFuse, ImonG=0. Test at 200mA and 300mA.	242.5	250	257.5	µA/A
		Imon/IeFuse, ImonG=1. Test at 200mA and 300mA.	485	500	515	
	Current monitor error	I(eFuse5) = 200mA, Imon/IeFuse		2	3	%
	Reverse current voltage threshold	Force V5OUT above V5IN. Monitor the comparator output. Determine the rising and falling thresholds.		-35		mV
	Reverse current voltage hysteresis	See test above.		15		mV
0.94V Switching Regulator						
	0.94V regulator Input Range	The core blocks of 0.94V Switching Regulator needs to be operational in this condition. The 0.94V regulator will not be enabled until VDD5 has cleared its UVLO threshold and V5OUT has finished rising. (Note 1)	2.5		5.5	V
HSrdson_9	PFET resistance	T_J=25°C, sink -0.5A at VR09SW at V5OUTB=5V(Note 2)		65		mΩ
		T_J=125°C, sink -0.5A at VR09SW at V5OUTB=5V(Note 1)		90		
		T_J=125°C, sink -0.5A at VR09SW at V5OUTB=3V(Note 1)		135		
LSrdson_9	NFET resistance	T_J=25°C, source 0.5A at VR09SW at V5OUTB=5V(Note 2)		18		mΩ
		T_J=125°C, source 0.5A at VR09SW at V5OUTB=5V(Note 1)		30		
		T_J=125°C, source 0.5A at VR09SW at V5OUTB=3V(Note 1)		40		
Idc_9	Continuous DC out current	T_A=25°C		3.5		A
	Peak Current Limit		6.4	7.1	7.8	A
	Overcurrent –Limit Toff Time				605	ns
	DC output voltage	PWM only, no load. Code 000000		770		mV
		PWM only, no load. Code 111111		1085		
	Output voltage accuracy	PWM only, no load. Measure at 0.94V output.		+/-1	+/-1.5	%
	DC output voltage step size	(Note 1)		5		mV
Tsoftstart_9	Soft start time	Measure 10% to 90% rise time at 0.94V output Initiate the ramp by enabling the regulator via VR09EN.		1		ms

Symbol	Parameters	Test Conditions/Comments	Min	Typ	Max	Units
	VR09EN rising threshold	Increase voltage at VR09EN.	0.6		1	V
	VR09EN falling threshold Hysterisis			100		mV
	VR09EN input bias current	Force 1.8V at VR09EN.			1	uA
	PG09 active voltage	Force the FB pin in open loop. Measure when the PG09 pin pulls low.	-17	-10	-8	%
	PG09 deglitch filter	Register DEGLITCH=0		300		ns
		Register DEGLITCH=1		1.2		µs
	PG09 logic 0 active output voltage	I_{SINK}=1mA			400	mV
Tpgdelay_9	PG09 logic 1 in-active output voltage delay			1		ms
	Hiccup time	FBUVLO hiccup time. Force FB to 60%, monitor the SW pin for high and Hi-Z conditions		8.5		ms
	Voltage output transient due to step transient current	I_{LOAD} Slew-rate: 1.6A/1µs from 0.8A to 2.4A			47	mV
	Switching Frequency	PWM only, no load.	1.6	2	2.4	MHz
	Efficiency	3V < V5OUTB < 5.5V, Iload = 0.5A to 2A		90		%
	CCM to DCM Change Point	Sweep the load current. 0A -> 1500mA -> 0A.		600		mA
	DCM to CCM Change Point			1000		
3.3V Switching Regulator						
	3.3V regulator Input Range	(Note 1)	2.5		5.5	V
HSrdson_3	PFET resistance	T_J=25°C, V5OUTB=5V, sink -0.2A at VR33SW(Note 2)		290		mΩ
		T_J=125°C, V5OUTB=5V, sink -0.2A at VR33SW(Note 1)		350		
		T_J=125°C, V5OUTB=3V, sink -0.2A at VR33SW(Note 1)		500		
LSrdson_3	NFET resistance	T_J=25°C, V5OUTB=5V, source 0.2A at VR33SW(Note 2)		440		mΩ
		T_J=125°C, V5OUTB=5V, source 0.2A at VR33SW(Note 1)		640		
		T_J=125°C, V5OUTB=3V, source 0.2A at VR33SW(Note 1)		900		

Symbol	Parameters	Test Conditions/Comments	Min	Typ	Max	Units
Idc_3	Continuous DC current	T_A=25°C(Note 1)		300		mA
	Peak Current Limit		0.75	1.25	1.75	A
	DC output voltage	PWM only, no load. Code 000000		2540		mV
		PWM only, no load. Code 111111		3780		
	Output voltage accuracy	PWM only, no load. Measure at 3.3V output.		+/-1	+/-1.5	%
	DC output voltage step size	(Note 1)		40		mV
	VR33FB voltage range	(Note 1)			V5OUTB	V
	V5OUTB to enable VR33 to start-up	Increase V5OUTB, measure when VR33 starts up.		4		V
Tsoftstart_3	Soft start time	Measure 10% to 90% rise time at 3.3V output Initiate the ramp by forcing V5OUTB to 5V.		1		ms
	PG33 active voltage	Force the FB pin in open loop. Measure when the PG09 pin pulls low.	-14	-10	-8	%
	PG33 deglitch filter	Register DEGLITCH=0		230		ns
		Register DEGLITCH=1		1.4		µs
	PG33 logic 0 active output voltage	Isink=1mA			400	mV
Tpgdelay_3	PG33 logic 1 in-active output voltage delay			1		ms
	Voltage output transient due to step transient current	I_{LOAD} Slew-rate: 1.6A/1µs from 0.15A to 0.35A			165	mV
	Switching Frequency	PWM only.		6		MHz
	Efficiency	3V < V5OUTB < 5.5V, Iload = 0.1A to 0.3A		90		%
	DCM to CCM Change Point	Sweep the load current. 0A -> 300mA -> 0A.		100		mA
	CCM to DCM Change Point			95		
	Cooling Time	FBUVLO hiccup time. Force FB to 60%, monitor the SW pin for high and Hi-Z conditions. Will probably need a pull down resistor at SW.		10		ms
Temperature Monitor						
EOTW	Early over temperature warning		140	155	170	°C

Symbol	Parameters	Test Conditions/Comments	Min	Typ	Max	Units
OTth	Over Temperature Threshold	Sweep temperature. 5V and 12V eFuse have their own thermal shutdown circuit. They should be separately characterized.	160	175	190	°C
OThy	Over temperature hysteresis	EN/FAULT pin is driven by the other eFuse. Thermal Fault, Output Disabled,		50		°C
Tdelta	Temperature difference from EOTW to OTth	Output Enabled	15	20	25	°C
P3 and P3FW						
VP3th	P3 logic rising threshold	V(P3) < VP3th: Power Enable V(P3) > VP3th: Power Disable Use the digital XOR test mode output	1.2	1.6	2.0	V
	P3 logic falling threshold hystresys		200	300	400	mV
	P3 pull-down resistor		60	100	140	kΩ
VP3FWth	P3FW logic rising threshold	V(P3FW) < VP3FWth: P3EN Register Bit Control throughI2C is disabled. V(P3FW) > VP3FWth: P3EN Register Bit Control throughI2C is enabled. Use the digital XOR test mode output.	1.2	1.6	2.0	V
	P3FW logic threshold hystresys		200	300	400	mV
SINTN						
	Output Low Voltage	ISINK(SINTN)=1mA			0.4	V
	Output High Leakage Current	Set SINTN off, force 1.8V at SINTN, measure the leakage current.			2	µA
EF5ON						
	Output Low Voltage	ISINK(EF5ON)=1mA			0.4	V
	Output High Leakage Current	Set EF5ON off, force 1.8V at EF5ON, measure the leakage current.			2	uA
	EF5ON max output voltage	EF5ON is pulled up to VR33FB through a external resistor. (Note 1)			VR33FB	V
	EF5ON logic 0 output voltage	Isink = 1mA	-300		400	mV
	EF5ON max output voltage			3	VR33FB	V
	EF5ON comparator deglitch filter			500		ns
I²C						
I_{Q_OP}	Vol-SDA	I=4mA(Note 1)			0.4	V
V_{MIN}	VDD for I²C interface	Input condition(Note 1)	1.7	1.8	1.95	V
	Vil	Logic0 input voltage(Note 1)	-0.5		0.3*VDD	V

Symbol	Parameters	Test Conditions/Comments	Min	Typ	Max	Units
	Vih	Logic1 input voltage(Note 1)	0.7*VDD		VDD+0.5	V
	Vihyst	Input hysteresis(Note 1)	0.1*VDD			V
	Iin	Input current, Vi=0.1*VDD to 0.9*VDD (Note 1)	-10		10	µA
	Vol	Logic0 output voltage, Isink=2mA(Note 1)	0		0.2*VDD	V
	Iol	Vol=0.4V(Note 1)	3			mA
	Input voltage deglitch	(Note 1)	0		10	ns
	SCL clock frequency	(Note 1)	0		3.4	MHz
	tsu, start/stop	Setup time(Note 1)	160			ns
	thold, start/stop	Hold time(Note 1)	160			ns
	tlow, SCL	low pulse time(Note 1)	160			ns
	thi, SCL	high pulse time(Note 1)	60			ns
	tsu, SDA	data setup time(Note 1)	10			ns
	thold, SDA	data hold time(Note 1)	0		70	ns
	trise, tfall, SCL	clock rise/fall time(Note 1,3,4)	10		1000	ns
	trise, tfall, SDA	data rise/fall time(Note 1,3,4)	10		1000	ns

Note: 1. Guaranteed by Design

Note: 2. Pulse test: Pulse width = 300µs, Duty cycle = 2%.

Note: 3. The signal must be compliant to the characteristic of standard I2C bus. LX8237 is compatible with “Normal/Fast/Fast Plus/High Speed” mode

Note: 4. To achieve the faster rising time, users may need to adjust the pull up resistor value.

Theory of Operation / Application Information

12V eFuse

The 12V eFuse block functions as follows: The 12V eFuse is initially on its off state. The ON/OFF control of the eFuse is base on the input pins V12IN, P3, P3FW, P3En bit and fault conditions. See application details section for the complete control functions. After the eFuse is allowed to turn on, it then ramps the output voltage to its final value while at the same time limit the max current to the current limit value. If the input continues to rise above the OV12 threshold, the eFuse will limit the output to the OV12limit and set the OV12 bit in the serial port. The 12V eFuse will operate in this state until it hits its OT limit and shuts down. The eFuse will restart after temperature is below the OT hystereis value.The 12V eFuse block also has an output current monitor. The current monitor output current is proportional to the current of the 12V eFuse from input to output.

The 12v E-Fuse will limit current to the current limit level. If the output voltage drops low enough, a short is detected and the current limit is reduced even further. If the short circuit is removed before an over temperature event occurs, the current limit level will remain at the short circuit current limit level until all the faults in the I2C registers are cleared by writing to the status register. This will ensure that the output voltage rise rate is limited to the short circuit current level.

5V eFuse

The 5V eFuse block functions as follows: The 5V eFuse is initially on its off state. The ON/OFF control of the eFuse is base on the input pins V5IN, P3, P3FW, P3En bit and fault conditions. See application details section for the complete control functions. After the eFuse is allowed to turn on, it then ramps the output voltage to its final value while at the same time limit the max current to the current limit value. If the input continues to rise above the OV5 threshold, the chip will limit the output to the OV5limit and set the OV5 bit in the serial port. The 5V eFuse will operate in this state until it hits its OT limit and shuts down. The eFuse will restart after temperature is below the OT hystereis value. When the current goes in the reverse direction above the threshold, the eFuse will open and isolate the output from the input. The eFuse will restart with current limit once the reverse current goes to zero AND the input has satisfied the normal startup criteria. The 5V eFuse block has an output current monitor. The current monitor output current is proportional to the current of the 5V eFuse from input to output. The 5V Efuse block has a logic output at EF5on open drain pin to indicate when the eFuse is in its open protective state.

The 5v E-Fuse will limit current to the current limit level. If the output voltage drops low enough, a short is detected and the current limit is reduced even further. If the short circuit is removed before an over temperature event occurs, the current limit level will remain at the short circuit current limit level until the 3.3v Power Good is OK. This will ensure that the output voltage rise rate is limited to the short circuit current level.

eFuse Current Monitor Function

The average current being supplied by each eFuse output can be monitored at I5SNS and I12SNS. A current proportional to the average eFuse output current will be sourced out of the sense pins. This current will be converted to a voltage and filtered by a parallel R-C network connect at I5SNS and I12SNS pins.

By default, the current monitors are disabled. They are enabled via the serial port. Any fault that turns off either the eFuses or the regulators will turn off the current monitor by reseting IMON bits as well. The current monitors have two different gain selections to allow for better resolution at different current ranges.

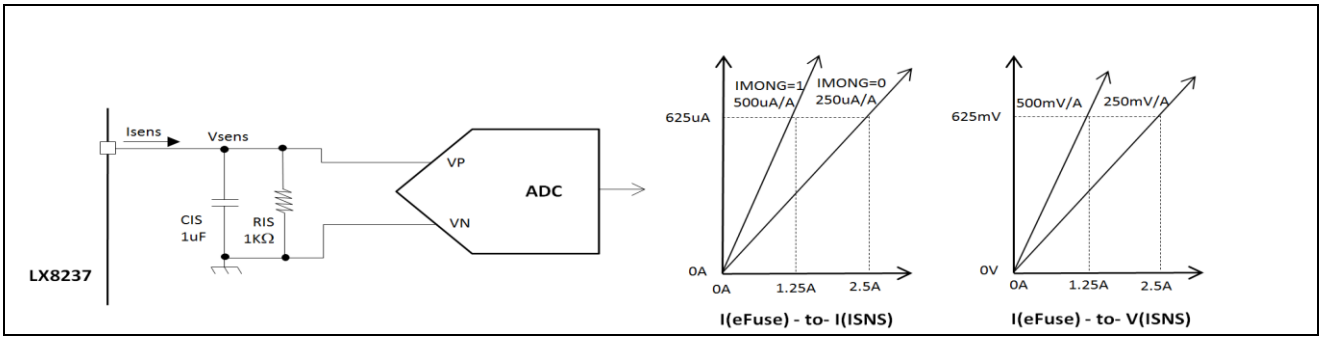

094V Switching Regulator

The VR09 regulator is a fully integrated switching regulator. This regulator features adjustable output voltage with power monitor and over current protection. Whenever the output is 10% below the programmed target output voltage, the PG09 pin is pulled low to indicate a fault. The regulator starts when VR09En goes high and turns off when VR09En goes low. When VR09En is low, the VR09Dis and VR09MonDis bits are automatically reset.

Firmware can disable VR09 when VR09En is high as follows:

1. Set the VR09Key bit to allow the VR09Dis/VR09MonDis bits to be programmed.
2. Set VR09MonDis and VR09Dis as desired. When VR09MonDis is set, the state of the PG09 pin is held steady at the previous value, independent of the actual VR09 output voltage. When VR09Dis is set, VR09 is shut off.
3. VR09Key will automatically reset when any register other than 03H is written. This two step programming approach prevents accidentally disabling VR09 through firmware since the VR09MonDis and VR09Dis bits cannot be changed when VR09Key is reset.
4. Setting VR09Key and then resetting VR09Dis will restart VR09. At the end of the soft start period (rising edge-sensitive), VR09MonDis will automatically reset to re-enable PG09. This allows VR09 to be shut off without disturbing the PG09 pin.

These tables specify the functionality of the VR09Key, VR09Dis, and VR09MonDis bits:

0V9KEY	Function
0	0V9Dis and 0V9MonDis bits cannot be changed via the serial interface. This bit is automatically reset when any register other than 03H is written.
1	0V9Dis and 0V9MonDis bits can be changed via the serial interface.

0V9Dis	Function
0	VR09 is controlled by the VR09En pin.
1	Shut off VR09. This bit is automatically reset whenever VR09En (pin) is set low.

0V9MonDis	Function
0	Allows the PG09 pin to monitor the status of the VR09 output.
1	Hold the PG09 state at whatever value it was at when this bit was set. This bit is automatically reset whenever VR09En (pin) is set low. It is also reset at the end of the soft start ramp up period.

This table shows how the VR09 output is controlled by the 0V9SEL bits. The default setting of 100010 gives an output of 0.94V.

0V9SEL	VR09 (V)	0V9SEL	VR09 (V)	0V9SEL	VR09 (V)	0V9SEL	VR09 (V)
000 000	0.770	010 000	0.850	100 000	0.930	110 000	1.010
000 001	0.775	010 001	0.855	100 001	0.935	110 001	1.015
000 010	0.780	010 010	0.860	100 010	0.940	110 010	1.020
000 011	0.785	010 011	0.865	100 011	0.945	110 011	1.025
000 100	0.790	010 100	0.870	100 100	0.950	110 100	1.030
000 101	0.795	010 101	0.875	100 101	0.955	110 101	1.035
000 110	0.800	010 110	0.880	100 110	0.960	110 110	1.040
000 111	0.805	010 111	0.885	100 111	0.965	110 111	1.045
001 000	0.810	011 000	0.890	101 000	0.970	111 000	1.050
001 001	0.815	011 001	0.895	101 001	0.975	111 001	1.055
001 010	0.820	011 010	0.900	101 010	0.980	111 010	1.060
001 011	0.825	011 011	0.905	101 011	0.985	111 011	1.065
001 100	0.830	011 100	0.910	101 100	0.990	111 100	1.070
001 101	0.835	011 101	0.915	101 101	0.995	111 101	1.075
001 110	0.840	011 110	0.920	101 110	1.000	111 110	1.080
001 111	0.845	011 111	0.925	101 111	1.005	111 111	1.085

3.3V Switching Regulator

The VR33 regulator is a fully integrated switching regulator. This regulator features adjustable output voltage with power monitor and over current protection. Whenever the output is 10% below the programmed target output voltage, the PG is triggered and the VR33FLT bit is set along with the PG33 pin pulled low to indicate a
failure.This regulator starts when 5VoutB is crosses the start regulator threshold. It will stop when 5VoutB is below its min supply for proper operation. The start/stop thresholds are different.

This table shows how the VR33 output is controlled by the 3V3SEL bits. The default setting of 10011 gives an output of 3.3V.

3V3SEL	VR33 (V)	3V3SEL	VR33 (V)	3V3SEL	VR33 (V)	3V3SEL	VR33 (V)
00 000	2.54	01 000	2.86	10 000	3.18	11 000	3.50
00 001	2.58	01 001	2.90	10 001	3.22	11 001	3.54
00 010	2.62	01 010	2.94	10 010	3.26	11 010	3.58
00 011	2.66	01 011	2.98	10 011	3.30	11 011	3.62
00 100	2.70	01 100	3.02	10 100	3.34	11 100	3.66
00 101	2.74	01 101	3.06	10 101	3.38	11 101	3.70
00 110	2.78	01 110	3.10	10 110	3.42	11 110	3.74
00 111	2.82	01 111	3.14	10 111	3.46	11 111	3.78

I²C Serial Interface

The chips sports a high speed (3.4MHz) serial interface with the I²C serial protocol. This interface is bi-directional allowing the microprocessor to set functions and read status. Status0/1 register bits are latched once the first fault happens. In this case, the following fault cannot write the register anymore. Cleared by write action to the status register.

I2C Slave Address:

The Slave Address for the LX8237 is 01101110 or 6EH.

Serial Bus Register Map

Address										
Dec	Hex		Bit 7	Bit 6	Bit 5	Bit 4	Bit 3	Bit 2	Bit 1	Bit 0
		ID1	DEV[1]	DEV[0]	MID[2]	MID[1]	MID[0]	NID[2]	NID[1]	NID[0]
0	00H	Read-Only	0	1	0	1	0	0	1	1
		ID2	VID[3]	VID[2]	VID[1]	VID[0]	FAB[1]	FAB[0]	SID[1]	SID[0]
1	01H	Read-Only	0	0	0	0	0	0	0	0
		0V9VSEL	N/A	N/A	0V9SEL[5]	0V9SEL[4]	0V9SEL[3]	0V9SEL[2]	0V9SEL[1]	0V9SEL[0]
2	02H	Read/Write	0	0	1	0	0	0	1	0
		3V3VSEL	N/A	N/A	0V9KEY	3V3SEL[4]	3V3SEL[3]	3V3SEL[2]	3V3SEL[1]	3V3SEL[0]
3	03H	Read/Write	0	0	0	1	0	0	1	1
		CONTROL0	P3EN	IMONG	VR33PWM	VR09PWM	DEGLITCH	IMONEN	0V9MONDIS	0V9DIS
4	04H	Read/Write	0	0	0	0	0	0	0	0
		STATUS0	UV12	UV5	UV33	UV09	OT12	OT5	EOTW12	EOTW5
5	05H	Read/Write	0	0	0	0	0	0	0	0
		STATUS1	OC12	OC5	OC33	OC09	P3STATE	N/A	OV12	OV5
6	06H	Read/Write	0	0	0	0	0	0	0	0

ID1 and ID2:

DEV = Device [01]
MID= major ID [010]: Mask revisions (includes pizza versions)
NID= minor ID [000]
VID= Device [0000]: device pizza version. (ver 1 = 0000, ver 2 = 0001, ver 3 = 0010, etc)
FAB= Fab [00] :
SID= VendorID [00]

Device	ID1	ID2
LX8237ILQ-TR-V2R3	x53 [0101 0011]	X00 [0000 0000]

0V9Sel= VR09 output voltage select
3V3Sel= VR33 output voltage select
VR33PWM= Force VR33 to operate in PWM mode only
VR09PWM= ForceVR09 to operate in PWM mode only
DEGLITCH= deglitch time selection for Fault/POR detection.
IMONEN= eFuse current monitor Enable.
IMONG= Current Monitor Gain
0V9MONDIS= VR09 regulator monitoring Disable (OFF).
0V9DIS= VR09 regulator Disable (OFF).
P3EN= P3 PowerDisable feature enable.
UV12 = 12V input voltage under voltage
UV5= 5V input voltage under voltage
UV33= VR33 output voltage under voltage.
UV09= VR09 output voltage under voltage.
OT12= eFuse12 over temperature

OT5= eFuse5 over temperature
EOTW12= eFuse12 early temperature warning
EOTW5= eFuse5 early temperature warning
OC12 = eFuse12 over current
OC5 = 3Fuse5 over current
OC33 = VR33 output over current
OC09 = VR09 output over current
P3State = P3 pin state
OV12 = eFuse12 input over voltage
OV5= eFuse5 input over voltage
0V9KEY= key to enable 0.94V moniotor & regulator disable.

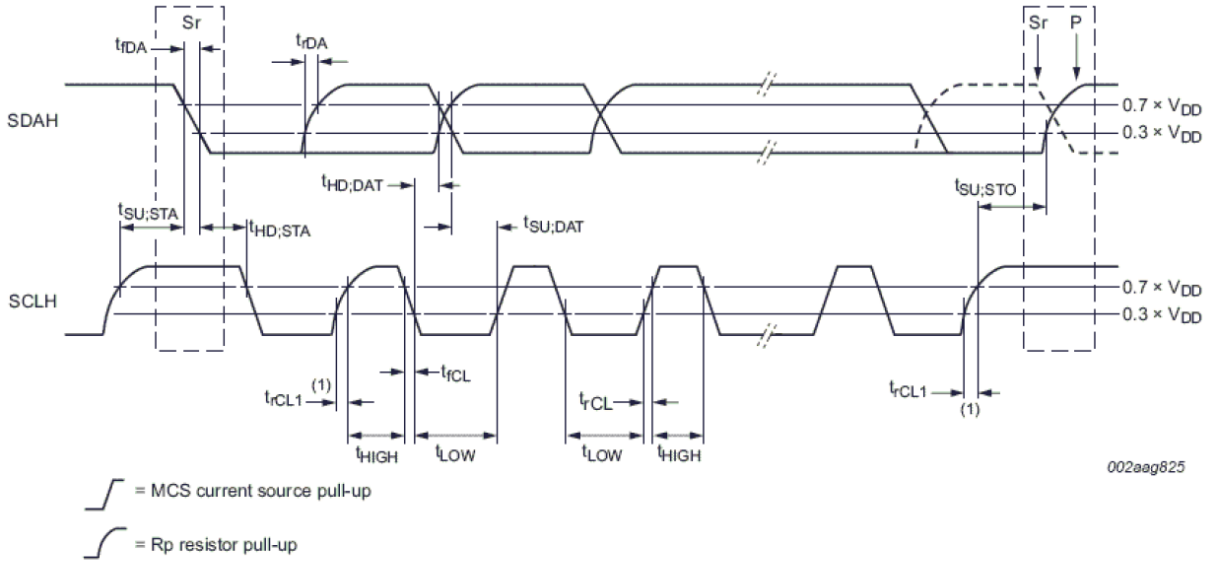

(1) First rising edge of the SCLH signal after Sr and after each acknowledge bit.

Power On and Off Sequence

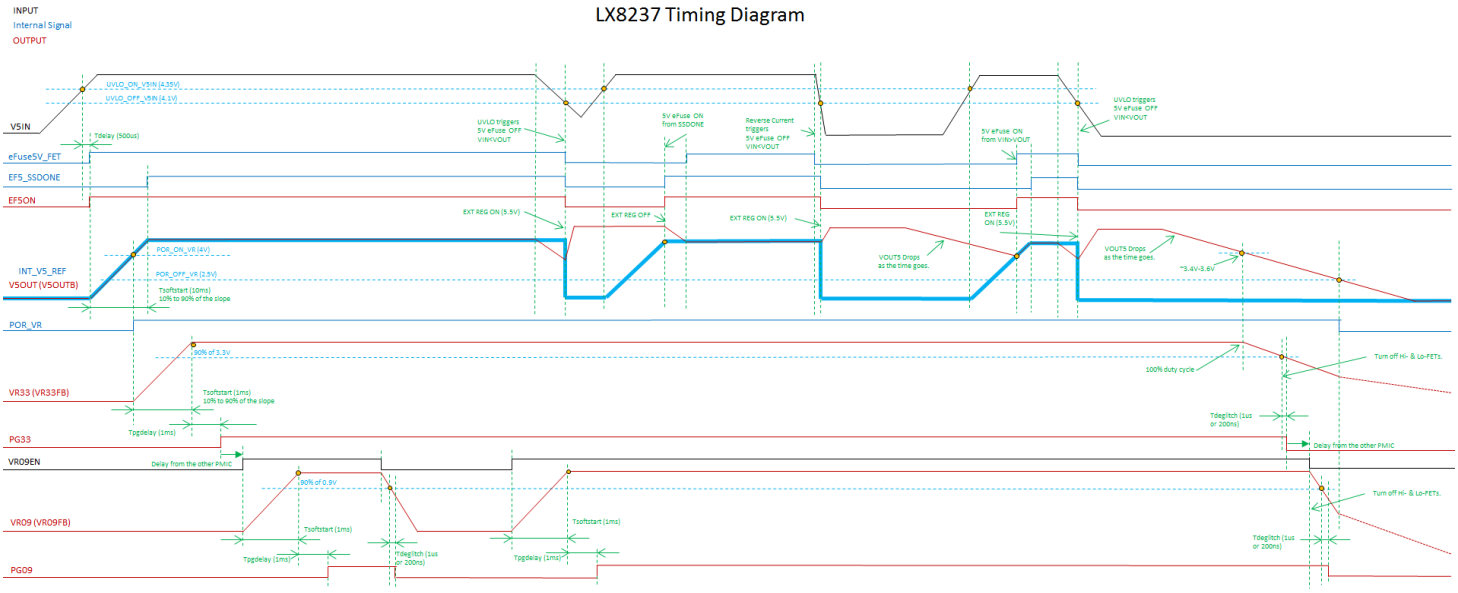

The Yosemite chip is powered from either the VCC5 input or Vout5 depending on its mode of operation. On startup, eFuse12 will wait for VCC5 to come up before it can close. As long as VCC5 input is present, eFuse12 will close and open with VCC12 input above or below its EF12 close/open threshold. If VCC5in input fails, eFuse12 will open in addition to eFuse5 being open from loss of 5V input.
However, eFuse5 can start up only with VCC5 input present.
The Power on sequence for the system is as follows:

1. VCC5 power up and goes above the required operating voltage for the system.
2. The eFuse5 starts ramping its output.
3. Upon 5Vout crossing the regulator minimum operating voltage for turn ON, the VR33 starts up.
4. After VR33 output crosses PG detection threshold, VR33PG signal goes to logic1 1ms after the last time that VR33 is above its target have stabilized.
5. VR09 starts up after VR09EN pin is at logic1 state
6. VR09 output crosses VR09PGth and outputs V09PG signal to logic1 1ms after the last time VR09 output is above its target.
7. Efuse12 starts to ramp AFTER both VCC5 AND VCC12 are good. If either input fails, its respective EF5/EF12 is open.

Reverse Current Control of 5V eFuse

The simplest protection against to the reverse current is a diode in series connection to the load. However, the power loss is significant at the forward current mode. At the worst, the supply rail of the load is not regulated. In order to solve this problem, the body gating technique is implemented for LX8233. The basic concept on this method is to detect the polarity of voltage drop through the pass N-type FET. Once the negative voltage drop is detected, an active switch connects the body of the pass FET from the source to drain. It generates the opposite polarity of body diode to block the reverse current.

Microsemi's approach to protect the discharging from the output capacitor is to utilize the combination of two methods. One method is to detect the voltage drop over the Rdson of an eFuse FET. The othere is to use the accurate input UVLO circuit.

The Rdson sensing is responsible for the high dv/dt input drop like crawbar response (max -5V/µs). 33mV threshold is assigned to detect the reverse voltage from VCC to VOUT through 50mΩ. It represents 660mA reverse current to discharge the output capacitor through eFuse. Any reverse current higher than 660mA by the high dv/dt will be shut off by Rdson sensing circuit.

The slow dv/dt input won't be detected by Rdson sensing circuit since the reverse current is lower than 660mA. The input with slow dv/dt will rely on UVLO detection. Once V5IN goes lower than the UVLO threshold, UVLO circuit will open an eFuse. It requires the accurate threshold(<5%) and fast response time(<2µs).

Power Monitor Functions

The power monitor function has separate functions for each block.

The VR33/VR09 monitor monitors the 3v3/0v9 regulator ouputs respectively and drives PG pin low when either output is 10% below the targeted voltage setting. Upon activation when the input is below the threshold, the power monitor will drive the PG pin to logic0 immediately. Upon deactivation when either of the monitored outputs is above their respective PG thresholds, a 1ms one-shot delay timer is triggered and upon timer timeout, PG is allowed to go to logic1 state..

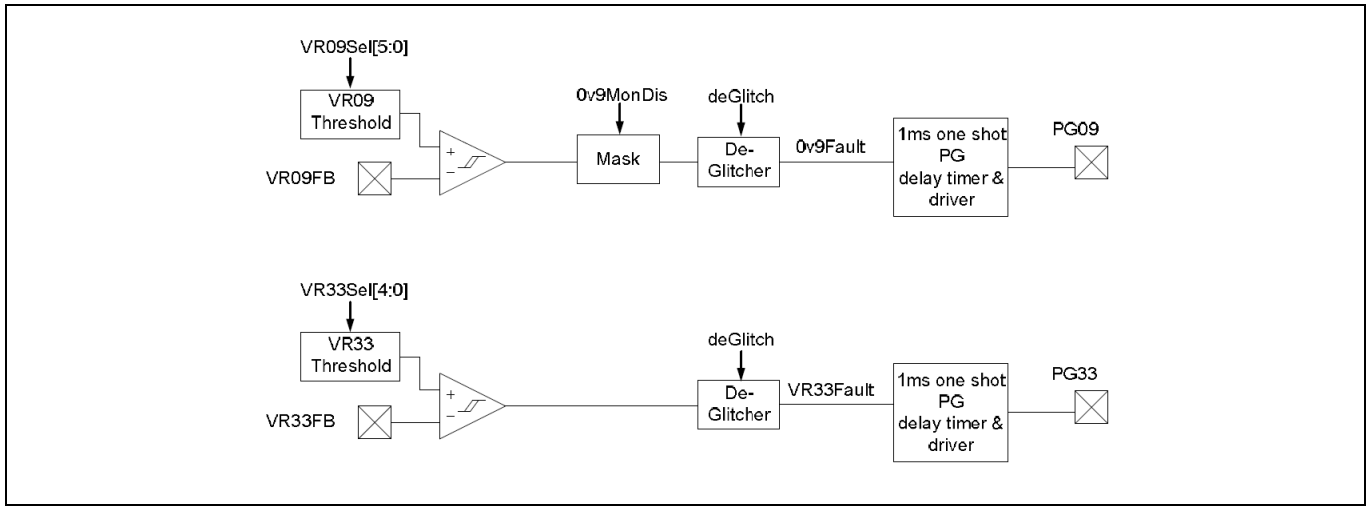

SINTn Control

The SINTn pin will set to logic0 whenever any on the fault is set in the fault registers. This include the change of state for the P3 pin. Whenever a fault status bit is set, the SINTn output is logic0 until all the faults are cleared by FW by writing to the status register.

Temperature Monitoring

The chip has on die temperature sensor for thermal protection as well as system warning of impending over temperature. Upon hitting the EOTW threshold, the chip will set the EOTW bit and pull the SINTn pin low to alert the processor. If the temperature continues to rise above the OT threshold, the chip will shut the block that causes the OT off to allow for cool down. Other blocks will remain in its previous state.

Thermal Protection

If the 12V efuse hits 175degC, that efuse will be latched off. It will remain latched off until (V12IN is cycled high to low and back) OR (P3 is cycled low to high and back) OR (V5IN is cycled high to low and back) OR (AVDD somehow cycles high to low and back).

If the 5V efuse hits 175°C, that efuse as well as the 0.9V switching regulator and the 3.3V switching regulator will be latched off. They will remain latched off until (V5IN is cycled high to low and back) OR (P3 is cycled low to high and back) OR (AVDD somehow cycles high to low and back).

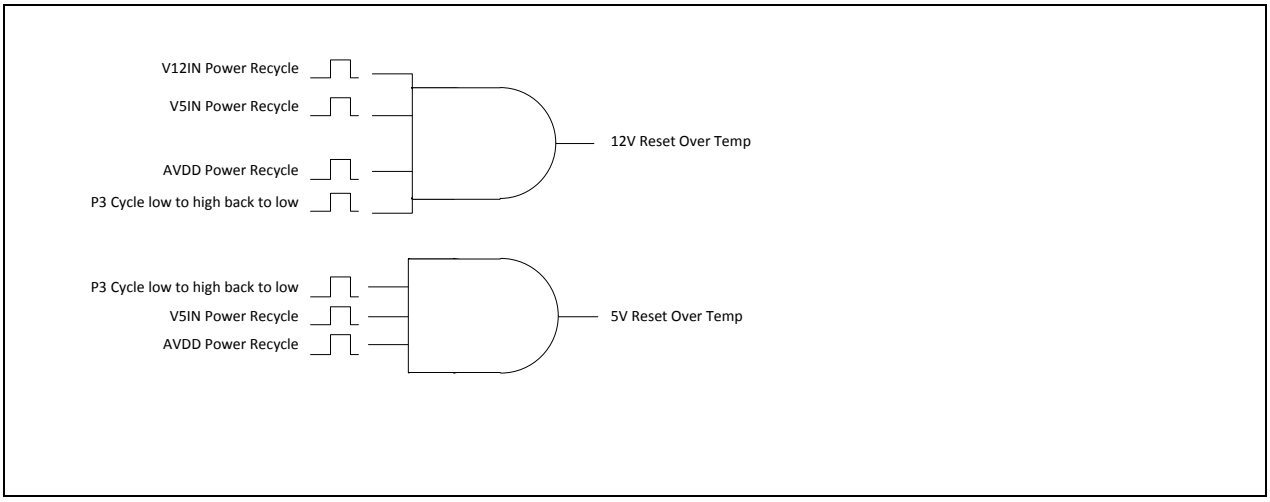

EF5ON Control

V5OUTB is regulated by an external linear regulator (PMOS pass transistor) when the system in the backup mode. The external regulator shouldn't try to regulate V5OUTB when 5V eFuse is on. For such case, the switch regulator to the V5IN will directly connected to the external linear regulator for V5OUTB. EF5ON signal is used to turn on/off the external linear regulator.

The external regulator won't be turned on unless VR33 soft start done signal is high. Also it shouldn't be turned on in the case 12VOUT is already settled but 5VIN comes later.

EF5ON has 1ms deglitch one shot delay filter to prevent fast transient from toggling the EF5ON.

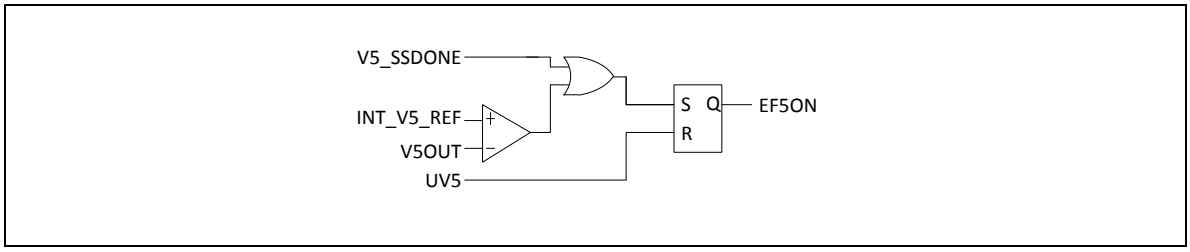

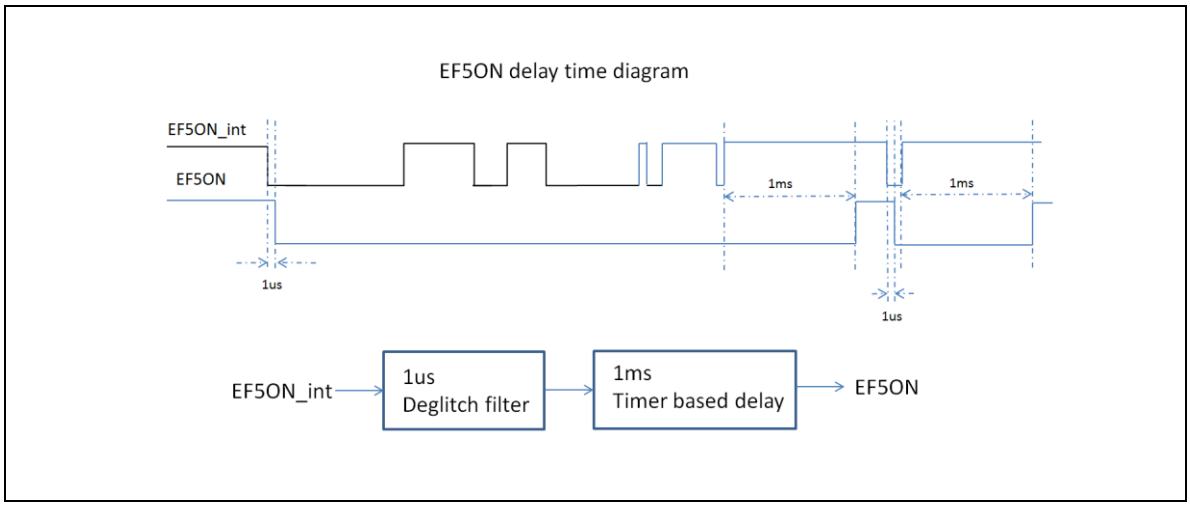

P3 PowerDisable Control

The PowerDisable feature is HW configurable to be allow FW control or not depending on the state of the P3FW pin. of state for the P3 pin. Whenever a fault status bit is set, the SINTn output is logic0 until all the faults are cleared by FW by writing to the status register. When P3FW bit is at logic1 state, FW can enable P3 to control the eFuses.

P3FW	P3EN	P3	12V 5V eFuses
0	0	0	Close
0	0	1	Open
0	1	0	Close
0	1	1	Open
1	0	0	Close
1	0	1	close
1	1	0	close
1	1	1	Open

© 2014 Microsemi Corporation

Fault Condition Management

Signals (which are latched)	Condition / Comment	PG09	PG33	SINTn pin	5V eFuse	12V eFuse	0.94V SR	3.3V SR	Status Bit Set
V12IN under voltage	This fault asserts when the falling V12IN crosses the falling threshold of UVLO of V12IN.	H	H	H => L	Closed	Open	Enable	Enable	UV12
V5IN under voltage	This fault asserts when the falling V5IN crosses the falling threshold of UVLO of V5IN.	H	H	H => L	Open	Closed	Enable	Enable	UV5
V12IN over voltage	This fault asserts when V12OUT clamping occurs.	H	H	H => L	Closed	Closed (V12OUT Clamp)	Enable	Enable	OV12
V5IN over voltage	This fault asserts when V5OUT clamping occurs.	H	H	H => L	Closed (V5OUT Clamp)	Closed	Enable	Enable	OV5
V12OUT Over Current (delay filter ~1.024ms)	This fault asserts when current limit occurs at 12V eFuse FET.	H	H	H => L	Closed	Enable (I12OUT Limit)	Enable	Enable	OC12
V5OUT Over Current (delay filter ~1.024ms)	This fault asserts when current limit occurs at 5V eFuse FET.	H	H	H => L	Enable (I5OUT Limit)	Closed	Enable	Enable	OC5
0.9V Reg under voltage	This fault asserts when V09OUT is lower than 90% of the target voltage.	H => L	H	H => L	Closed	Closed	Enable (Recovery)	Enable	UV09
3.3V Reg under voltage	This fault asserts when V33OUT is lower than 90% of the target voltage.	H	H =>L	H => L	Closed	Closed	Enable	Enable (Recovery)	UV33
0.9V Reg Output Short	This fault VR09OUT is lower than 70% and current limit occurs.	H => L	H	H => L	Closed	Closed	Enable (Hiccup)	Enable	UV09
3.3V Reg Output Short	This fault VR33OUT is lower than 70% and current limit occurs.	H	H => L	H => L	Closed	Closed	Enable	Enable (Hiccup)	UV33
0.9V Reg Over current (delay ~32us)	This fault asserts when the measure current peak hits the current limit. This fault pulls SINTn low but allow the other fault condition to write the fault register instead of locking up the register not to allow since this fault often occurs at the transient.	H	H	H => L	Closed	Closed	Enable (Iout Limit)	Enable	0V90C
3.3V Reg Over current (delay ~32µs)	This fault asserts when the measure current peak hits the current limit. This fault pulls SINTn low but allow the other fault condition to write the fault register instead of locking up the register not to allow since this fault often occurs at the transient	H	H	H => L	Closed	Closed	Enable	Enable (Iout Limit)	3V3OC
5V Early Over Temperature Warning (delay ~32µs)	This fault asserts when 5V eFuse temperature cross the EOTW threshold.	H	H	H => L	Closed	Closed	Enable	Enable	EOTW 5
12V Early Over Temperature Warning (delay ~32µs)	This fault asserts when 12V eFuse temperature cross the EOTW threshold.	H	H	H => L	Closed	Closed	Enable	Enable	EOTW 12
5V Over Temperature	This fault asserts when temperature cross the OT threshold.	H	H	H => L	Open	Closed	Enable	Enable	OT5

12V Over Temperature	This fault asserts when temperature cross the OT threshold	H	H	H => L	Closed	Open	Enable	Enable	OT12
V5OUTB Under Voltage		-	-	H => L	Open	Open	Disable	Disable	-
VR09EN input voltage low		-	-	H	Closed	Closed	Disable	Enable	-
P3 Pin Logic 1 (feature enabled)		-	-	H => L	Open	Open	-	-	P3STATE

I²C SCL and SDA pin requirements

Ideal Specification:

The power supply for the external pull up resistors attached to the SCL and SDA pins is assumed to be at 1.8 us, but the sequencing relative to the internal digital block power supply can occur at any time before or during startup or power down or any time in between. If the power supply drops below 1.8v logic level thresholds tolerance value (-10%), then I²C communication can be interrupted. The default register value loading of all I²C registers (customer and test) should be independent on the SCL/SDA state since this is not known.

Package Marking Description

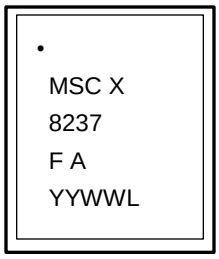

Device Marking	Description
•	Pin 1 Indicator
MSC	Microsemi Corporation
X	For production parts, X=”N” . All other values of X represent pre-production parts.
8237	Supplier Part Number
F	Wafer Fab Location
A	Assembly Location
YY	Year
WW	Work Week
L	Lot Trace Code

Package Outline Dimensions

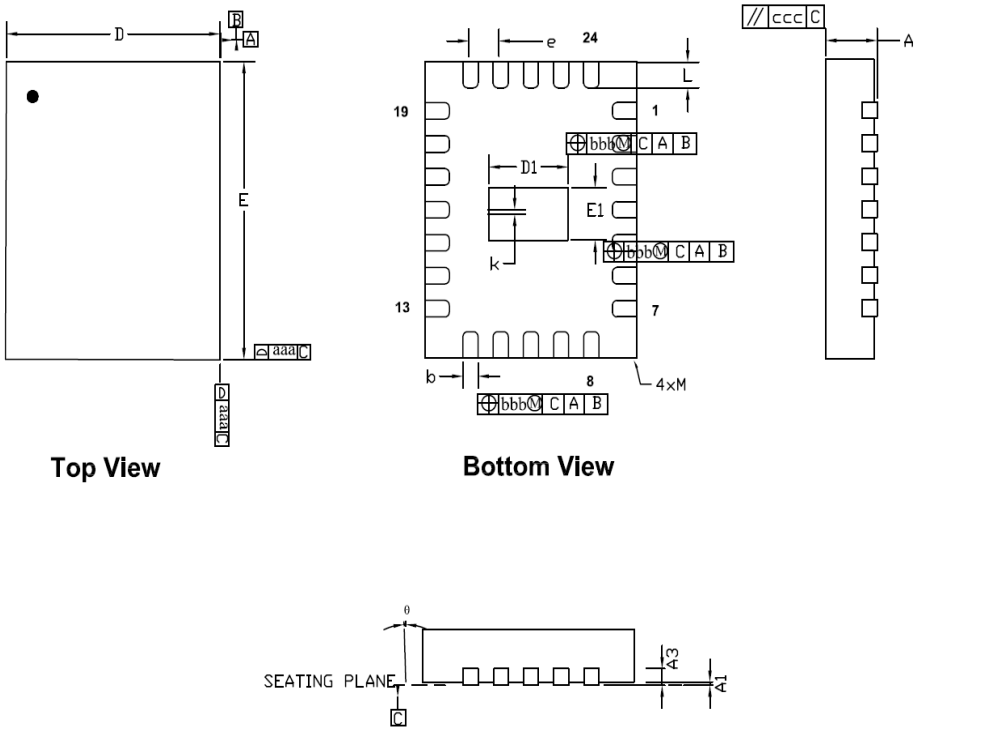

SYMBOLS	DIMENSIONS IN MILLIMETERS		
	MIN	NOM	MAX
A	0.80	0.90	1.00
A1	0	0.02	0.05
A3	——	0.203REF.	——
b	0.18	0.25	0.30
D	3.35	3.50	3.65
D1	1.25	1.30	1.35
E	4.35	4.50	4.65
E1	0.75	0.80	0.85
k	——	0.065BSC	——
e	——	0.50BSC	——
L	0.30	0.40	0.50
θ	0	——	12
aaa	——	0.25	——
bbb	——	0.10	——
ccc	——	0.10	——
M	——	——	0.05

Figure 4 · **24-Pin QFN Package Dimensions**

Land Pattern Recommendation

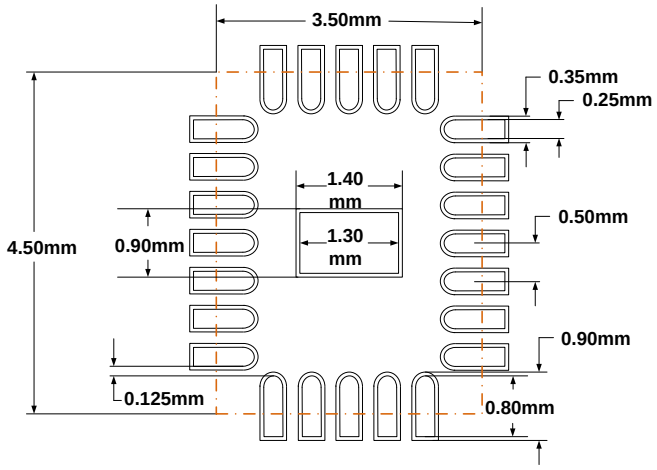

Figure 5 · **24-Pin QFN Package Land Pattern**

Disclaimer:
This PCB land pattern recommendation is based on information available to Microsemi by its suppliers. The actual land pattern to be used could be different depending on the materials and processes used in the PCB assembly, end user must account for this in their final layout. Microsemi makes no warranty or representation of performance based on this recommended land patter



Microsemi Corporate Headquarters
One Enterprise, Aliso Viejo,
CA 92656 USA

Within the USA: +1 (800) 713-4113
Outside the USA: +1 (949) 380-6100
Sales: +1 (949) 380-6136
Fax: +1 (949) 215-4996

E-mail: sales.support@microsemi.com

© 2015 Microsemi Corporation. All rights reserved. Microsemi and the Microsemi logo are trademarks of Microsemi Corporation. All other trademarks and service marks are the property of their respective owners.

Microsemi Corporation (Nasdaq: MSCC) offers a comprehensive portfolio of semiconductor and system solutions for communications, defense & security, aerospace and industrial markets. Products include high-performance and radiation-hardened analog mixed-signal integrated circuits, FPGAs, SoCs and ASICs; power management products; timing and synchronization devices and precise time solutions, setting the world's standard for time; voice processing devices; RF solutions; discrete components; security technologies and scalable anti-tamper products; Power-over-Ethernet ICs and midspans; as well as custom design capabilities and services. Microsemi is headquartered in Aliso Viejo, Calif., and has approximately 3,400 employees globally. Learn more at **www.microsemi.com**.

Microsemi makes no warranty, representation, or guarantee regarding the information contained herein or the suitability of its products and services for any particular purpose, nor does Microsemi assume any liability whatsoever arising out of the application or use of any product or circuit. The products sold hereunder and any other products sold by Microsemi have been subject to limited testing and should not be used in conjunction with mission-critical equipment or applications. Any performance specifications are believed to be reliable but are not verified, and Buyer must conduct and complete all performance and other testing of the products, alone and together with, or installed in, any end-products. Buyer shall not rely on any data and performance specifications or parameters provided by Microsemi. It is the Buyer's responsibility to independently determine suitability of any products and to test and verify the same. The information provided by Microsemi hereunder is provided "as is, where is" and with all faults, and the entire risk associated with such information is entirely with the Buyer. Microsemi does not grant, explicitly or implicitly, to any party any patent rights, licenses, or any other IP rights, whether with regard to such information itself or anything described by such information. Information provided in this document is proprietary to Microsemi, and Microsemi reserves the right to make any changes to the information in this document or to any products and services at any time without notice.