LX1693

High Performance CCFL Controller w/ALS

PRODUCTION DATA SHEET

DESCRIPTION

The LX1693 is a high performance CCFL controller optimized for wide input voltage range notebook display back lighting applications.

Its new brightness control architecture provides versatile support for ambient light sensor (ALS) control of panel brightness. It also supports Intel's DPST (Display Power Saving Technology) that adjusts the brightness as a function of video content. The ALS control architecture is compatible with all Microsemi visible light sensor products.

The controller's digital dimming mode includes three brightness inputs: ALS_IN for the light sensor, BRITE_D for brightness and BST_SYNC for digital dimming and synchronization..

Burst frequency can be controlled either by the on chip burst oscillator or directly by an external logic signal at BST_SYNC. The on chip burst oscillator can either free run or synchronize to an external signal. Digital Dimming duty cycle is controlled by providing either a DC voltage or a PWM signal to the BRITE_D pin. The LX1693 can be operated directly from the battery without the need of an external 5V supply from the system.

The LX1693 power stage includes direct coupled full bridge high voltage drivers for the external N-channel high side and N-channel low side power FETs.

The LX1693 includes lamp current and open lamp voltage regulation, fully programmable lamp frequency and burst dimming frequency oscillators, and our patented fool-proof lamp strike circuitry.

Analog programmable open lamp strike time-out, over voltage, and short circuit fault detection are fully implemented.

The LX1693 is available in the 28 pin 4 x 5 MLPQ surface mount package.

IMPORTANT: For the most current data, consult *MICROSEMI*'s website: **http://www.microsemi.com**

Protected by U.S. Patents: 5,615,093; 5,923,129; 5,930,121; 6,198,234; 7,112,929; Patents Pending

KEY FEATURES

- 7 to 25 Volts Wide Input Voltage Range
- Versatile Support for Ambient Light Sensor Brightness Control
- Resistor Programmable Lamp Operating Frequency within ±4% Tolerance
- Resistor Programmable Burst Operating Frequency
- Support Intel™ DPST for System PWM input
- Compatible with Microsemi's new SMBus CCFL controllers
- Fully Programmable Open Lamp and Load Fault Time Outs
- On Chip Full Wave Rectifiers for Lamp Voltage and Current
- Cost Effective and Low Parts Count Inverter Modules
- Uses Industry Standard High Voltage Transformers

APPLICATIONS

- Note Book LCD displays
- Transportable Computers
- Web Tablet LCD displays

PRODUCT HIGHLIGHT

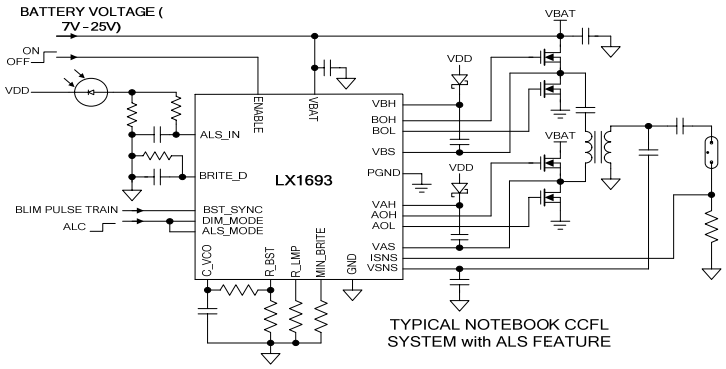

TYPICAL NOTEBOOK CCFL SYSTEM with ALS FEATURE

PACKAGE ORDER INFO

T_A (°C)	LQ Plastic MLPQ 4x5mm 28 pin RoHS Compliant / Pb-free
-20 to 70	**LX1693CLQ**

Note: Available in Tape & Reel. Append the letters "TR" to the part number. (i.e. LX1693CLQ-TR)

Copyright © 2007

Microsemi
Analog Mixed Signal Group
11861 Western Avenue, Garden Grove, CA. 92841, 714-898-8121, Fax: 714-893-2570

Microsemi

INFORMATION

Thank you for your interest in Microsemi® Analog Mixed Signal products.

The full data sheet for this device contains proprietary information.

To obtain a copy, please contact your local Microsemi sales representative. The name of your local representative can be obtained at the following link
http://www.microsemi.com/contact/contactfind.asp

or

Contact us directly by sending an email to:
IPGdatasheets@microsemi.com
Be sure to specify the data sheet you are requesting and include your company name and contact information and or vcard.

We look forward to hearing from you.

www.Microsemi.COM

Copyright

Microsemi
Analog Mixed Signal Group
11861 Western Avenue, Garden Grove, CA. 92841, 714-898-8121, Fax: 714-893-2570