Ordering number : ENA1785C

LV8736V

Monolithic Linear IC

PWM Constant-Current Control Stepper Motor Driver

ON Semiconductor®

http://onsemi.com

Overview

The LV8736V is a 2-channel H-bridge driver IC that can switch a stepper motor driver, which is capable of micro-step drive and supports 1/8 step excitation, and two channels of a brushed motor driver, which supports forward, reverse, brake, and standby of a motor. It is ideally suited for driving brushed DC motors and stepper motors used in office equipment and amusement applications.

Function

- Single-channel PWM current control stepper motor driver (selectable with DC motor driver channel 2) incorporated.
- BiCDMOS process IC
- Low on resistance (upper side : 0.75Ω ; lower side : 0.5Ω ; total of upper and lower : 1.25Ω ; Ta = 25°C, I_O = 1A)
- Excitation mode can be set to Full step, Half step, Quarter step , or 1/8 step
- Excitation step proceeds only by step signal input
- Motor current selectable in four steps
- Output short-circuit protection circuit (selectable from latch-type or auto-reset-type) incorporated
- Unusual condition warning output pins
- Built-in thermal shutdown circuit
- No control power supply required

Specifications

Absolute Maximum Ratings at Ta = 25°C

Parameter	Symbol	Conditions	Ratings	Unit
Supply voltage	VM max	VM , VM1 , VM2	36	V
Output peak current	I_O peak	tw ≤ 10ms , duty 20% Per 1ch	1.5	A
Output current	I_O max	Per 1ch	1	A
Logic input voltage	V_{IN} max	ST , DM , STEP/DC22 , FR/DC21 , MD2/DC12 , ATT1 , ATT2 , EMM , RST/BLK , OE/CMK	-0.3 to +6	V
MONI/EMO input voltage	Vmo/Vemo		-0.3 to +6	V
Allowable power dissipation	Pd max	*	3.05	W
Operating temperature	Topr		-40 to +85	°C
Storage temperature	Tstg		-55 to +150	°C

* Specified circuit board : 90.0mm×90.0mm×1.6mm, glass epoxy 2-layer board, with backside mounting.

Caution 1) Absolute maximum ratings represent the value which cannot be exceeded for any length of time.

Caution 2) Even when the device is used within the range of absolute maximum ratings, as a result of continuous usage under high temperature, high current, high voltage, or drastic temperature change, the reliability of the IC may be degraded. Please contact us for the further details.

Stresses exceeding Maximum Ratings may damage the device. Maximum Ratings are stress ratings only. Functional operation above the Recommended Operating Conditions is not implied. Extended exposure to stresses above the Recommended Operating Conditions may affect device reliability.

ORDERING INFORMATION

See detailed ordering and shipping information on page 26 of this data sheet.

Semiconductor Components Industries, LLC, 2013
June, 2013

Allowable Operating Ratings at Ta = 25°C

Parameter	Symbol	Conditions	Ratings	Unit
Supply voltage range	VM	VM, VM1, VM2	9 to 32	V
Logic input voltage	V_{IN}	ST, DM, STEP/DC22, FR/DC21, MD1/DC11, MD2/DC12, ATT1, ATT2, EMM, RST/BLK, OE/CMK	0 to 5.5	V
VREF input voltage range	VREF		0 to 3	V

Electrical Characteristics at Ta = 25°C, VM = 24V, VREF = 1.5V

Parameter		Symbol	Conditions	Ratings			Unit
				min	typ	max	
Standby mode current drain		IMst	ST = "L" , IM(VM)+IM1(VM1)+IM2(VM2)		100	400	μA
Current drain		IM	ST = "H", OE = "L", with no load , IM(VM)+IM1(VM1)+IM2(VM2)		3.2	5	mA
VREG5 output voltage		Vreg5	I_O = -1mA	4.5	5	5.5	V
Thermal shutdown temperature		TSD	Design guarantee	150	180	200	°C
Thermal hysteresis width		ΔTSD	Design guarantee		40		°C
Motor driver							
Output on resistance		Ronu	I_O = 1A, Upper-side on resistance		0.75	0.97	Ω
		Rond	I_O = 1A, Lower-side on resistance		0.5	0.65	Ω
Output leakage current		$I_O$leak				50	μA
Diode forward voltage		VD	ID = -1A		1.2	1.4	V
Logic input voltage	High	V_{IN}h	ST, DM, STEP/DC22, FR/DC21, MD1/DC11, MD2/DC12, ATT1, ATT2, EMM, RST/BLK, OE/CMK	2.0		5.5	V
	Low	V_{IN}l		0		0.8	V
Logic pin input current other OE/CMK pin		I_{IN}L	ST, DM, STEP/DC22, FR/DC21, MD1/DC11, MD2/DC12, ATT1, ATT2, EMM, RST/BLK, V_{IN} = 0.8V	4	8	12	μA
		I_{IN}H	V_{IN} = 5V	30	50	70	μA
OE / CMK pin input current		I_{CMK}L	DM = "L", OE/CMK = 0.8V	4	8	12	μA
		I_{CMK}H	DM = "L", OE/CMK = 5V	30	50	70	μA
		I_{CMK}	DM = "H", OE/CMK = 0V	-32	-25	-18	μA
OE/CMK pin current LIMIT mask threshold voltage.		Vt_{CMK}	DM = "H"	1.2	1.5	1.8	V
Current setting comparator threshold voltage (current step switching)	1/8 step drive	Vtdac0_2W	Step 0 (When initialized : channel 1 comparator level)	0.291	0.3	0.309	V
		Vtdac1_2W	Step 1 (Initial state+1)	0.285	0.294	0.303	V
		Vtdac2_2W	Step 2 (Initial state+2)	0.267	0.276	0.285	V
		Vtdac3_2W	Step 3 (Initial state+3)	0.240	0.249	0.258	V
		Vtdac4_2W	Step 4 (Initial state+4)	0.201	0.21	0.219	V
		Vtdac5_2W	Step 5 (Initial state+5)	0.157	0.165	0.173	V
		Vtdac6_2W	Step 6 (Initial state+6)	0.107	0.114	0.121	V
		Vtdac7_2W	Step 7 (Initial state+7)	0.053	0.06	0.067	V
	Quarter step drive	Vtdac0_W	Step 0 (When initialized : channel 1 comparator level)	0.291	0.3	0.309	V
		Vtdac2_W	Step 2 (Initial state+1)	0.267	0.276	0.285	V
		Vtdac4_W	Step 4 (Initial state+2)	0.201	0.21	0.219	V
		Vtdac6_W	Step 6 (Initial state+3)	0.107	0.114	0.121	V
	Half step drive	Vtdac0_H	Step 0 (When initialized : channel 1 comparator level)	0.291	0.3	0.309	V
		Vtdac4_H	Step 4 (Initial state+1)	0.201	0.21	0.219	V
	Full step drive	Vtdac4_F	Step 4' (When initialized : channel 1 comparator level)	0.291	0.3	0.309	V
Current setting comparator threshold voltage (current attenuation rate switching)		Vtatt00	ATT1 = L, ATT2 = L	0.291	0.3	0.309	V
		Vtatt01	ATT1 = H, ATT2 = L	0.232	0.24	0.248	V
		Vtatt10	ATT1 = L, ATT2 = H	0.143	0.15	0.157	V
		Vtatt11	ATT1 = H, ATT2 = H	0.053	0.06	0.067	V

Continued on next page.

Continued from preceding page.

Parameter	Symbol	Conditions	Ratings			Unit
			min	typ	max	
Chopping frequency	Fchop	Cchop = 200pF	40	50	60	kHz
CHOP pin charge/discharge current	Ichop		7	10	13	μA
Chopping oscillation circuit threshold voltage	Vtup		0.8	1	1.2	V
VREF pin input current	Iref	VREF = 1.5V	-0.5			μA
MONI pin saturation voltage	Vsatmon	Imoni = 1mA			400	mV
Charge pump						
VG output voltage	VG		28	28.7	29.8	V
Rise time	tONG	VG = 0.1μF		200	500	μS
Oscillator frequency	Fosc		90	125	150	kHz
Output short-circuit protection						
EMO pin saturation voltage	Vsatemo	Iemo = 1mA			400	mV
CEM pin charge current	Icem	Vcem = 0V	7	10	13	μA
CEM pin threshold voltage	Vtcem		0.8	1	1.2	V

Package Dimensions

unit : mm (typ)

3333A

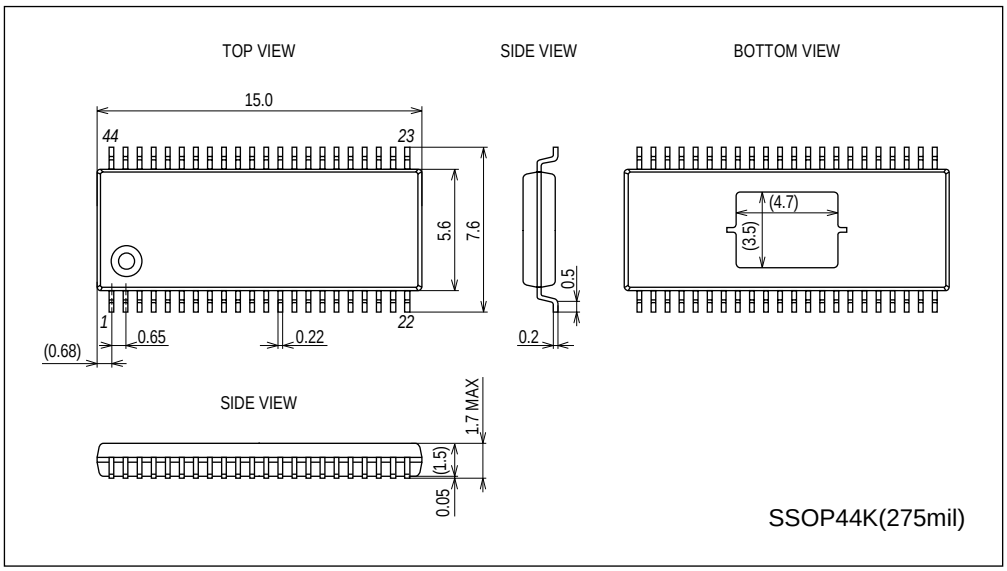

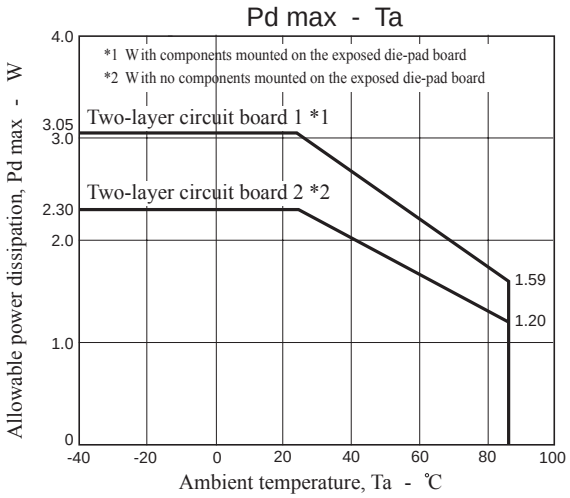

Substrate Specifications **(Substrate recommended for operation of LV8736V)**

Size : 90mm × 90mm × 1.6mm (two-layer substrate [2S0P])
Material : Glass epoxy
Copper wiring density : L1 = 85% / L2 = 90%

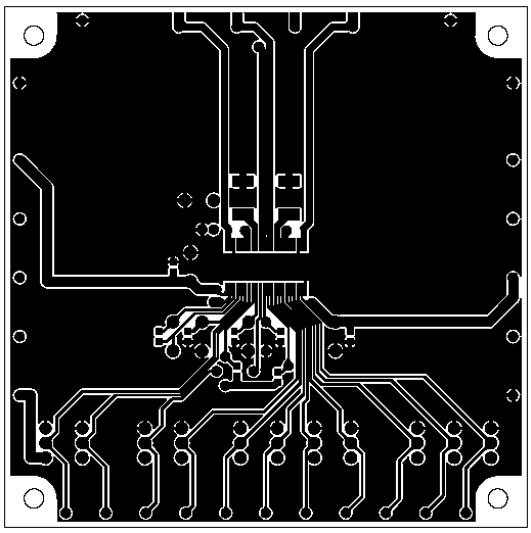

L1 : Copper wiring pattern diagram

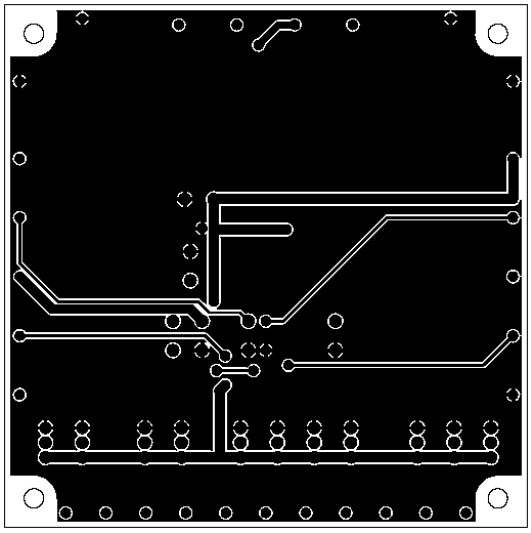

L2 : Copper wiring pattern diagram

Cautions

1) The data for the case with the Exposed Die-Pad substrate mounted shows the values when 90% or more of the Exposed Die-Pad is wet.

2) For the set design, employ the derating design with sufficient margin.
Stresses to be derated include the voltage, current, junction temperature, power loss, and mechanical stresses such as vibration, impact, and tension.
Accordingly, the design must ensure these stresses to be as low or small as possible.
The guideline for ordinary derating is shown below :
(1)Maximum value 80% or less for the voltage rating
(2)Maximum value 80% or less for the current rating
(3)Maximum value 80% or less for the temperature rating

3) After the set design, be sure to verify the design with the actual product.
Confirm the solder joint state and verify also the reliability of solder joint for the Exposed Die-Pad, etc.
Any void or deterioration, if observed in the solder joint of these parts, causes deteriorated thermal conduction, possibly resulting in thermal destruction of IC.

Pin Assignment

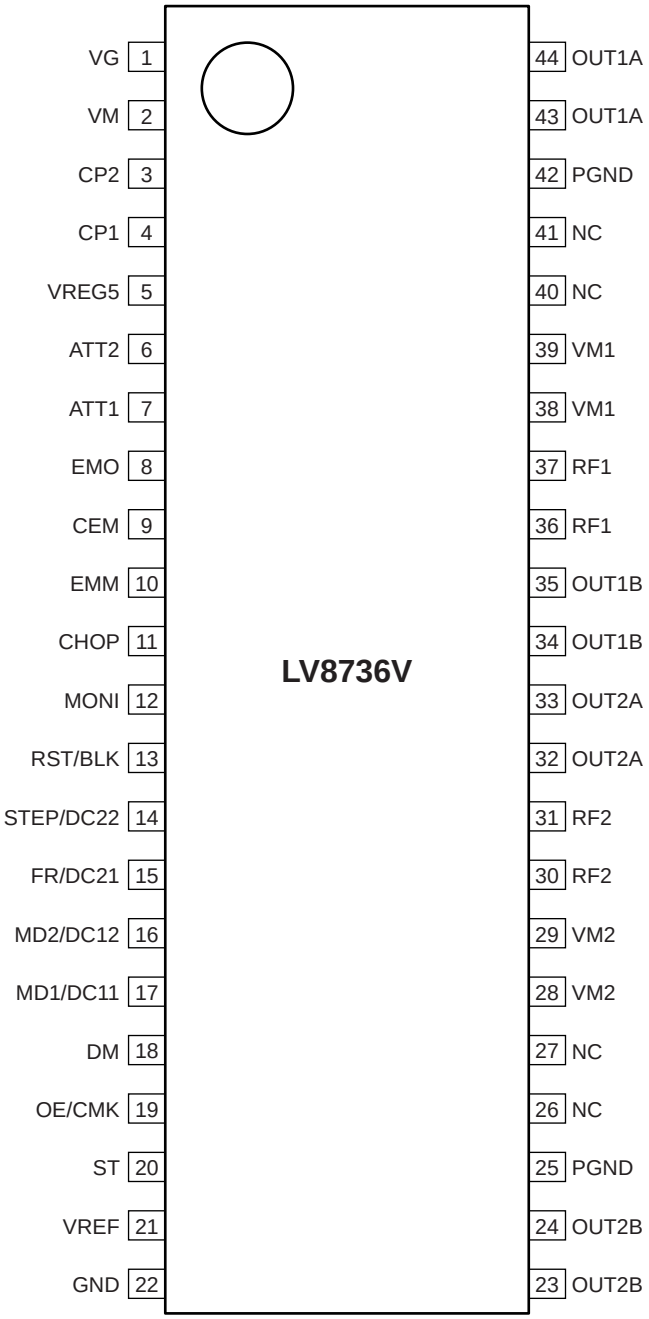

Top view

Block Diagram

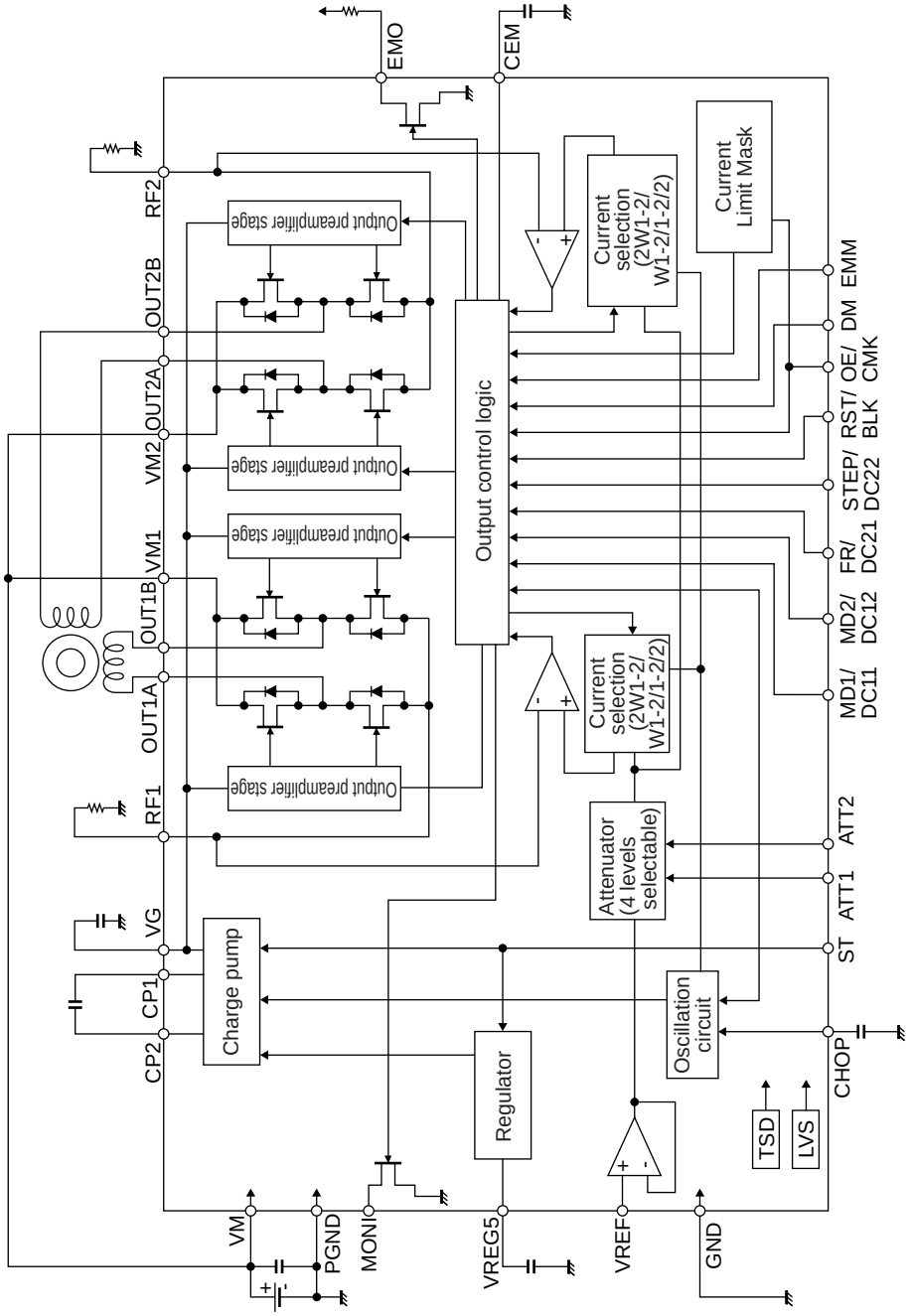

Pin Functions

Pin No.	Pin Name	Pin Functtion	Equivalent Circuit
6	ATT2	Motor holding current switching pin.	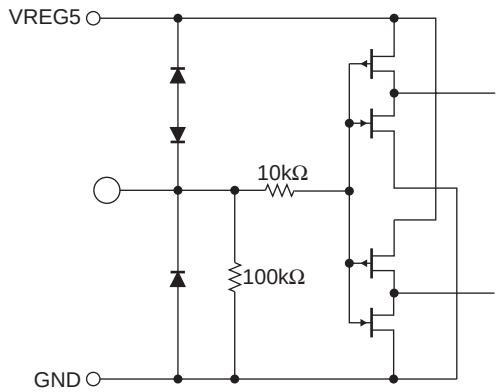
7	ATT1	Motor holding current switching pin.	
10	EMM	Output short-circuit protection mode switching pin.	
13	RST/BLK	RESET input pin (STM) / Blanking time switching pin (DCM).	
14	STEP/DC22	STEP signal input pin (STM) / Channel 2 output control input pin 2 (DCM).	
15	FR/DC21	CW / CCW signal input pin (STM) / Channel 2 output control input pin 1 (DCM).	
16	MD2/DC12	Excitation mode switching pin 2 (STM) / Channel 1 output control input pin 2 (DCM).	
17	MD1/DC11	Excitation mode switching pin 1 (STM) / Channel 1 output control input pin 1 (DCM).	
18	DM	Drive mode (STM/DCM) switching pin.	
20	ST	Chip enable pin.	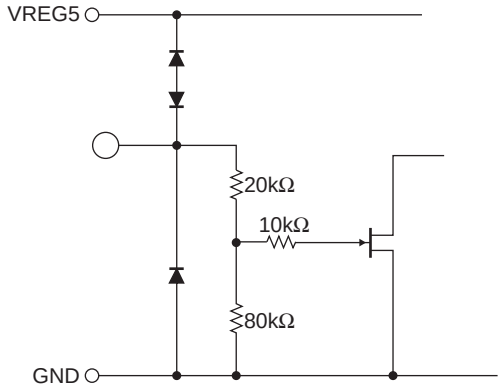
23, 24	OUT2B	Channel 2 OUTB output pin.	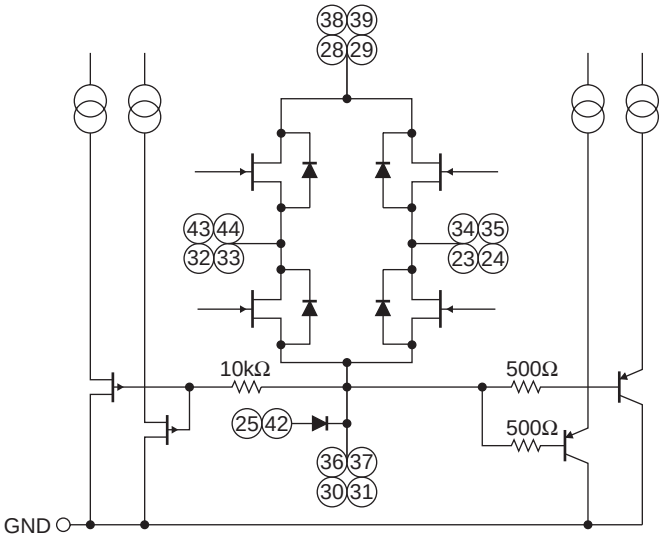
25, 42	PGND	Power system ground.	
28, 29	VM2	Channel 2 motor power supply connection pin.	
30, 31	RF2	Channel 2 current-sense resistor connection pin.	
32, 33	OUT2A	Channel 2 OUTA output pin.	
34, 35	OUT1B	Channel 1 OUTB output pin.	
36, 37	RF1	Channel 1 current-sense resistor connection pin.	
38, 39	VM1	Channel 1 motor power supply pin.	
43, 44	OUT1A	Channel 1 OUTA output pin.	

Continued on next page.

Continued from preceding page.

Pin No.	Pin Name	Pin Functtion	Equivalent Circuit
1 2 3 4	VG VM CP2 CP1	Charge pump capacitor connection pin. Motor power supply connection pin. Charge pump capacitor connection pin. Charge pump capacitor connection pin.	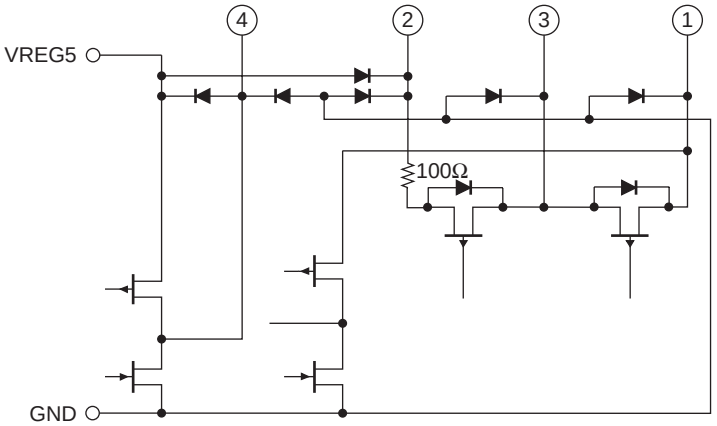
21	VREF	Constant current control reference voltage input pin.	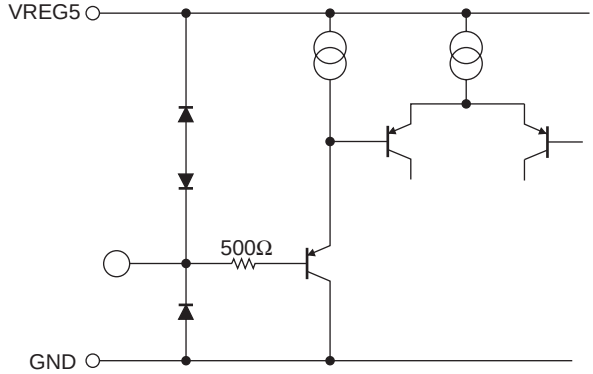
5	VREG5	Internal power supply capacitor connection pin.	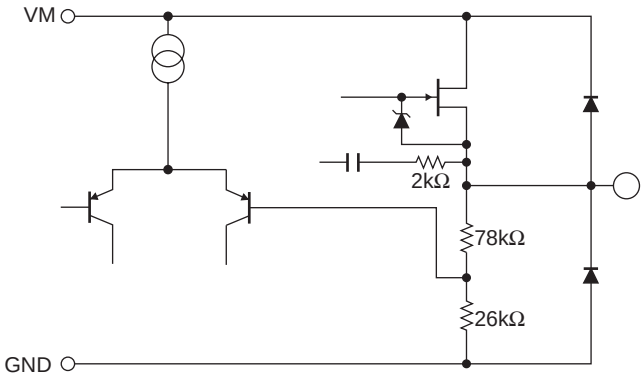
8 12	EMO MONI	Output short-circuit state warning output pin. Position detection monitor pin.	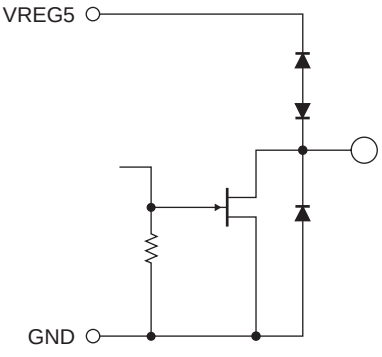

Continued on next page.

Continued from preceding page.

Pin No.	Pin Name	Pin Functtion	Equivalent Circuit
9	CEM	Pin to connect the output short-circuit state detection time setting capacitor.	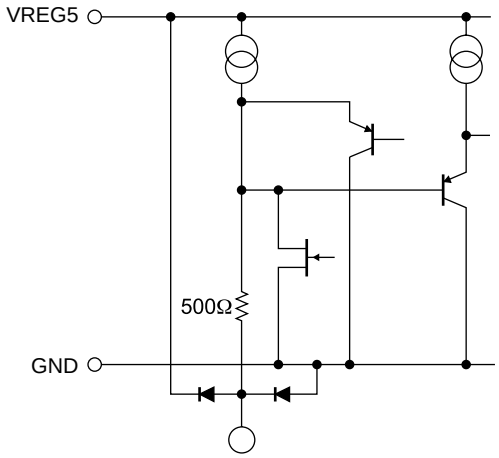
11	CHOP	Chopping frequency setting capacitor connection pin.	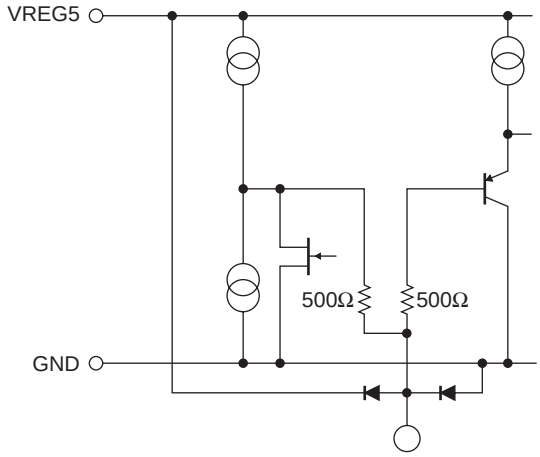
19	OE	Output enable signal input pin.	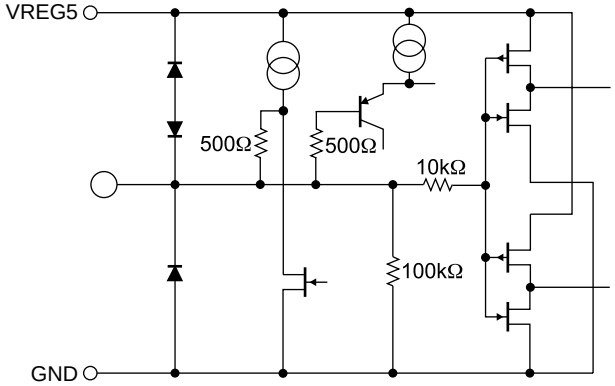
22	GND	Ground.	
26, 27 40, 41	NC	No Connection (No internal connection to the IC)	

Description of operation

1.Input Pin Function

Each input terminal has the function to prevent the flow of the current from an input to a power supply.
Therefore, Even if a power supply(VM) is turned off in the state that applied voltage to an input terminal, the electric current does not flow into the power supply.

1-1) Chip enable function

This IC is switched between standby and operating mode by setting the ST pin. In standby mode, the IC is set to power-save mode and all logic is reset. In addition, the internal regulator circuit and charge pump circuit do not operate in standby mode.

ST	Mode	Internal regulator	Charge pump
Low or Open	Standby mode	Standby	Standby
High	Operating mode	Operating	Operating

1-2) Drive mode switching pin function

The IC drive mode is switched by setting the DM pin. In STM mode, stepper motor channel 1 can be controlled by the CLK-IN input. In DCM mode, DC motor channel 2 or stepper motor channel 1 can be controlled by parallel input. Stepper motor control using parallel input is Full step or Half step full torque.

DM	Drive mode	Application
Low or Open	STM mode	Stepper motor channel 1 (CLK-IN)
High	DCM mode	DC motor channel 2 or stepper motor channel 1 (parallel)

2.STM mode (DM = Low or Open)

2-1) STEP pin function

Input		Operating mode
ST	STP	
Low	*	Standby mode
High		Excitation step proceeds
High		Excitation step is kept

2-2) Excitation mode setting function

MD1	MD2	Excitation mode	Initial position	
			Channel 1	Channel 2
Low	Low	Full step excitation	100%	-100%
High	Low	Half step excitation	100%	0%
Low	High	Quarter step excitation	100%	0%
High	High	1/8 step excitation	100%	0%

This is the initial position of each excitation mode in the initial state after power-on and when the counter is reset.

2-3) Position detection monitoring function

The MONI position detection monitoring pin is of an open drian type.
When the excitation position is in the initial position, the MONI output is placed in the ON state.
(Refer to "Examples of current waveforms in each of the excitation modes.")

2-4) Setting constant-current control reference current

This IC is designed to automatically exercise PWM constant-current chopping control for the motor current by setting the output current. Based on the voltage input to the VREF pin and the resistance connected between RF and GND, the output current that is subject to the constant-current control is set using the calculation formula below :

I_{OUT} = (VREF/5)/RF resistance

* The above setting is the output current at 100% of each excitation mode.

The voltage input to the VREF pin can be switched to four-step settings depending on the statuses of the two inputs, ATT1 and ATT2. This is effective for reducing power consumption when motor holding current is supplied.

Attenuation function for VREF input voltage

ATT1	ATT2	Current setting reference voltage attenuation ratio
Low	Low	100%
High	Low	80%
Low	High	50%
High	High	20%

The formula used to calculate the output current when using the function for attenuating the VREF input voltage is given below.

I_{OUT} = (VREF/5) × (attenuation ratio)/RF resistance

Example : At VREF of 1.5V, a reference voltage setting of 100% [(ATT1, ATT2) = (L, L)] and an RF resistance of 0.5Ω, the output current is set as shown below.

I_{OUT} = 1.5V/5 × 100%/0.5Ω = 0.6A

If, in this state, (ATT1, ATT2) is set to (H, H), IOUT will be as follows :

I_{OUT} = 0.6A × 20% = 120mA

In this way, the output current is attenuated when the motor holding current is supplied so that power can be conserved.

2-5) Input timing

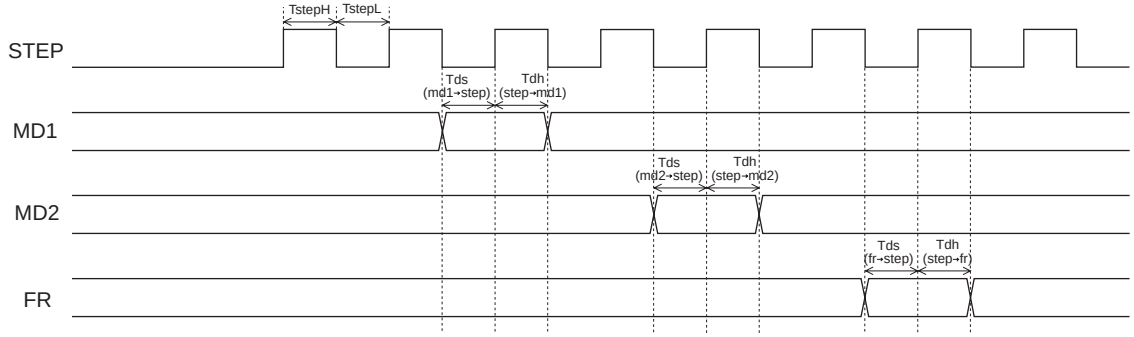

TstepH/TstepL : Clock H/L pulse width (min 500ns)
Tds : Data set-up time (min 500ns)
Tdh : Data hold time (min 500ns)

2-6) Blanking period

If, when exercising PWM constant-current chopping control over the motor current, the mode is switched from decay to charge, the recovery current of the parasitic diode may flow to the current sensing resistance, causing noise to be carried on the current sensing resistance pin, and this may result in erroneous detection. To prevent this erroneous detection, a blanking period is provided to prevent the noise occurring during mode switching from being received. During this period, the mode is not switched from charge to decay even if noise is carried on the current sensing resistance pin.

In the stepper motor driver mode (DM = Low or Open) of this IC, the blanking time is fixed at approximately 1μs.

In the DC motor driver mode (DM = High), the blanking time can be switched to one of two levels using the RST/BLK pin. (Refer to "Blanking time switching function.")

2-7) Reset function

Only STM mode is pin at the DCM mode BLK: It operates as a switch function of the time of the blanking.

RST	Operating mode
Low	Normal operation
High	Reset state

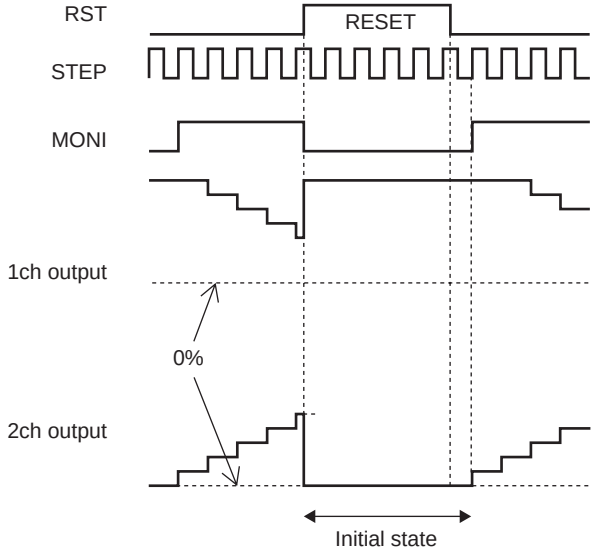

When the RST pin is set to High, the excitation position of the output is forcibly set to the initial state, and the MONI output is placed in the ON state. When RST is then set to Low, the excitation position is advanced by the next STEP input.

2-8) Output enable function

Only STM mode is pin at the DCM mode CMK: It operates as current LIMIT mask function.

OE	Operating mode
Low	Output ON
High	Output OFF

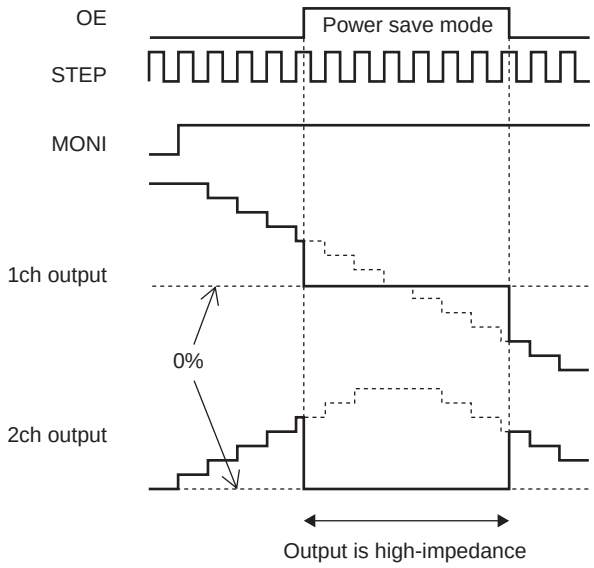

When the OE pin is set High, the output is forced OFF and goes to high impedance.
However, the internal logic circuits are operating, so the excitation position proceeds when the STEP signal is input. Therefore, when OE is returned to Low, the output level conforms to the excitation position proceeded by the STEP input.

2-9) Forward/reverse switching function

FR	Operating mode
Low	Clockwise (CW)
High	Counter-clockwise (CCW)

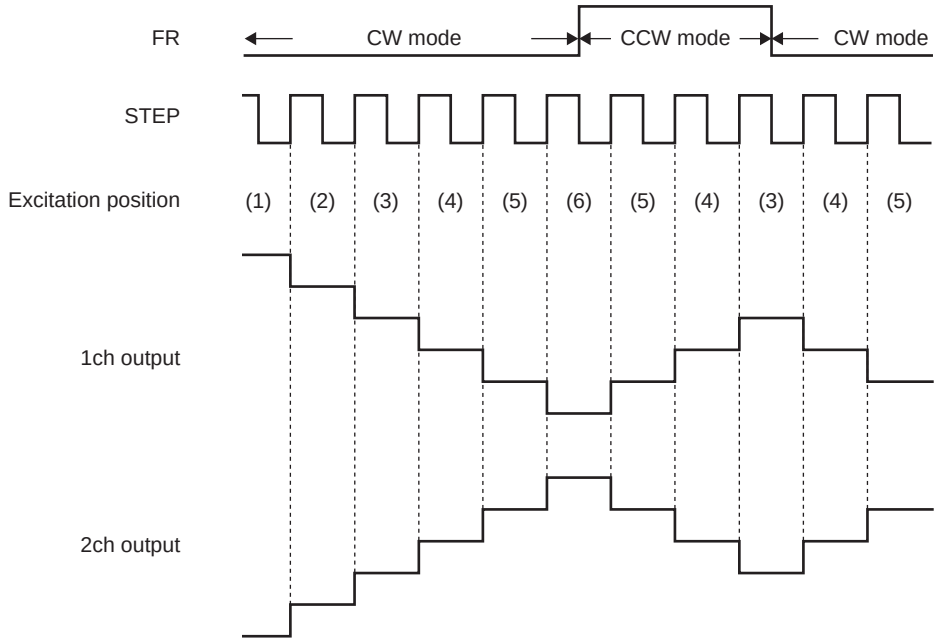

The internal D/A converter proceeds by one bit at the rising edge of the input STEP pulse.
In addition, CW and CCW mode are switched by setting the FR pin.
In CW mode, the channel 2 current phase is delayed by 90° relative to the channel 1 current.
In CCW mode, the channel 2 current phase is advanced by 90° relative to the channel 1 current.

2-10) Chopping frequency setting

For constant-current control, this IC performs chopping operations at the frequency determined by the capacitor (Cchop) connected between the CHOP pin and GND.
The chopping frequency is set as shown below by the capacitor (Cchop) connected between the CHOP pin and GND.

$$Fchop = Ichop / (Cchop \times Vtchop \times 2) \ (Hz)$$

Ichop : Capacitor charge/discharge current, typ 10μA
Vtchop : Charge/discharge hysteresis voltage (Vtup-Vtdown), typ 0.5V

For instance, when Cchop is 200pF, the chopping frequency will be as follows :

$$Fchop = 10\mu A / (200pF \times 0.5V \times 2) = 50kHz$$

2-11) Output current vector locus (one step is normalized to 90 degrees)

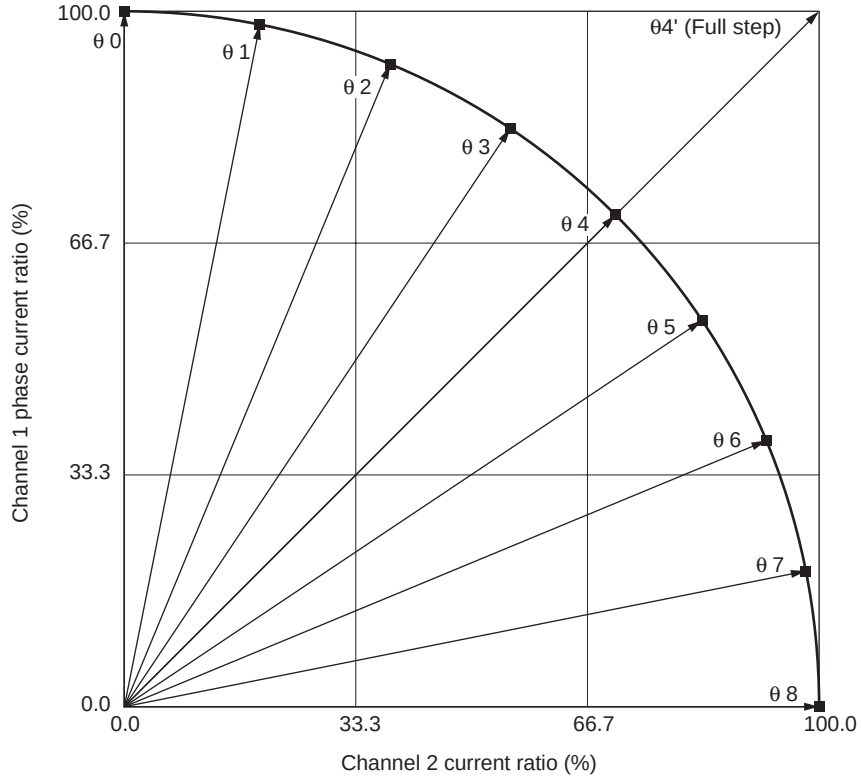

Setting current ration in each excitation mode

STEP	1/8 step (%)		Quarter step (%)		Half step (%)		Full step (%)	
	Channel 1	Channel 2	Channel 1	Channel 2	Channel 1	Channel 2	Channel 1	Channel 2
θ0	100	0	100	0	100	0		
θ1	98	20						
θ2	92	38	92	38				
θ3	83	55						
θ4	70	70	70	70	70	70	100	100
θ5	55	83						
θ6	38	92	38	92				
θ7	20	98						
θ8	0	100	0	100	0	100		

2-12) Typical current waveform in each excitation mode

Full step excitation (CW mode)

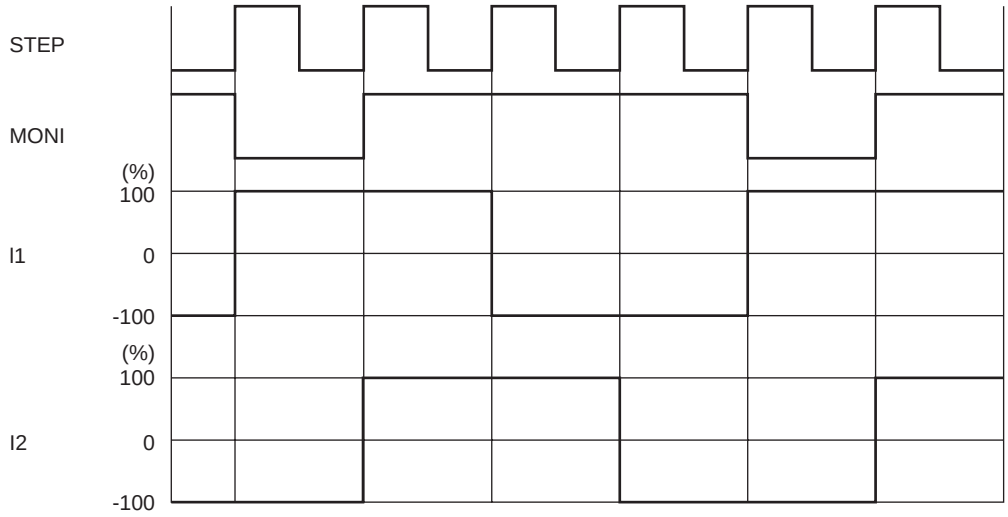

Half step excitation (CW mode)

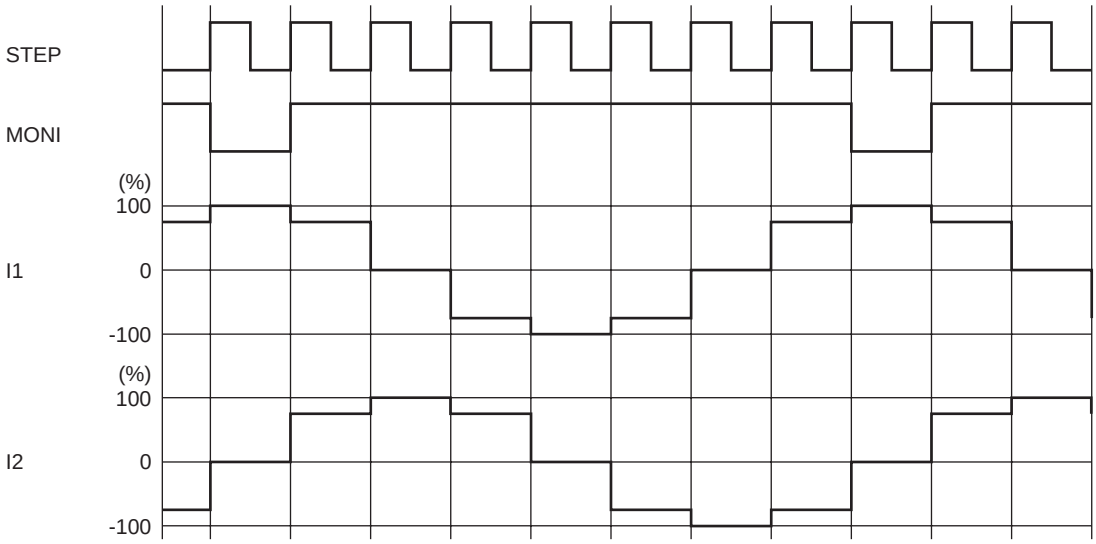

Quarter step excitation (CW mode)

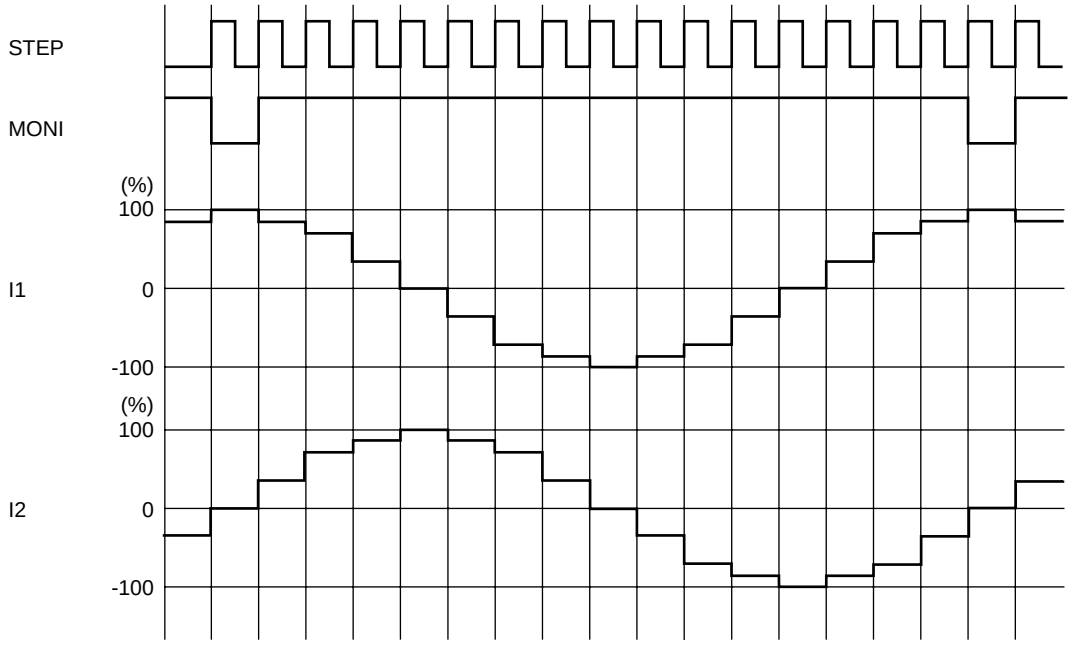

1/8 step excitation (CW mode)

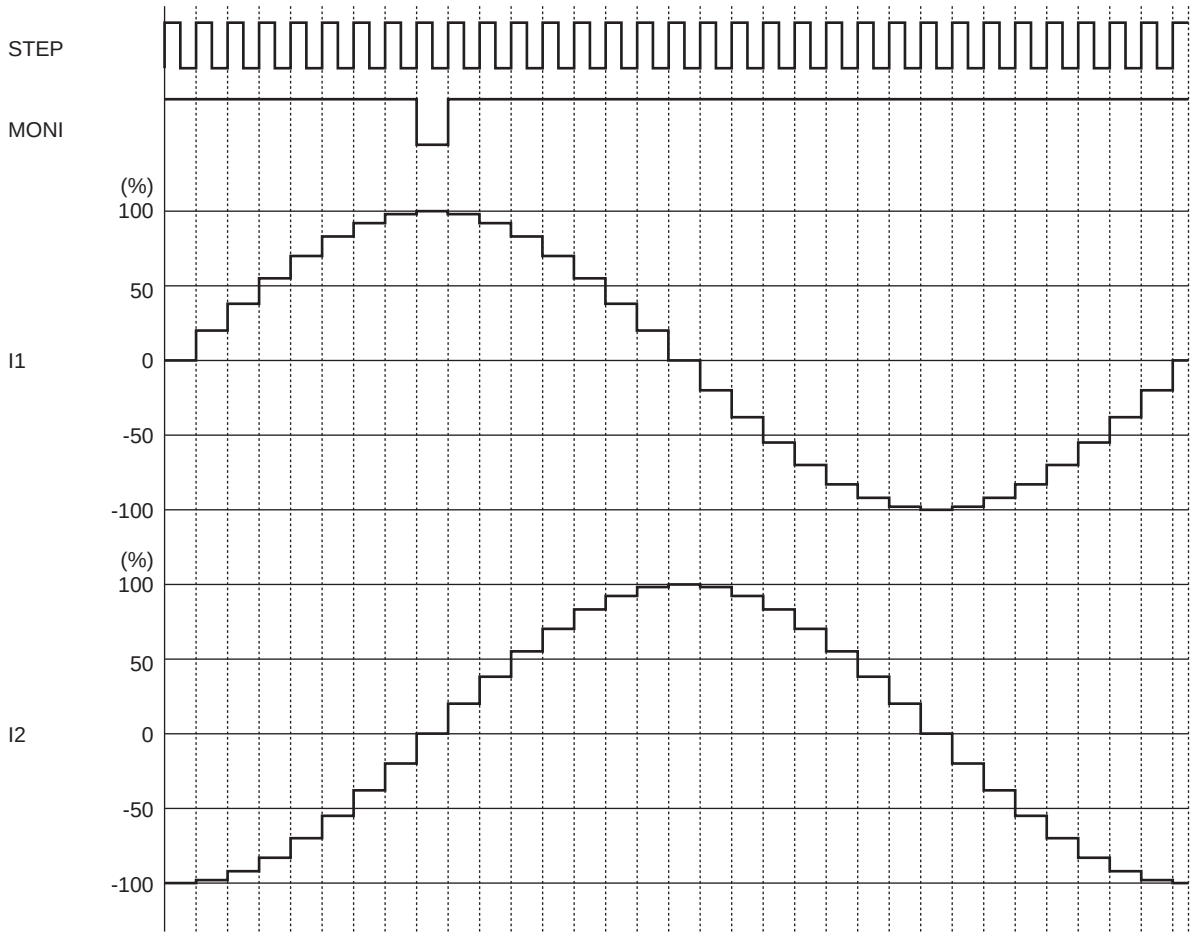

2-13) Current control operation specification

(Sine wave increasing direction)

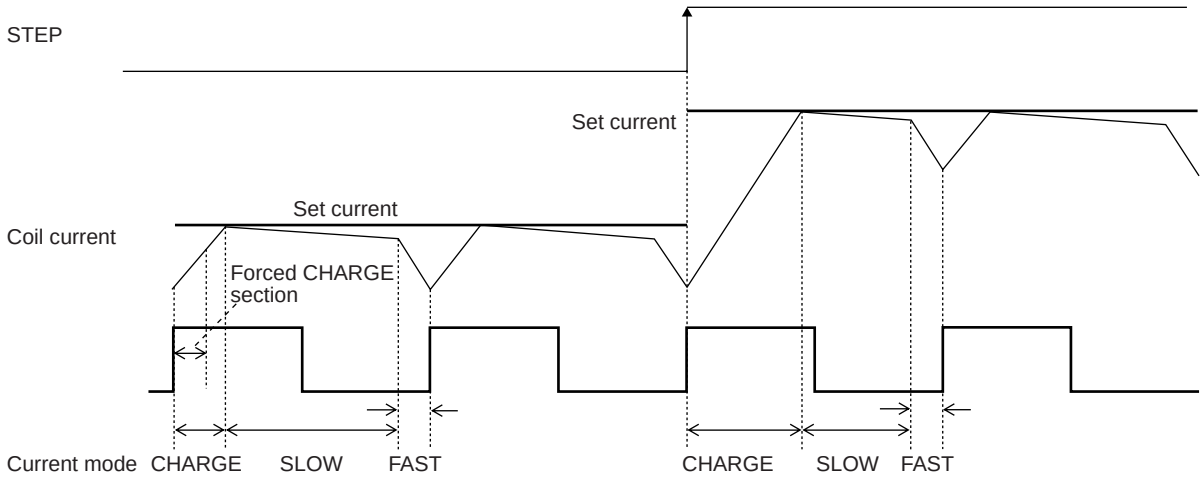

(Sine wave decreasing direction)

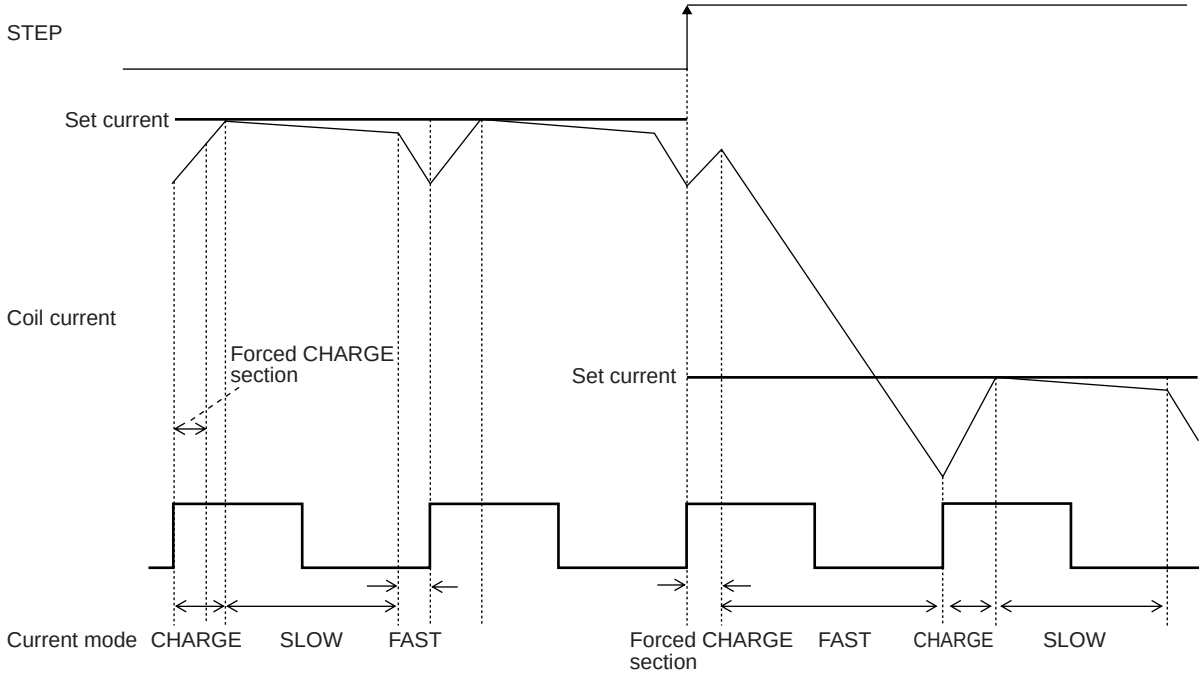

In each current mode, the operation sequence is as described below :

- At rise of chopping frequency, the CHARGE mode begins. (In the time defined as the "blanking time," the CHARGE mode is forced regardless of the magnitude of the coil current (ICOIL) and set current (IREF).)
- The coil current (ICOIL) and set current (IREF) are compared in this blanking time.

  When (ICOIL < IREF) state exists ;

  The CHARGE mode up to ICOIL ≥ IREF, then followed by changeover to the SLOW DECAY mode, and finally by the FAST DECAY mode for approximately 1μs.

  When (ICOIL < IREF) state does not exist ;

  The FAST DECAY mode begins. The coil current is attenuated in the FAST DECAY mode till one cycle of chopping is over.

Above operations are repeated. Normally, the SLOW (+FAST) DECAY mode continues in the sine wave increasing direction, then entering the FAST DECAY mode till the current is attenuated to the set level and followed by the SLOW DECAY mode.

3.**DCM Mode (DM-High)**

3-1) DCM mode output control logic

Parallel input		Output		Mode
DC11 (21)	DC12 (22)	OUT1 (2) A	OUT1 (2) B	
Low	Low	OFF	OFF	Standby
High	Low	High	Low	CW (Forward)
Low	High	Low	High	CCW (Reverse)
High	High	Low	Low	Brake

3-2) Blanking time switching function

Only the DCM mode. At STM mode RST pin : It operates as RESET function.

BLK	Blanking time
Low	2μs
High	3μs

3-3) Current limit reference voltage setting function

By setting a current limit, this IC automatically exercises short braking control to ensure that when the motor current has reached this limit, the current will not exceed it.

(Current limit control time chart)

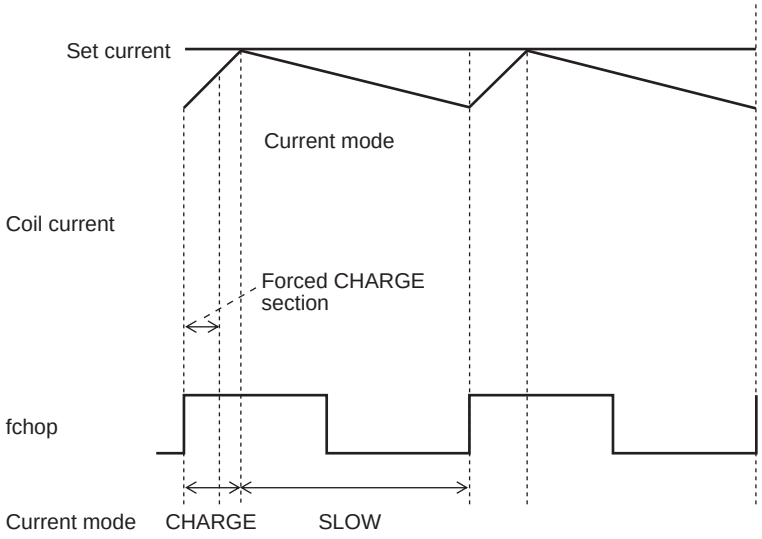

The limit current is set as calculated on the basis of the voltage input to the VREF pin and the resistance between the RF pin and GND using the formula given below.

Ilimit = (VREF/5) /RF resistance

The voltage applied to the VREF pin can be switched to any of the four setting levels depending on the statuses of the two inputs, ATT1 and ATT2.

Function for attenuating VREF input voltage

ATT1	ATT2	Current setting reference voltage attenuation ratio
Low	Low	100%
High	Low	80%
Low	High	50%
High	High	20%

The formula used to calculate the output current when using the function for attenuating the VREF input voltage is given below.

Ilimit = (VREF/5) × (attenuation ratio) /RF resistance

Example : At VREF of 1.5V, a reference voltage setting of 100% [(ATT1, ATT2) = (L, L)] and an RF resistance of 0.5Ω, the output current is set as shown below.

Ilimit = 1.5V/5 × 100%/0.5Ω = 0.6A

If, in this state, (ATT1, ATT2) has been set to (H, H), Ilimit will be as follows :

Ilimit = 0.6A × 20% = 120mA

3-4) Current LIMIT mask function

Only the DCM mode. At STM mode OE pin : It operates as output enable function.

The mask can do current LIMIT function during the fixed time set with the CMK pin at the DCM mode. It is effective to make it not hang to the limiter by the start current of the motor to set current LIMIT low.

The charge is begun, current LIMIT function is done to the CMK capacitor meanwhile when switching to forward/ reverse mode, and the mask is done. Afterwards, the mask is released when the voltage of the CMK pin reaches set voltage (typ 1.5V), and the current limit function works.

When 2ch side begins forward (reverse) operation while the mask on 1ch side is operating, the CMK pin is discharged one degree up to a constant voltage, and begins charging again because the CMK pin becomes 2ch using combinedly. Meanwhile, 1ch side and 2ch side enter the state of the mask.

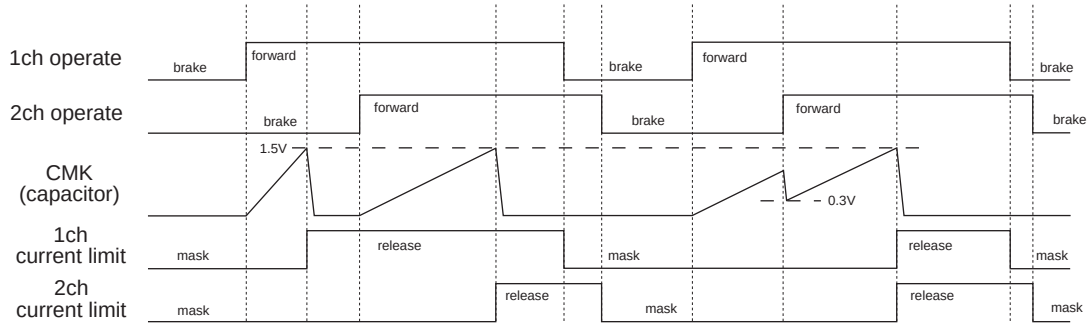

When the capacitor is not connected, the function of LIMIT in the current can be switched to operation/nonoperating state by the state of the input of the CMK pin.

CMK	Current LIMIT function
"L"	nonoperating
"H" or OPEN	operation

3-5) Current LIMIT mask time (Tcmk)

The time of the mask of current LIMIT function can be set by connecting capacitor C_{CMK} between CMK pin - GND. Decide the value of capacitor C_{CMK} according to the following expressions.

Mask time : T_{CMK} $T_{CMK} \approx -C_{CMK} \times R \times 1n (1- Vt_{CMK} / (I_{CMK} \times R))$ (sec)

Vt_{CMK} : LIMIT mask threshold voltage typ. 1.5V

I_{CMK} : CMK pin charge current typ. 25μA

R : Internal resistance typ. 100kΩ

3-6) Typical current waveform in each excitation mode when stepper motor parallel input control

Full step excitation (CW mode)

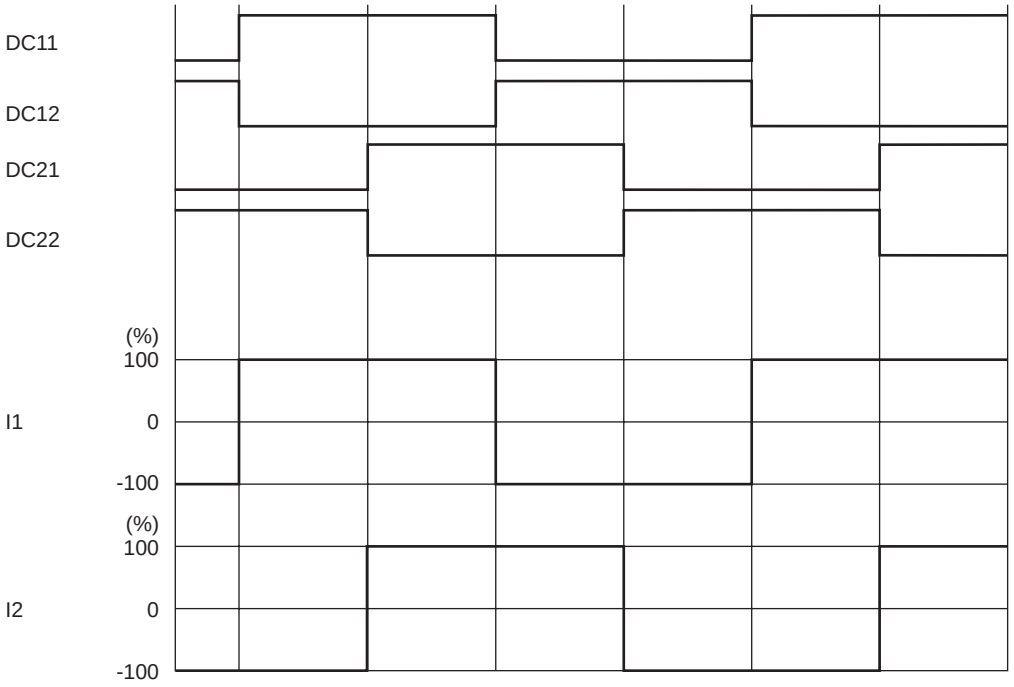

Half step excitation full torque (CW mode)

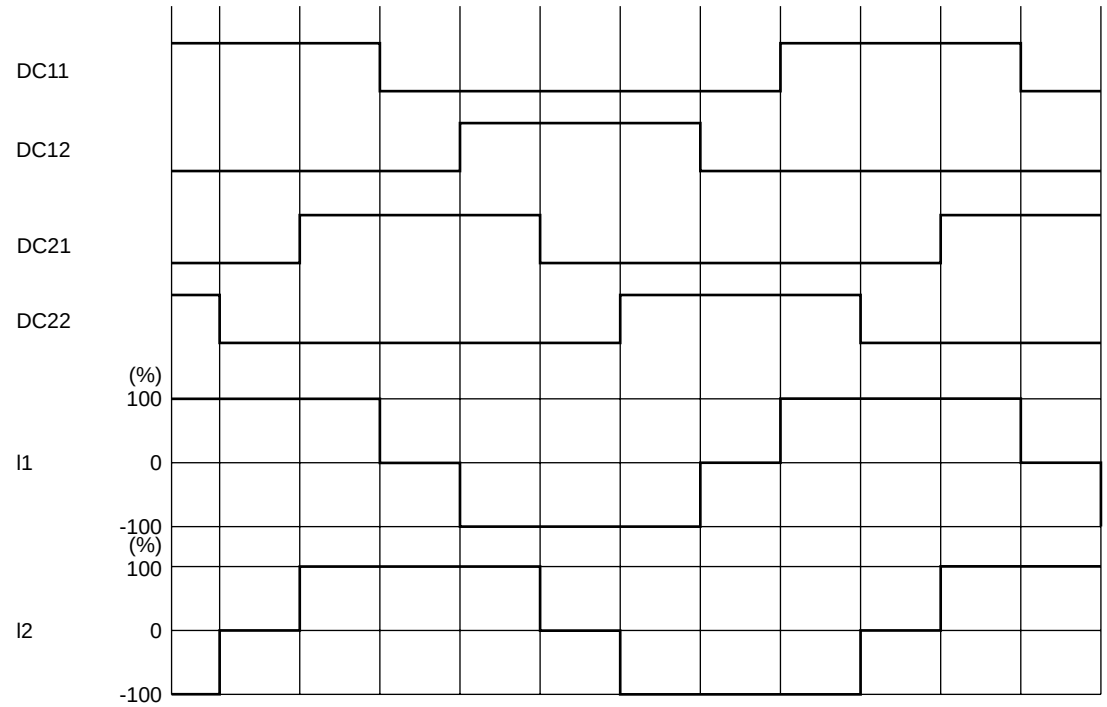

4.Output short-circuit protection function

This IC incorporates an output short-circuit protection circuit that, when the output has been shorted by an event such as shorting to power or shorting to ground, sets the output to the standby mode and turns on the warning output in order to prevent the IC from being damaged. In the stepping motor driver (STM) mode (DM = Low), this function sets the output to the standby mode for both channels by detecting the short-circuiting in one of the channels. In the DC motor driver mode (DM = High), channels 1 and 2 operate independently. (Even if the output of channel 1 has been short-circuited, channel 2 will operate normally.)

4-1) Output short-circuit protection operation changeover function

Changeover to the output short-circuit protection of IC is made by the setting of EMM pin.

EMM	State
Low or Open	Latch method
High	Auto reset method

4-2) Latch type

In the latch mode, when the output current exceeds the detection current level, the output is turned OFF, and this state is held.

The detection of the output short-circuited state by the IC causes the output short-circuit protection circuit to be activated.

When the short-circuited state continues for the period of time set using the internal timer (approximately 2μs), the output in which the short-circuiting has been detected is first set to OFF. After this, the output is set to ON again as soon as the timer latch time (Tcem) described later has been exceeded, and if the short-circuited state is still detected, all the outputs of the channel concerned are switched to the standby mode, and this state is held.

This state is released by setting ST to low.

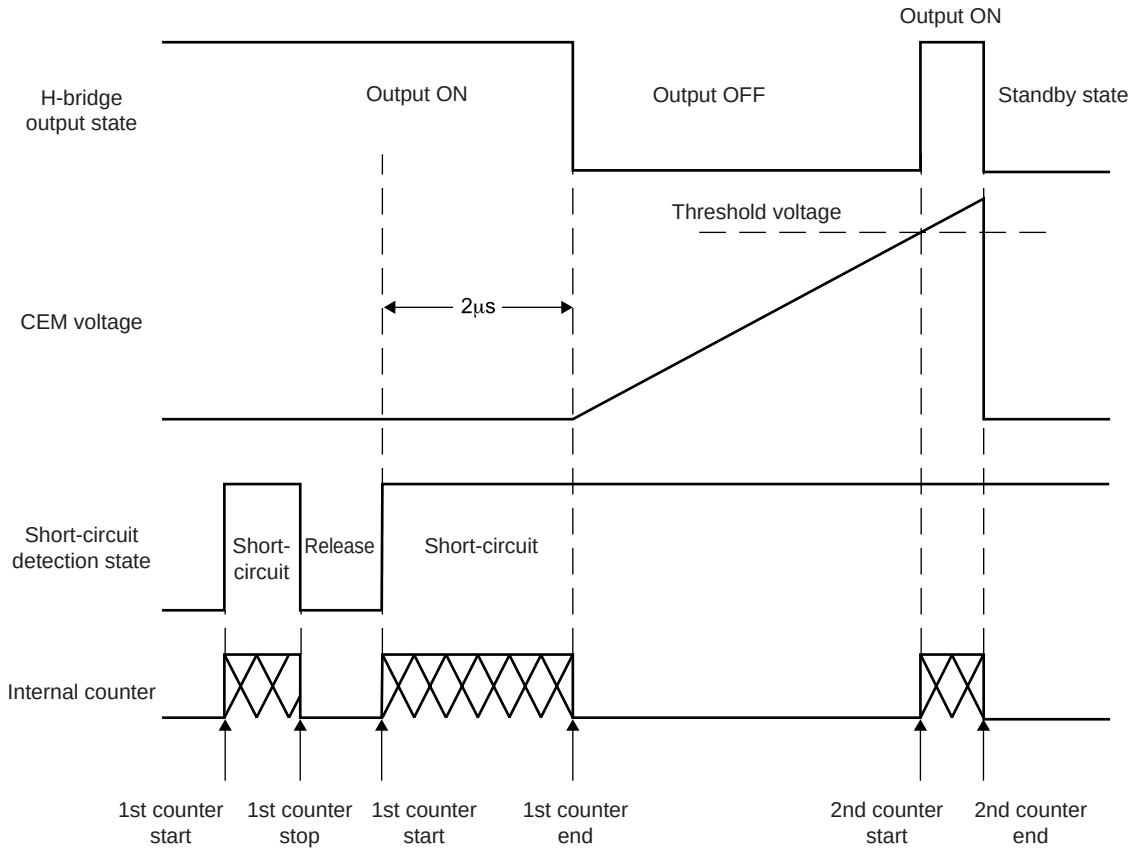

4-3) Auto reset type

In the automatic reset mode, when the output current exceeds the detection current level, the output waveform changes to the switching waveform.

As with the latch system, when the output short-circuited state is detected, the short-circuit protection circuit is activated. When the operation of the short-circuit detection circuit exceeds the timer latch time (Tcem) described later, the output is changed over to the standby mode and is reset to the ON mode again in 2ms (typ). In this event, if the overcurrent mode still continues, the switching mode described above is repeated until the overcurrent mode is canceled.

4-4) Unusual condition warning output pins (EMO, MONI)

The LV8731V is provided with the EMO pin which notifies the CPU of an unusual condition if the protection circuit operates by detecting an unusual condition of the IC. This pin is of the open-drain output type and when an unusual condition is detected, the EMO output is placed in the ON (EMO = Low) state.
In the DC motor driver mode (DM = High), the MONI pin also functions as a warning output pin.
The functions of the EMO pin and MONI pin change as shown below depending on the state of the DM pin.

When the DM is low (STM mode) :
EMO : Unusual condition warning output pin
MONI : Excitation initial position detection monitoring

When the DM is high (DCM) mode) :
EMO : Channel 1 warning output pin
MONI : Channel 2 warning output pin

Furthermore, the EMO (MONI) pin is placed in the ON state when one of the following conditions occurs.

1. Shorting-to-power, shorting-to-ground, or shorting-to-load occurs at the output pin and the output short-circuit protection circuit is activated.
2. The IC junction temperature rises and the thermal protection circuit is activated.

Unusual condition	DM = L (STM mode)		DM = H (DCM mode)	
	EMO	MONI	EMO	MONI
Channel 1 short-circuit detected	ON	-	ON	-
Channel 2 short-circuit detected	ON	-	-	ON
Overheating condition detected	ON	-	ON	ON

4-5) Timer latch time (Tcem)

The time taken for the output to be set to OFF when the output has been short-circuited can be set using capacitor Ccem, connected between the CEM pin and GND. The value of capacitor Ccem is determined by the formula given below.

Timer latch : Tcem $Tcem \approx Ccem \times Vtcem/Icem$ [sec]
Vtcem : Comparator threshold voltage, typ 1V
Icem : CEM pin charge current, typ 10μA

5. Thermal shutdown function

The thermal shutdown circuit is included, and the output is turned off when junction temperature Tj exceeds 180**°C** and the abnormal state warning output is turned on at the same time.
When the temperature falls hysteresis level, output is driven again (automatic restoration) The thermal shutdown circuit doesn't guarantee protection of the set and the destruction prevention because it works at the temperature that is higher than rating (Tjmax=150**°C**) of the junction temperature

TSD=180**°C** (typ)
ΔTSD=40**°C** (typ)

6.Charge Pump Circuit

When the ST pin is set High, the charge pump circuit operates and the VG pin voltage is boosted from the VM voltage to the VM+VREG5 voltage.

If the VG pin voltage is not boosted to VM+4V or more, the output pin cannot be turned on. Therefore it is recommended that the drive of the motor is started after the time has passed tONG or more.

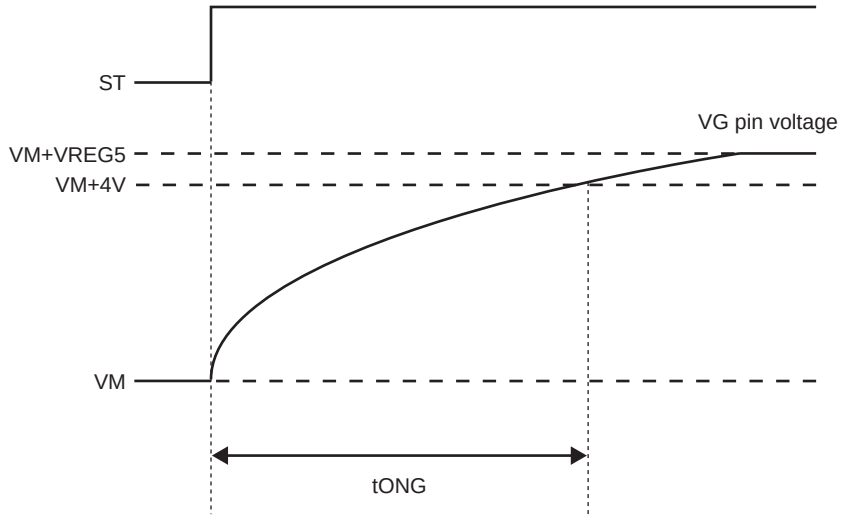

VG Pin Voltage Schematic View

7.Application Circuit Example

7-1)Stepper motor driver circuit (DM = Low)

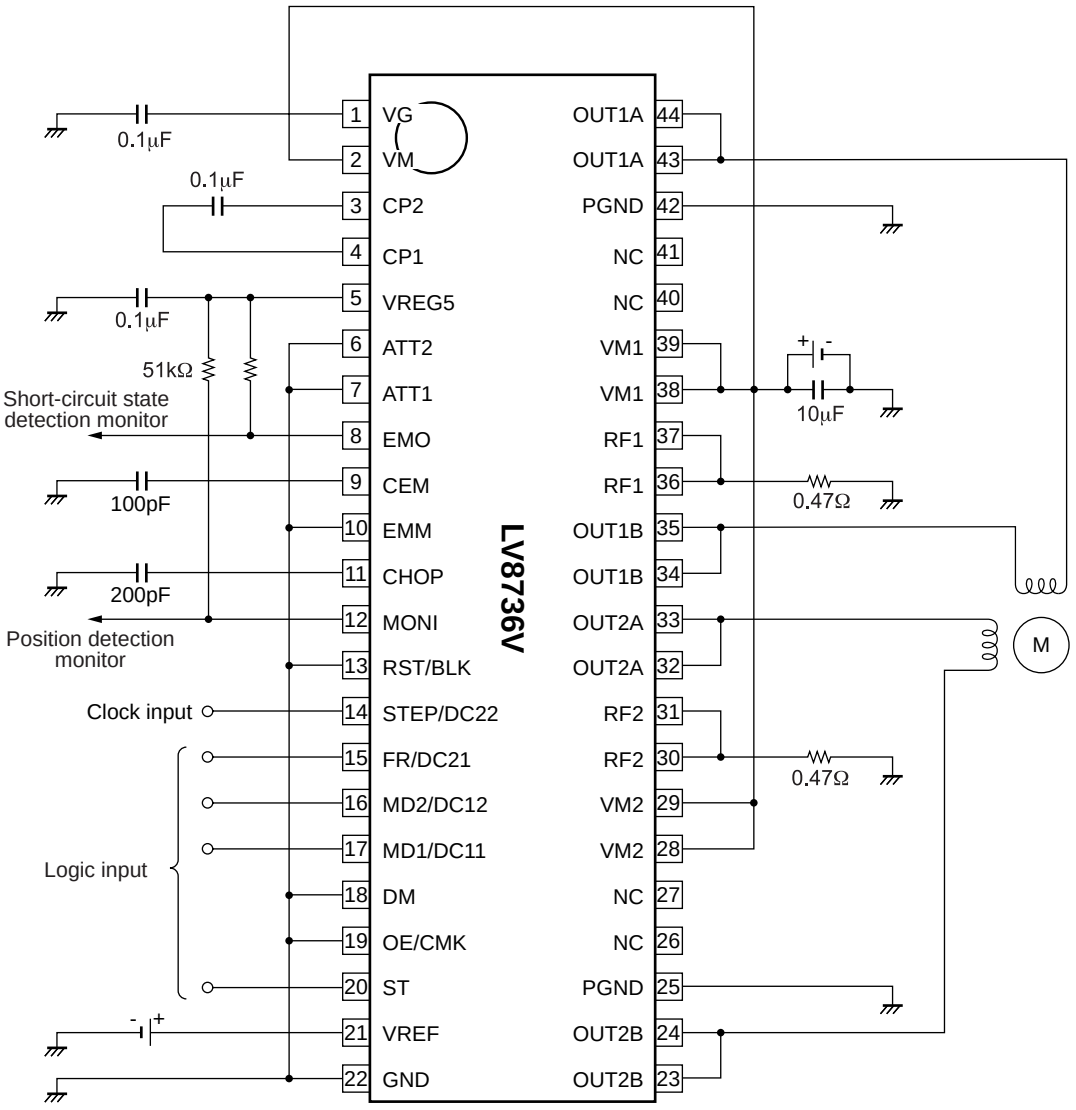

The formulae for setting the constants in the examples of the application circuits above are as follows :

Constant current (100%) setting

When VREF = 1.5V

I_{OUT} = VREF/5/RF resistance

= 1.5V/5/0.47Ω = 10.64A

Chopping frequency setting

Fchop = Ichop/ (Cchop × Vtchop × 2)

= 10μA/ (200pF × 0.5V × 2) = 50kHz

Timer latch time when the output is short-circuited

Tcem = Ccem × Vtcem/Icem

= 100pF × 1V/10μA = 10μs

7-2) DC motor driver circuit (DM = High, and the current limit function is in use.)

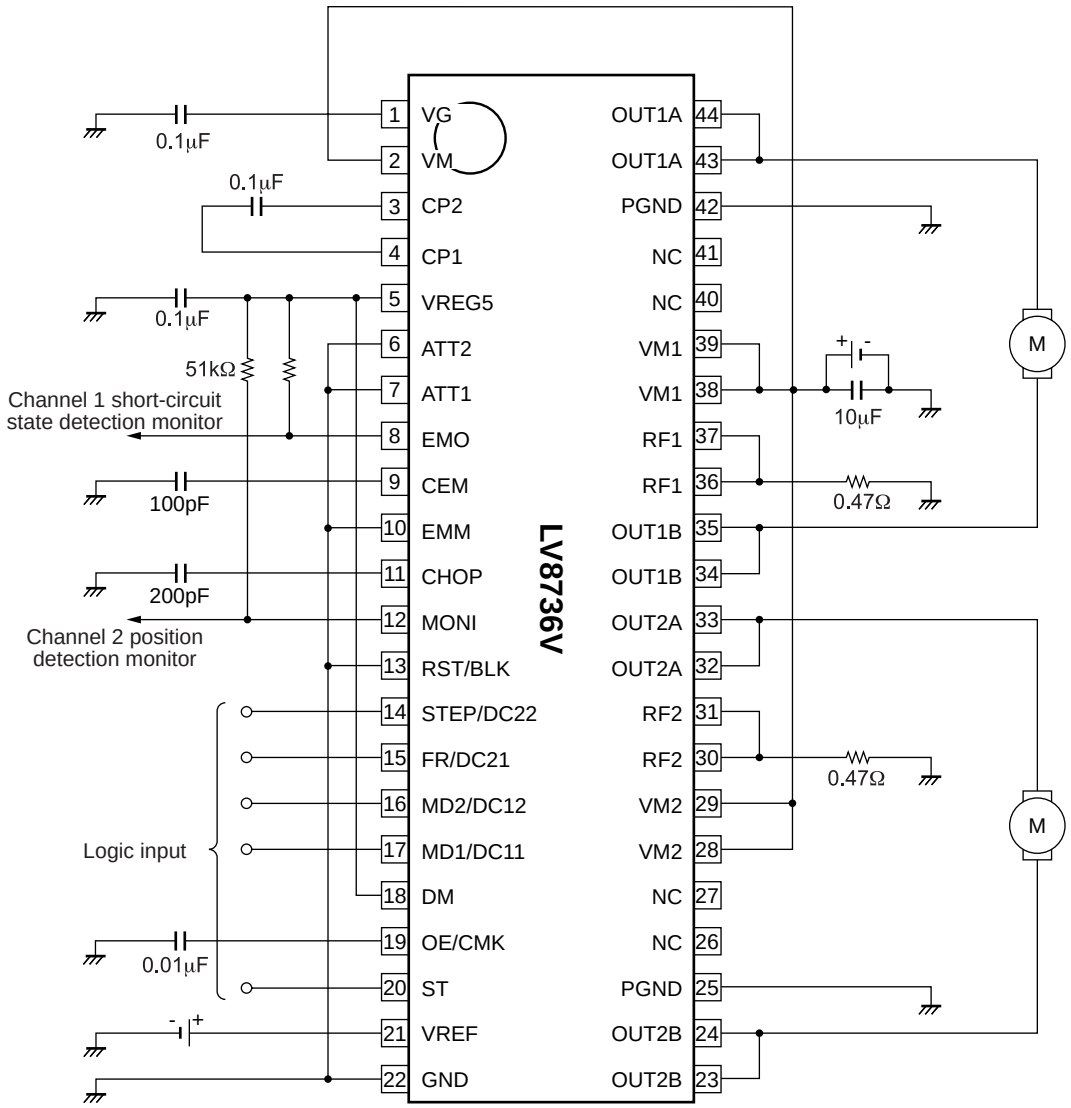

The formulae for setting the constants in the examples of the application circuits above are as follows :

Constant current limit (100%) setting

When VREF = 1.5V

Ilimit = VREF/5/RF resistance

= 1.5V/5/0.47Ω = 0.6A

Chopping frequency setting

Fchop = Ichop/ (Cchop × Vtchop × 2)

= 10μA/ (200pF × 0.5V × 2) = 50kHz

Timer latch time when the output is short-circuited

Tcem = Ccem × Vtcem/Icem

= 100pF × 1V/10μA = 10μs

ORDERING INFORMATION

Device	Package	Shipping (Qty / Packing)
LV8736V-TLM-H	SSOP44K (275mil) (Pb-Free / Halogen Free)	2000 / Tape & Reel
LV8736V-MPB-H	SSOP44K (275mil) (Pb-Free / Halogen Free)	30 / Fan-Fold

ON Semiconductor and the ON logo are registered trademarks of Semiconductor Components Industries, LLC (SCILLC). SCILLC owns the rights to a number of patents, trademarks, copyrights, trade secrets, and other intellectual property. A listing of SCILLC's product/patent coverage may be accessed at www.onsemi.com/site/pdf/Patent-Marking.pdf. SCILLC reserves the right to make changes without further notice to any products herein. SCILLC makes no warranty, representation or guarantee regarding the suitability of its products for any particular purpose, nor does SCILLC assume any liability arising out of the application or use of any product or circuit, and specifically disclaims any and all liability, including without limitation special, consequential or incidental damages. "Typical" parameters which may be provided in SCILLC data sheets and/or specifications can and do vary in different applications and actual performance may vary over time. All operating parameters, including "Typicals" must be validated for each customer application by customer's technical experts. SCILLC does not convey any license under its patent rights nor the rights of others. SCILLC products are not designed, intended, or authorized for use as components in systems intended for surgical implant into the body, or other applications intended to support or sustain life, or for any other application in which the failure of the SCILLC product could create a situation where personal injury or death may occur. Should Buyer purchase or use SCILLC products for any such unintended or unauthorized application, Buyer shall indemnify and hold SCILLC and its officers, employees, subsidiaries, affiliates, and distributors harmless against all claims, costs, damages, and expenses, and reasonable attorney fees arising out of, directly or indirectly, any claim of personal injury or death associated with such unintended or unauthorized use, even if such claim alleges that SCILLC was negligent regarding the design or manufacture of the part. SCILLC is an Equal Opportunity/Affirmative Action Employer. This literature is subject to all applicable copyright laws and is not for resale in any manner.