Ordering number : ENA2254A

# LV8716QA

**Bi-CDMOS LSI**

## Dual H-bridge Motor Driver

ON Semiconductor®

http://onsemi.com

### Overview

LV8716QA is 2ch H-bridge driver in the forward/reverse/brake/standby 4 mode corresponding to a low voltage drive. It is the best for the stepper motors for a battery drive, such as a mobile printer and DC motors.

### Function

- 2-channel PWM current control H-bridge driver
- BiCDMOS process IC
- Low ON resistance (Upper side : 0.65Ω, Lower side 0.35Ω : Ta=25°C, Io=1.0A)
- 4 mode of forward/reverse/brake/standby
- Available constant current control less RF resistance
- Built-in UVLO, TSD circuit

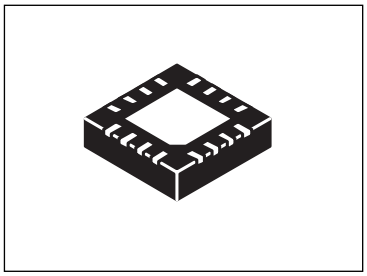

QFN16 3x3, 0.5P

### Specifications

**Absolute Maximum Ratings** at Ta = 25°C

| Parameter | Symbol | Conditions | Ratings | Unit |
|---|---|---|---|---|
| Motor supply voltage | VMmax | VM1, VM2 | 12.6 | V |
| Output peak current | Iopeak | Tw ≤ 10ms, duty 20% | 1.5 | A |
| Output current | Iomax | | 1.0 | A |
| Logic input voltage | VINmax | PS, IN1, IN2, IN3, IN4 | –0.3 to +6 | V |
| Allowable power dissipation | Pd max | * | 1.55 | W |
| Operating temperature | Topr | | –20 to +85 | °C |
| Storage temperature | Tstg | | –55 to +150 | °C |

*Specified circuit board : 57mm×57mm×1.6mm, glass epoxy 2-layer board, with backside mounting.

Caution 1) Absolute maximum ratings represent the values which cannot be exceeded for any length of time.

Caution 2) Even when the device is used within the range of absolute maximum ratings, as a result of continuous usage under high temperature, high current, high voltage, or drastic temperature change, the reliability of the IC may be degraded. Please contact us for the further details.

Stresses exceeding those listed in the Maximum Ratings table may damage the device. If any of these limits are exceeded, device functionality should not be assumed, damage may occur and reliability may be affected.

**ORDERING INFORMATION**

See detailed ordering and shipping information on page 15 of this data sheet.

Semiconductor Components Industries, LLC, 2014

**Recommended Operating Conditions** at Ta = 25°C

| Parameter | Symbol | Conditions | Ratings | Unit |
|---|---|---|---|---|
| Motor supply voltage range | VM | VM1,VM2 | 2.7 to 10.5 | V |
| Logic input voltage | VIN | PS,IN1,IN2,IN3,IN4 | 0 to 5.5 | V |

Functional operation above the stresses listed in the Recommended Operating Ranges is not implied. Extended exposure to stresses beyond the Recommended Operating Ranges limits may affect device reliability.

**Electrical Characteristics** at Ta = 25°C, $V_M$ = 7.2V

| Parameter | Symbol | Conditions | Ratings | | | Unit |
|---|---|---|---|---|---|---|
| | | | min | typ | max | |
| Standby mode current | IMstn | PS="L", I(VM1)+I(VM2) | | 0 | 500 | nA |
| Supply Current | IM | PS="H", IN1=IN3="H", No load I(VM1)+I(VM2) | | 1.4 | 1.82 | mA |
| VM low voltage cutting threshold voltage | Vthvm | | 2.3 | 2.45 | 2.6 | V |
| Low voltage hysteresis voltage | Vthhis | | 100 | 200 | 300 | mV |
| Thermal shutdown temperature | TSD | Design guarantee | 150 | 180 | 200 | °C |
| Thermal hysteresis width | ΔTSD | Design guarantee | | 40 | | °C |
| Output on resistance | Ronu | Io=1A,Source-side | | 0.65 | 0.85 | Ω |
| | Rond | Io=1A,Sink-side | | 0.35 | 0.45 | Ω |
| Output leakage current | Ioleak | | | | 20 | μA |
| Diode forward voltage | VD | ID=−1A | | 1 | 1.2 | V |
| Logic high-level input voltage | Vinh | PS,IN1,IN2,IN3,IN4 | 2.0 | | 5.5 | V |
| Logic low-level input voltage | Vinl | | 0 | | 0.8 | V |
| PS pin input current | IinL | VIN=0.8V | 5 | 8 | 11 | μA |
| | IinH | VIN=3.3V | 35 | 50 | 65 | μA |
| Logic pin input current (IN1,IN2,IN3,IN4) | IinL | VIN=0.8V | 5 | 8 | 11 | μA |
| | IinH | VIN=3.3V | 23 | 33 | 43 | μA |
| Chopping cycle | Tchop | | 12 | 16 | 20 | μs |
| Current detection reference voltage | Vref | | 0.194 | 0.2 | 0.206 | V |
| Output current detection current | Ircs | Io=0.5A, RCS=0V | 115 | 125 | 135 | μA |

Product parametric performance is indicated in the Electrical Characteristics for the listed test conditions, unless otherwise noted. Product performance may not be indicated by the Electrical Characteristics if operated under different conditions.

## Package Dimensions

unit : mm

**QFN16 3x3, 0.5P**
CASE 485G-01
ISSUE F

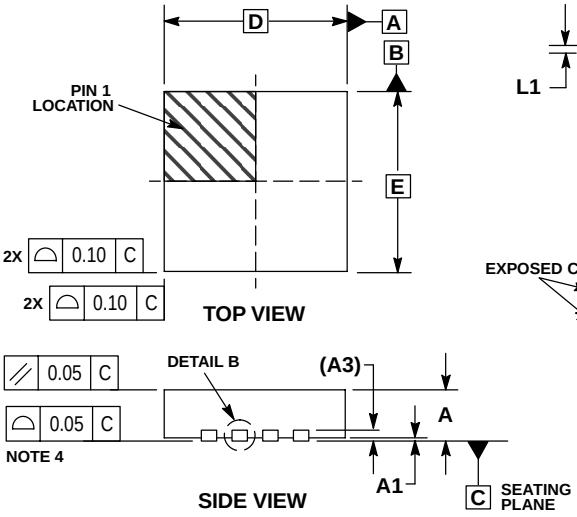


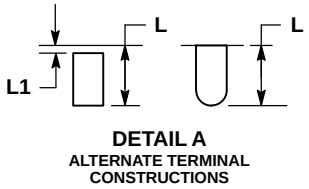


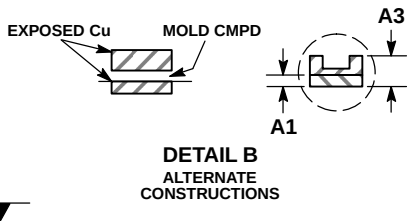


NOTES:
1. DIMENSIONING AND TOLERANCING PER ASME Y14.5M, 1994.
2. CONTROLLING DIMENSION: MILLIMETERS.
3. DIMENSION b APPLIES TO PLATED TERMINAL AND IS MEASURED BETWEEN 0.25 AND 0.30 MM FROM TERMINAL.
4. COPLANARITY APPLIES TO THE EXPOSED PAD AS WELL AS THE TERMINALS.

| | MILLIMETERS | | |
|---|---|---|---|
| DIM | MIN | NOM | MAX |
| A | 0.80 | 0.90 | 1.00 |
| A1 | 0.00 | 0.03 | 0.05 |
| A3 | | 0.20 REF | |
| b | 0.18 | 0.24 | 0.30 |
| D | | 3.00 BSC | |
| D2 | 1.65 | 1.75 | 1.85 |
| E | | 3.00 BSC | |
| E2 | 1.65 | 1.75 | 1.85 |
| e | | 0.50 BSC | |
| K | | 0.18 TYP | |
| L | 0.30 | 0.40 | 0.50 |
| L1 | 0.00 | 0.08 | 0.15 |

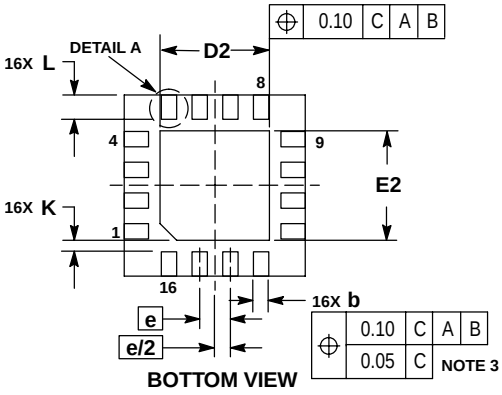


### GENERIC MARKING DIAGRAM*

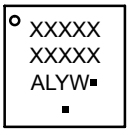


XXXXX = Specific Device Code
A = Assembly Location
L = Wafer Lot
Y = Year
W = Work Week
▪ = Pb−Free Package

(Note: Microdot may be in either location)

*This information is generic. Please refer to device data sheet for actual part marking. Pb−Free indicator, “G” or microdot “▪”, may or may not be present.

### RECOMMENDED SOLDERING FOOTPRINT*

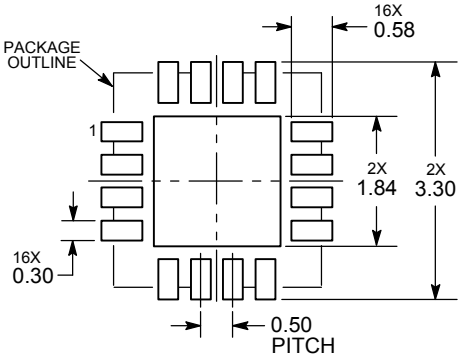


DIMENSIONS: MILLIMETERS

*For additional information on our Pb−Free strategy and soldering details, please download the ON Semiconductor Soldering and Mounting Techniques Reference Manual, SOLDERRM/D.

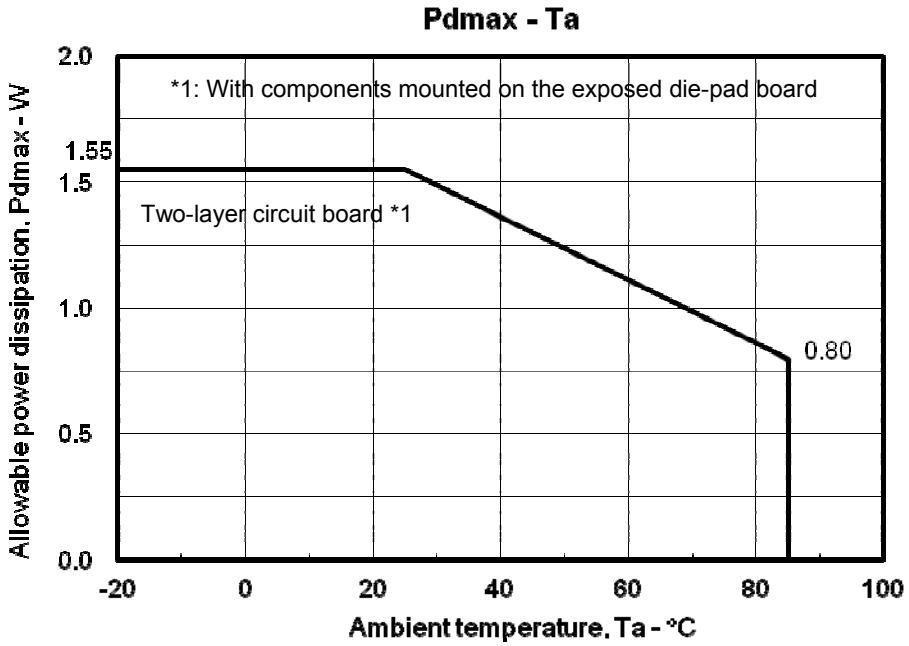
Pdmax - Ta
*1: With components mounted on the exposed die-pad board
Two-layer circuit board *1
0.80
Allowable power dissipation, Pdmax - W
Ambient temperature, Ta - °C
2.0
1.55
1.5
1.0
0.5
0.0
-20
0
20
40
60
80
100

**Substrate Specifications** (Substrate recommended for operation of LV8716QA)

| | |
|---|---|
| Size | : 90mm × 90mm × 1.6mm (two-layer substrate ) |
| Material | : Glass epoxy |
| Copper wiring density | : L1 = 85%, L2 = 90% |

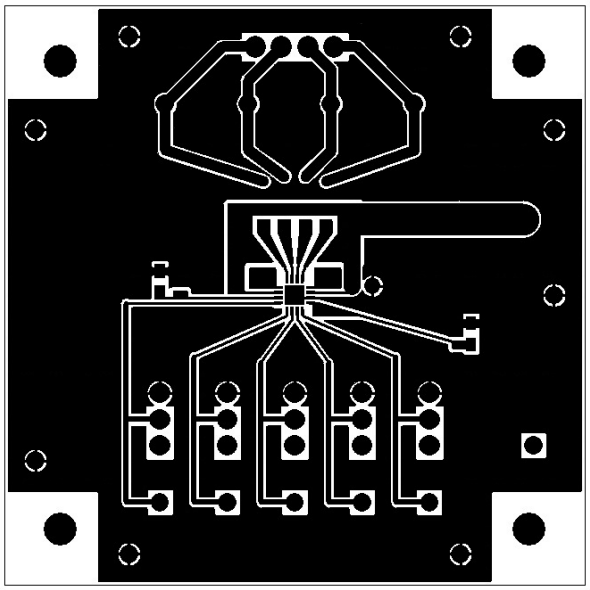

L1: Copper wiring pattern diagram

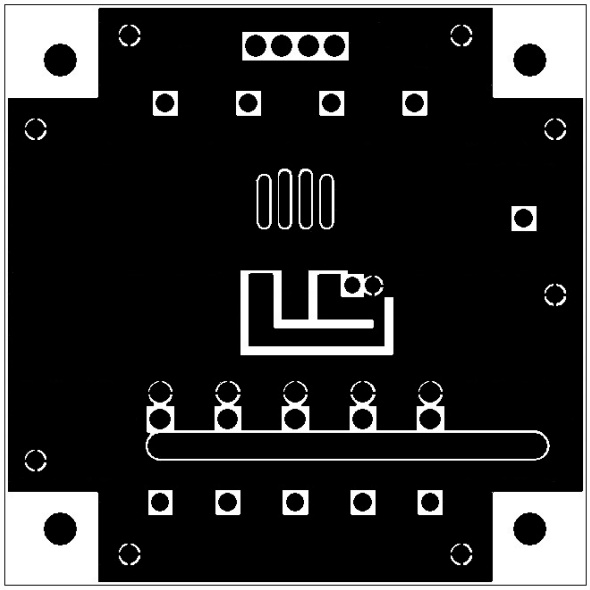

L2: Copper wiring pattern diagram

**Cautions**

1) The data for the case with the Exposed Die-Pad substrate mounted shows the values when 90% or more of the Exposed Die-Pad is wet.

2) For the set design, employ the derating design with sufficient margin.
Stresses to be derated include the voltage, current, junction temperature, power loss, and mechanical stresses such as vibration, impact, and tension.
Accordingly, the design must ensure these stresses to be as low or small as possible.
The guideline for ordinary derating is shown below:
(1) Maximum value 80% or less for the voltage rating
(2) Maximum value 80% or less for the current rating
(3) Maximum value 80% or less for the temperature rating

3) After the set design, be sure to verify the design with the actual product.
Confirm the solder joint state and verify also the reliability of solder joint for the Exposed Die-Pad, etc.
Any void or deterioration, if observed in the solder joint of these parts, causes deteriorated thermal conduction, possibly resulting in thermal destruction of IC.

## Pin Assignment

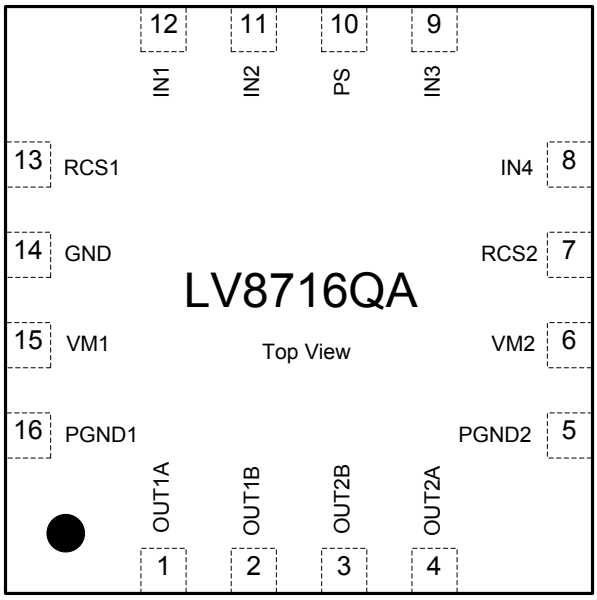


## Block Diagram

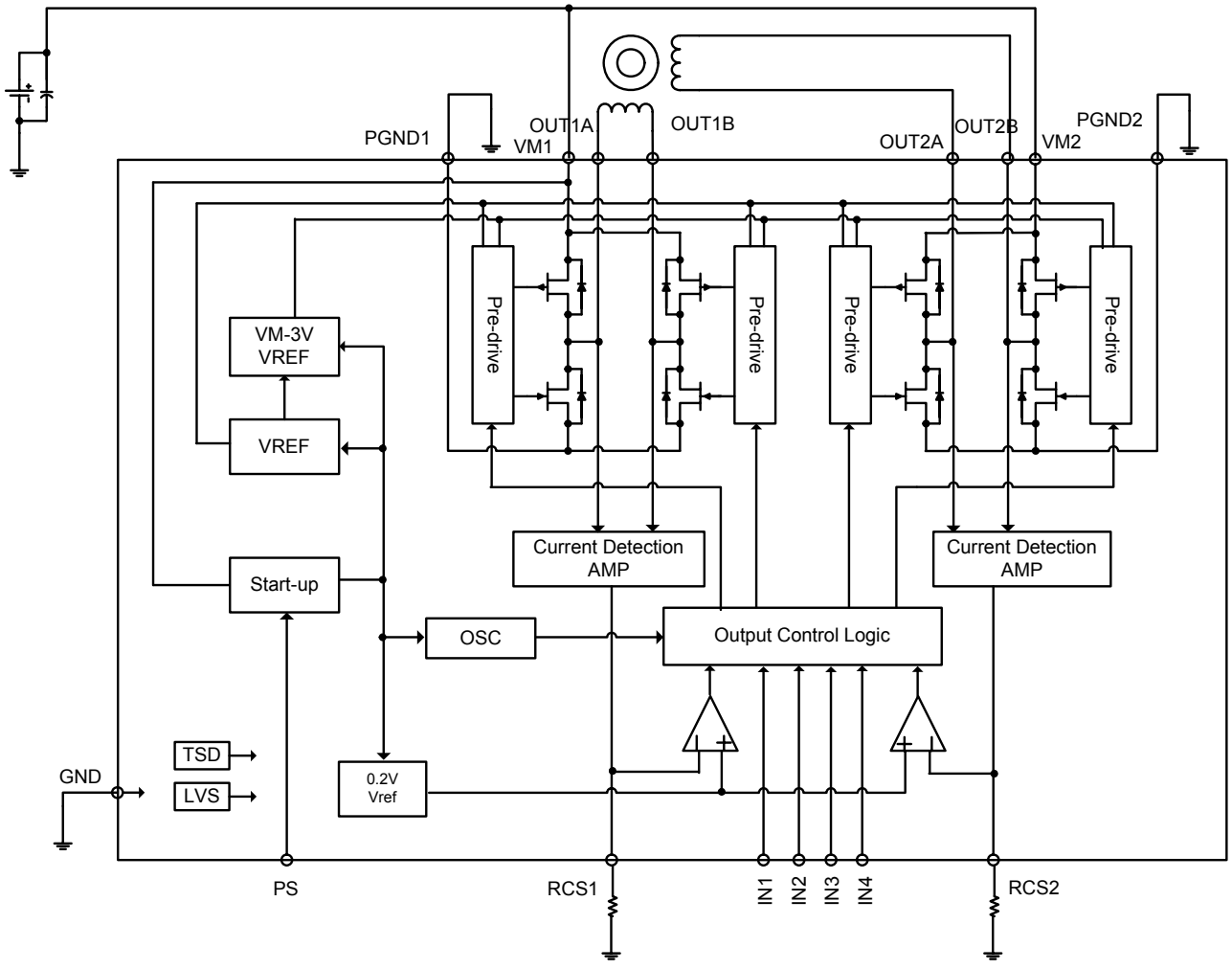

## Pin Functions

| Pin No. | Pin Name | Pin Function |
|---|---|---|
| 15 | VM1 | 1ch Motor power supply pin. |
| 6 | VM2 | 2ch Motor power supply pin. |
| 10 | PS | Power save signal input pin. |
| 12 | IN1 | 1ch control signal input pin. |
| 11 | IN2 | |
| 9 | IN3 | 2ch control signal input pin. |
| 8 | IN4 | |
| 13 | RCS1 | 1ch output current detecting resistor connection pin. |
| 7 | RCS2 | 2ch output current detecting resistor connection pin. |
| 14 | GND | GND |
| 16 | PGND1 | 1ch power GND. |
| 1 | OUT1A | 1ch OUTA output pin. |
| 2 | OUT1B | 1ch OUTB output pin. |
| 3 | OUT2B | 2ch OUTB output pin. |
| 4 | OUT2A | 2ch OUTA output pin. |
| 5 | PGND2 | 2ch power GND. |

## Equivalent Circuit

| Pin No. | Pin Name | Equivalent Circuit |
|---|---|---|
| 10 | PS | 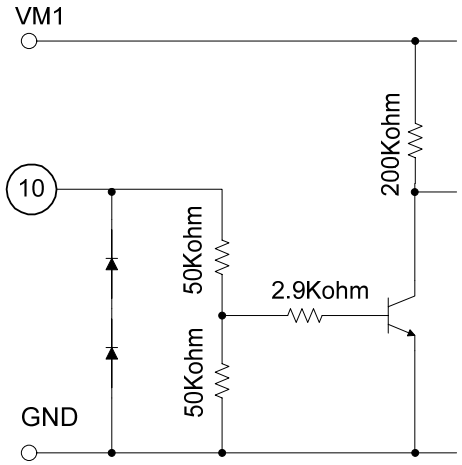 |
| 12<br>11<br>9<br>8 | IN1<br>IN2<br>IN3<br>IN4 | 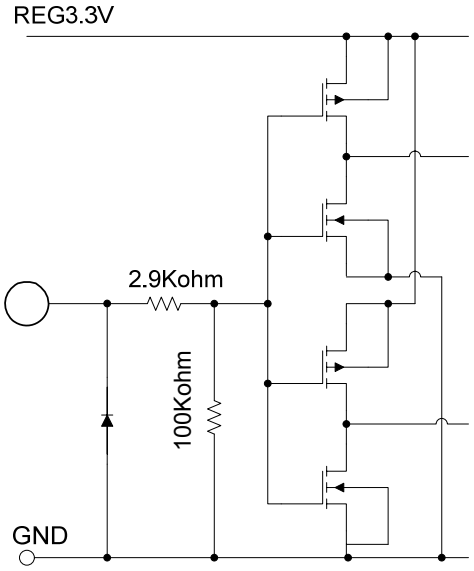 |

Continued on next page

Continued from preceding page.

| Pin No. | Pin Name | Equivalent Circuit |
|---|---|---|
| 15<br>16<br>1<br>2<br>6<br>5<br>4<br>3 | VM1<br>PGND1<br>OUT1A<br>OUT1B<br>VM2<br>PGND2<br>OUT2A<br>OUT2B | 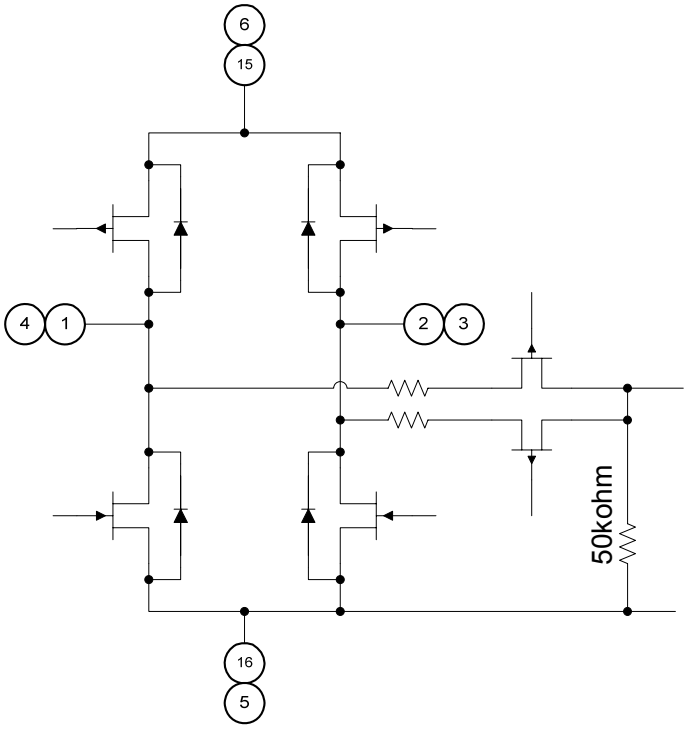 |
| 13<br>7 | RCS1<br>RCS2 | 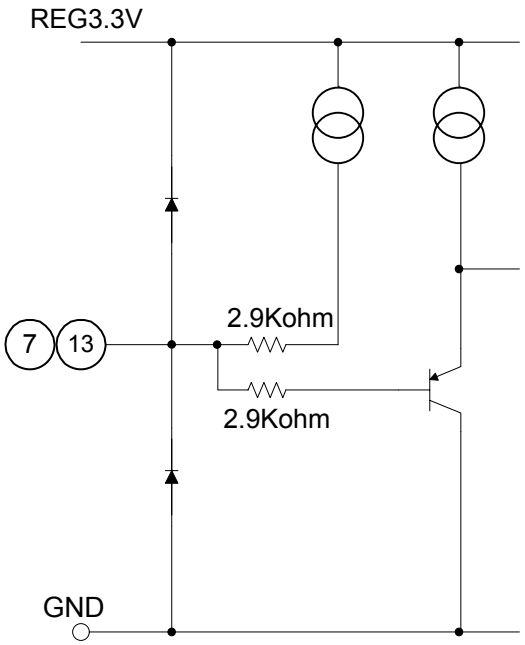 |

## Description of operation

1. Input pin function

The function to prevent that the current flows into a power supply from the each input pin is built in.
Therefore, current does not flow into power supply from the input pin when power supply is OFF.

2. Chip enables function

Standby mode/operating mode of the IC are switched by setting the PS pin. In the standby-state, the IC enters a power saving mode and all logic is reset. In the standby-state, internal regulator circuit is not operative.

| PS | Condition | Internal regulator |
|---|---|---|
| "L" or OPEN | Standby mode | Standby |
| "H" | Operating mode | Operation |

3. Output control signal logic

DC motor

| Input signal | | | | Output | | | | Mode |
|---|---|---|---|---|---|---|---|---|
| IN1 | IN2 | IN3 | IN4 | OUT1A | OUT1B | OUT2A | OUT2B | |
| L | L | - | - | OFF | OFF | - | - | Standby |
| H | L | - | - | H | L | - | - | CW (Forward) |
| L | H | - | - | L | H | - | - | CCW (Reverse) |
| H | H | - | - | L | L | - | - | Brake |
| - | - | L | L | - | - | OFF | OFF | Standby |
| - | - | H | L | - | - | H | L | CW (Forward) |
| - | - | L | H | - | - | L | H | CCW (Reverse) |
| - | - | H | H | - | - | L | L | Brake |

Stepper motor

| Input signal | | | | Output | | | | Function | |
|---|---|---|---|---|---|---|---|---|---|
| IN1 | IN2 | IN3 | IN4 | OUT1A | OUT1B | OUT2A | OUT2B | Full step | Half step |
| L | L | L | L | Off | Off | Off | Off | Standby | Standby |
| H | L | H | L | High | Low | High | Low | Step 1 | Step 1 |
| L | L | H | L | Off | Off | High | Low | – | Step 2 |
| L | H | H | L | Low | High | High | Low | Step 2 | Step 3 |
| L | H | L | L | Low | High | Off | Off | – | Step 4 |
| L | H | L | H | Low | High | Low | High | Step 3 | Step 5 |
| L | L | L | H | Off | Off | Low | High | – | Step 6 |
| H | L | L | H | High | Low | Low | High | Step 4 | Step 7 |
| H | L | L | L | High | Low | Off | Off | – | Step 8 |

4. Typical current waveform in each excitation mode.

Full step (CW mode)

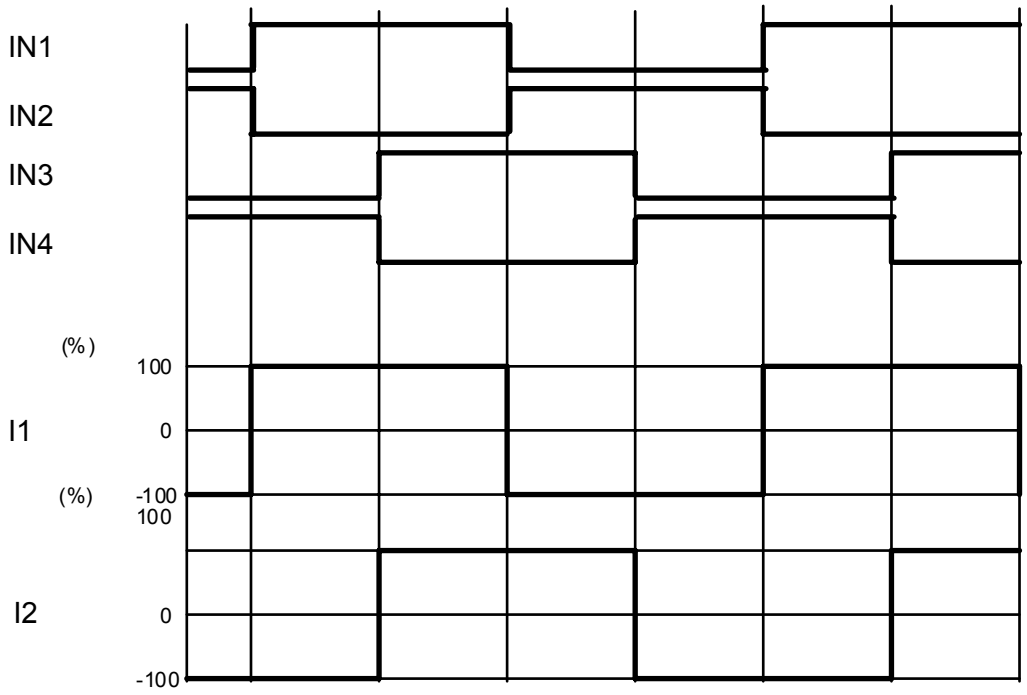


Half step full torque (CW mode)

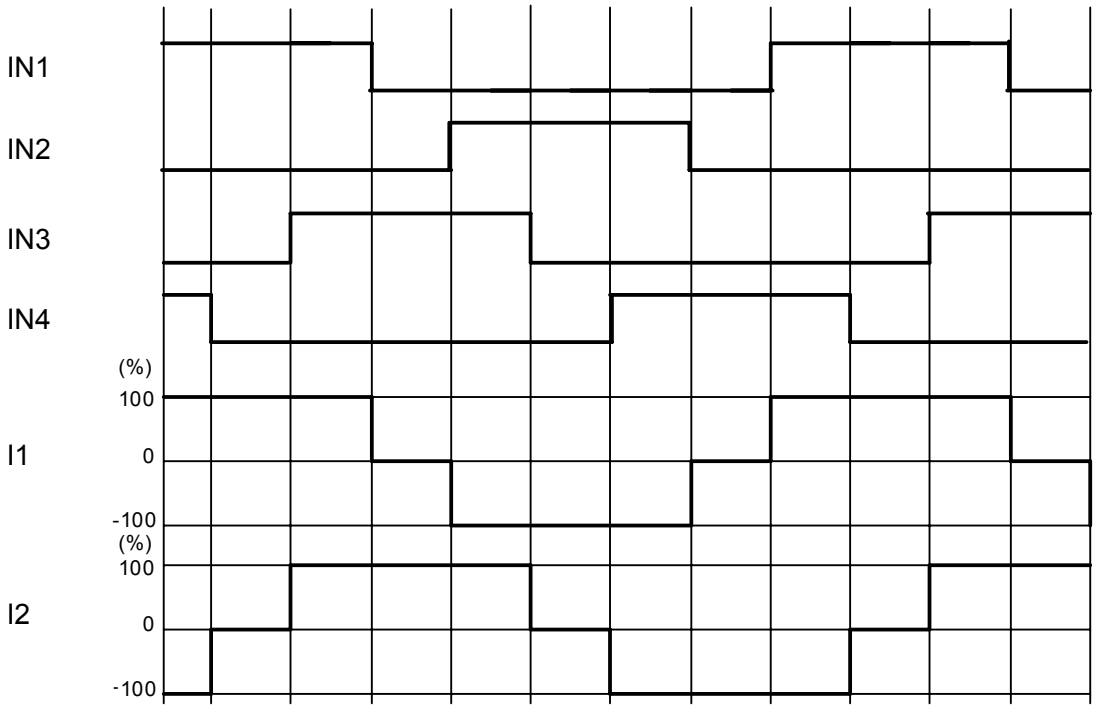

5. PWM constant-current control

LV8716QA performs constant current control of coil current by PWM chopping of the output pin, as opposed to the output detection current set up by connecting external resistance to RCS pin.

(Constant-current control time chart)

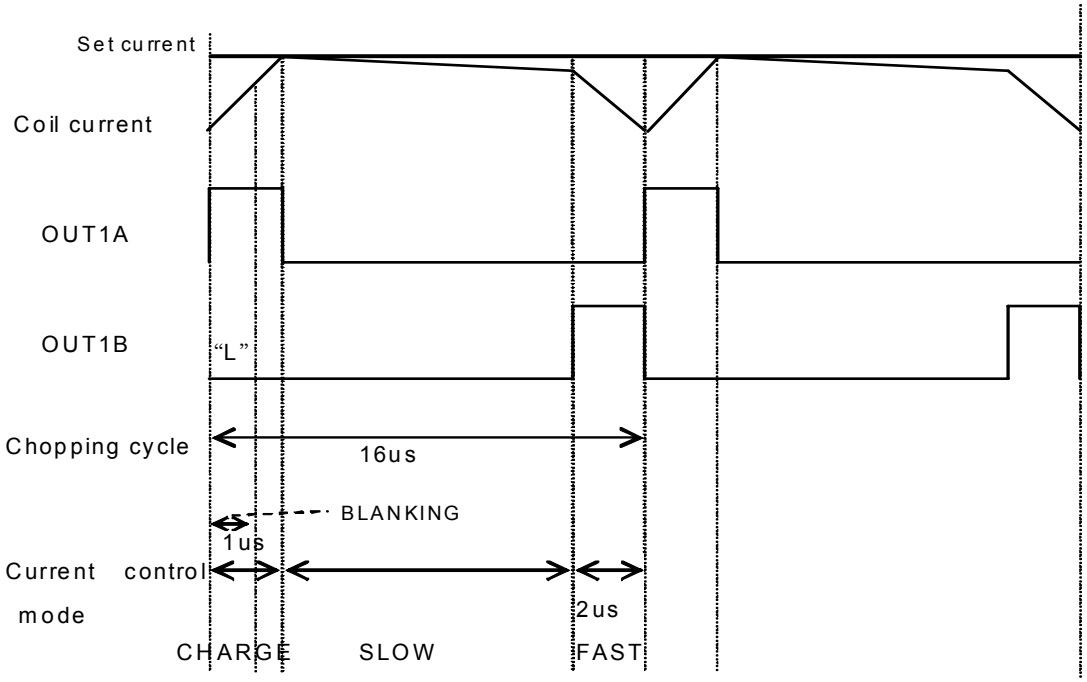


Detection current setting method

For setting the output current are as follows:
IC internal reference voltage (Vref = 0.2V), between RCS pin and GND pin connecting resistance is RCS.

$$Iout = 0.2V/RCS \times 4000$$

e.g. RCS = 2kΩ

$$Iout = 0.2V/2k\Omega \times 4000 = 0.4A$$

6. Application Circuit Example

6-1) Stepper motor driver circuit

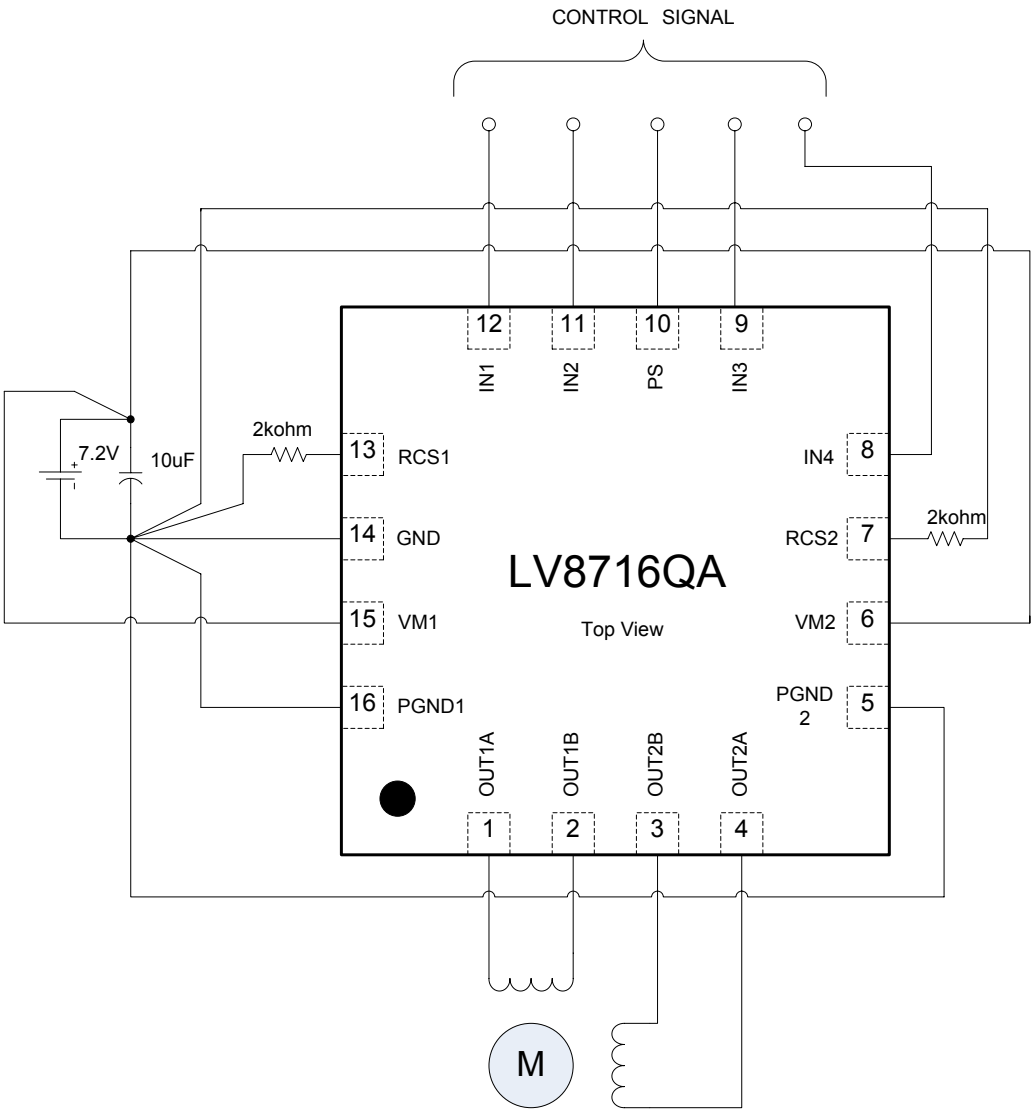


The formulae for setting the PWM constant current above is as follows :

Iout = 0.2/2kΩ×4000 = 400mA (RCS=2kΩ)

6-2) High current DC motor driver circuit

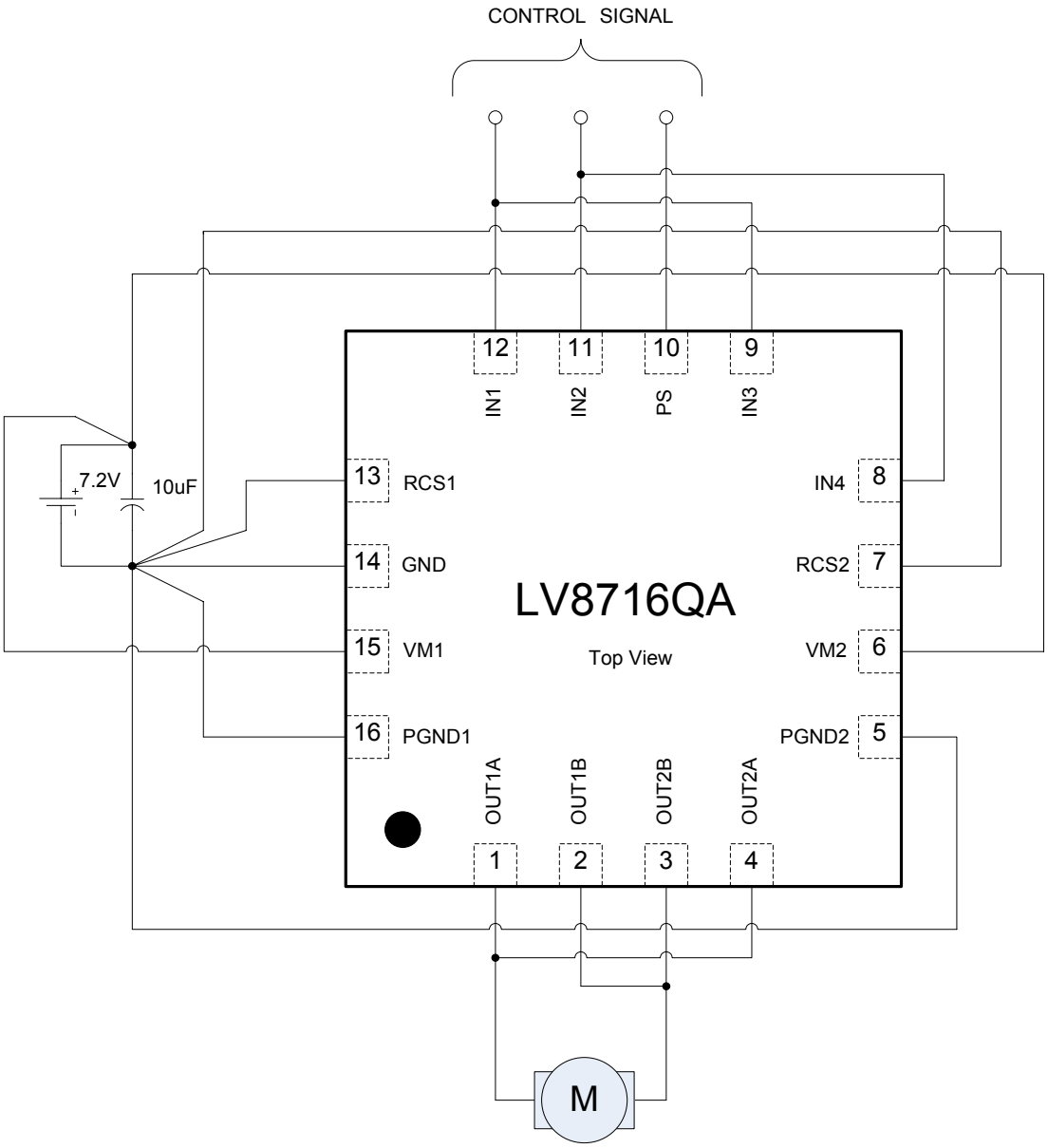


LV8716QA can drive a large current DC motor by connecting two H-bridges to parallel.

Iomax = 2A
Iomax = 3A (tw ≤ 10ms)

When it connects H-bridge to parallel,
LV8716QA cannot use the internal PWM constant current control function.
Please connect the RCS pin to GND.

6-3) 2ch DC motor driver circuit

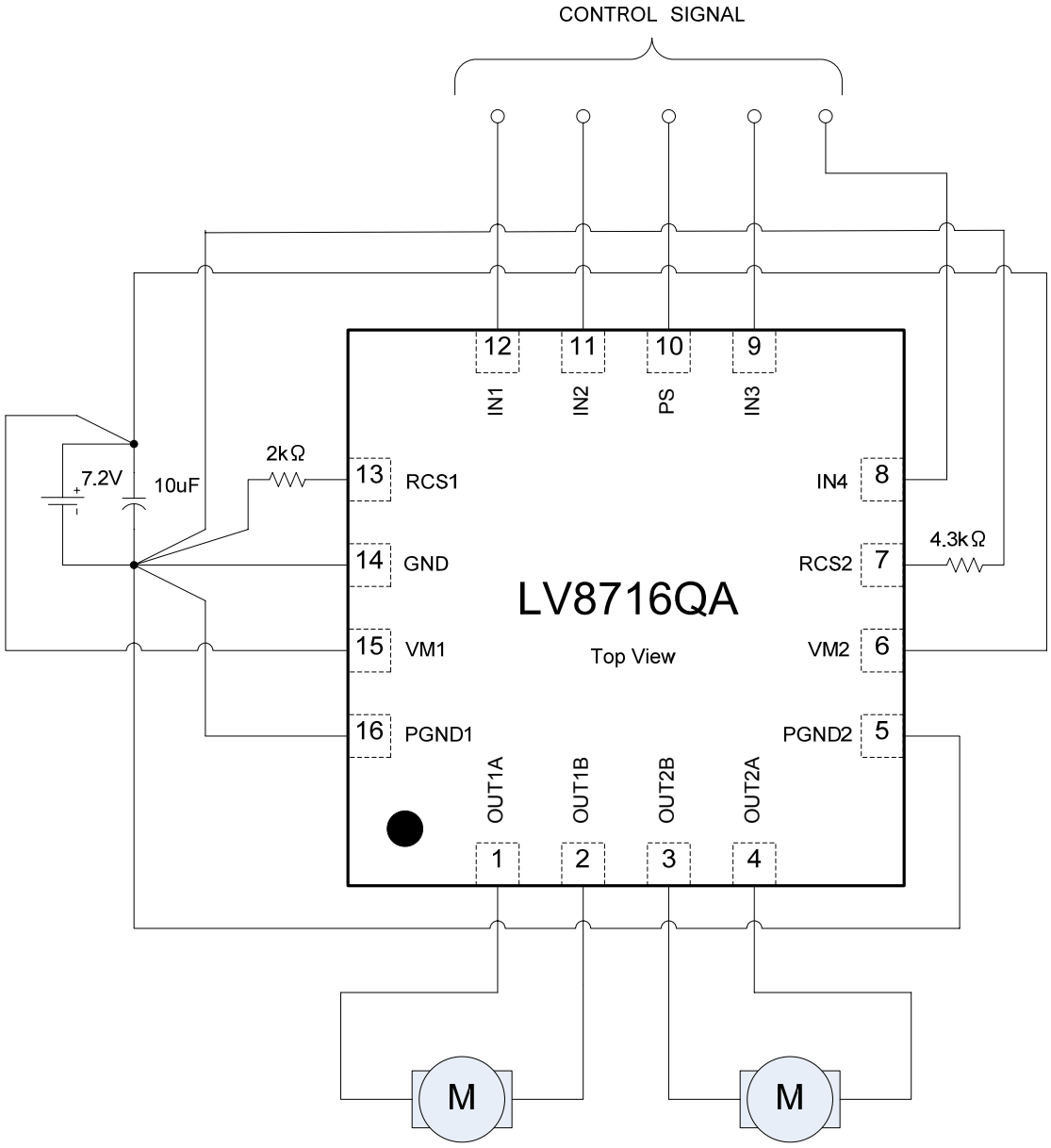


The formulae for setting the PWM constant current above is as follows :

When RCS1 = 2kΩ, RCS2 = 4.3kΩ

Iout = 0.2/2kΩ×4000 = 400mA
Iout = 0.2/4.3kΩ×4000 = 186mA

## ORDERING INFORMATION

| Device | Package | Shipping (Qty / Packing) |
|---|---|---|
| LV8716QA-MH | QFN16 3x3, 0.5P<br>(Pb-Free / Halogen Free) | 3000 / Tape & Reel |

ON Semiconductor and the ON logo are registered trademarks of Semiconductor Components Industries, LLC (SCILLC) or its subsidiaries in the United States and/or other countries. SCILLC owns the rights to a number of patents, trademarks, copyrights, trade secrets, and other intellectual property. A listing of SCILLC's product/patent coverage may be accessed at www.onsemi.com/site/pdf/Patent-Marking.pdf. SCILLC reserves the right to make changes without further notice to any products herein. SCILLC makes no warranty, representation or guarantee regarding the suitability of its products for any particular purpose, nor does SCILLC assume any liability arising out of the application or use of any product or circuit, and specifically disclaims any and all liability, including without limitation special, consequential or incidental damages. "Typical" parameters which may be provided in SCILLC data sheets and/or specifications can and do vary in different applications and actual performance may vary over time. All operating parameters, including "Typicals" must be validated for each customer application by customer's technical experts. SCILLC does not convey any license under its patent rights nor the rights of others. SCILLC products are not designed, intended, or authorized for use as components in systems intended for surgical implant into the body, or other applications intended to support or sustain life, or for any other application in which the failure of the SCILLC product could create a situation where personal injury or death may occur. Should Buyer purchase or use SCILLC products for any such unintended or unauthorized application, Buyer shall indemnify and hold SCILLC and its officers, employees, subsidiaries, affiliates, and distributors harmless against all claims, costs, damages, and expenses, and reasonable attorney fees arising out of, directly or indirectly, any claim of personal injury or death associated with such unintended or unauthorized use, even if such claim alleges that SCILLC was negligent regarding the design or manufacture of the part. SCILLC is an Equal Opportunity/Affirmative Action Employer. This literature is subject to all applicable copyright laws and is not for resale in any manner.