ON Semiconductor®

LV8414CSGEVK V1.0 Evaluation Kit User Guide

NOTICE TO CUSTOMERS

The LV8414CS Evaluation Kit is intended to be used for ENGINEERING DEVELOPMENT, DEMONSTRATION OR EVALUATION PURPOSES ONLY and is not considered by ON SEMICONDUCTOR to be a finished end product fit for general customer use. Information contained in this document regarding the device application and the like is provided only for your convenience.

ON SEMICONDUCTOR MAKES NO REPRESENTATIONS OR WARRANTIES OF ANY KIND WHETHER EXPRESS OR IMPLIED, WRITTEN OR ORAL, STATUTORY OR OTHERWISE, RELATED TO THE INFORMATION, INCLUDING BUT NOT LIMITED TO ITS CONDITION, QUALITY, PERFORMANCE, MERCHANTABILITY OR FITNESS FOR PURPOSE.

The user indemnifies ON SEMICONDUCTOR fully in respect of any claim made against ON SEMICONDUCTOR arising from the use of the LV8414CS Evaluation Kit V1.0.

WARNING

The LV8414CS Evaluation Kit is referenced to the DC supply ground and is not earthed. Hence, it carries a risk of electric shock. Caution is required when the power is applied to the kit. Only qualified technicians and/or engineers should handle the kit. When the power is applied to the kit, it is absolutely must that users only probe provided test points and do not touch any other point on the kit.

1. Introduction

The LV8414CSGEVK evaluation board (EVB) provides a quick and easy platform to evaluate the LV8414CS functionalities. Users need to connect an external power supply (2.5V – 5.5V) for evaluation. The kit consists of:

1. LV8414CS Evaluation Board :
   LV8414CSGEVK with on-board microcontroller circuit (Daughter board)
2. USB cable
3. Stepper motor (x2) *1

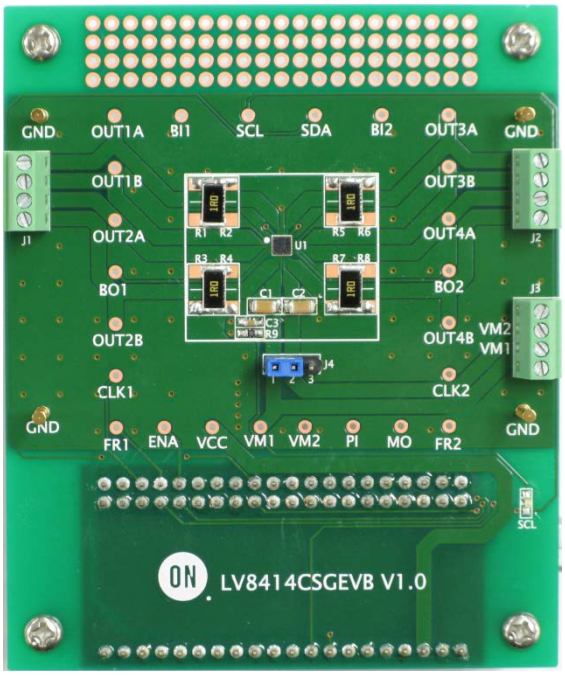

LV8414CSEVK top view

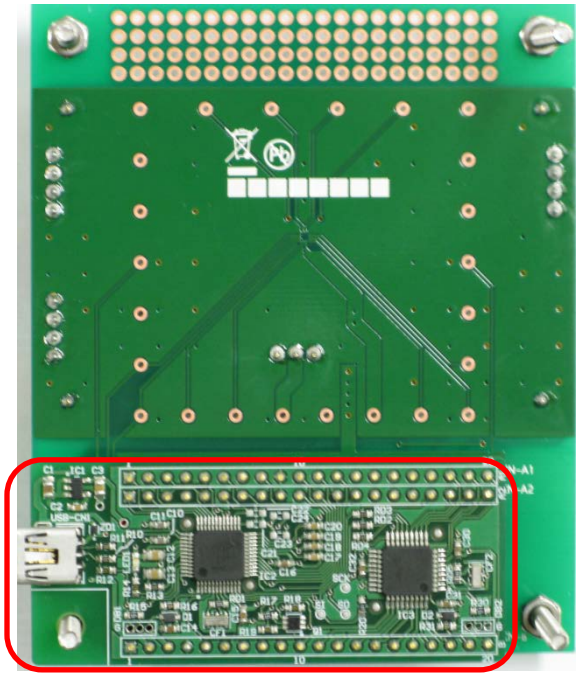

Daughter board

LV8414CSAGEVK bottom view



USB cable



Stepper motor x2

MSCA020A55*[1]

(Winding Res: 15±1.5Ω)

Nidec Sankyo Corporation

Figure 1: LV8414CS Evaluation Kit

*1: In case of using the stepper motor “MSCA020A55”.

When you continuously energized the 200mA at 25°C ambient temperature, temperature of the motor windings will be 25 + 84.4 = 109.4°C. Because the guaranteed temperature of the motor windings is 115°C, upper limit of the allowable current is 200mA.

In case of the other motor, please refer to the specification of it.

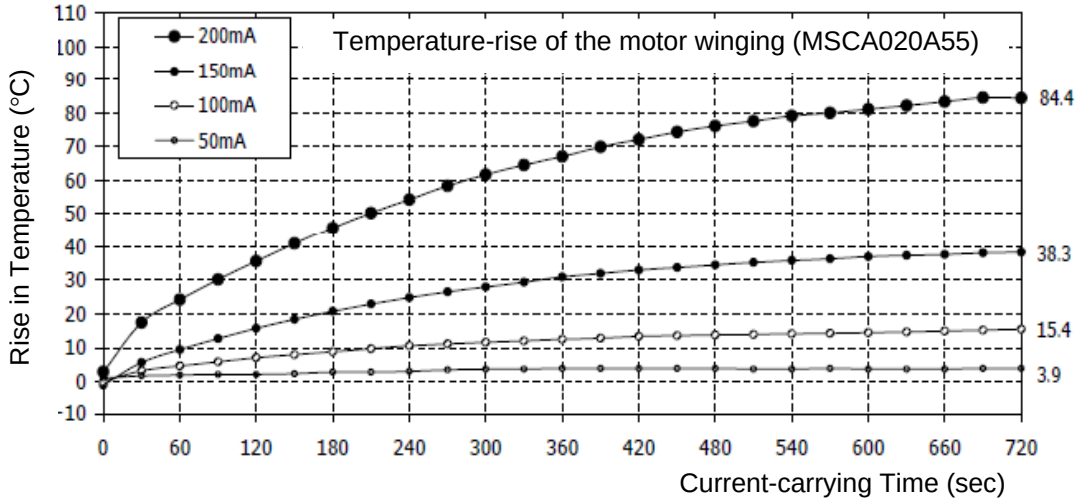

Figure 2. Temperature-rise characteristic of the motor winding

2. Features

The kit provides an integrated development platform to drive a bipolar stepper motor. Following are key features of the kit.

LV8414CS Evaluation Board: LV8414CSGEVK

- Daughter board for communication with the PC based Graphical User Interface.

Graphical User Interface (GUI)

- Enables users to set/modify LV8414CS parameters in real-time

3. LV8414CS Evaluation Board (EVB) Overview

The EVB consists of three connectors to connect two motors and a power supply, and a daughter board to control signal. (shown in Figure 3).

Motor winding connectors

The LV8414CS can drive one or two stepper motors. The following table shows the combination of the outputs and motors/motor-channels.

Output A	Output B	Channel	Motor
OUT1A	OUT1B	1	1
OUT2A	OUT2B	2	
OUT3A	OUT3B	3	2
OUT4A	OUT4B	4	

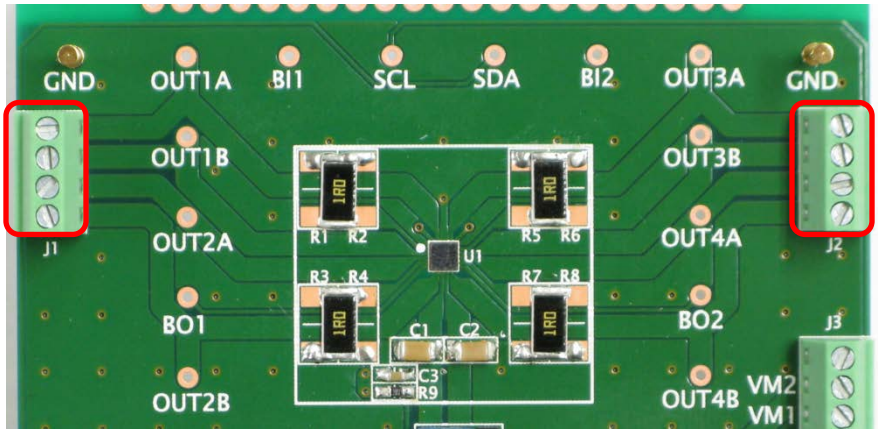

Figure 3. Motor winding Connectors

DC power supply connector

The LV8414CS requires external power supply for its operation. To drive two stepper motors, power must be supplied to both VM1 and VM2.

Pin Name	Min. [V]	Max. [V]
VM1, VM2	2.5	5.5

And, the power supply pins are separated as shown in the following table.

Power supply pin	Outputs
VM1	OUT1A, OUT1B, OUT2A, OUT2B
VM2	OUT3A, OUT3B, OUT4A, OUT4B

- To supply the same voltage to VM1 and VM2, a single power supply must be connected to either VM1 or VM2 pin of the connector J3, while the pin 1 and pin 2 of the jumper J4 are shorted. (shown in Figure 4).

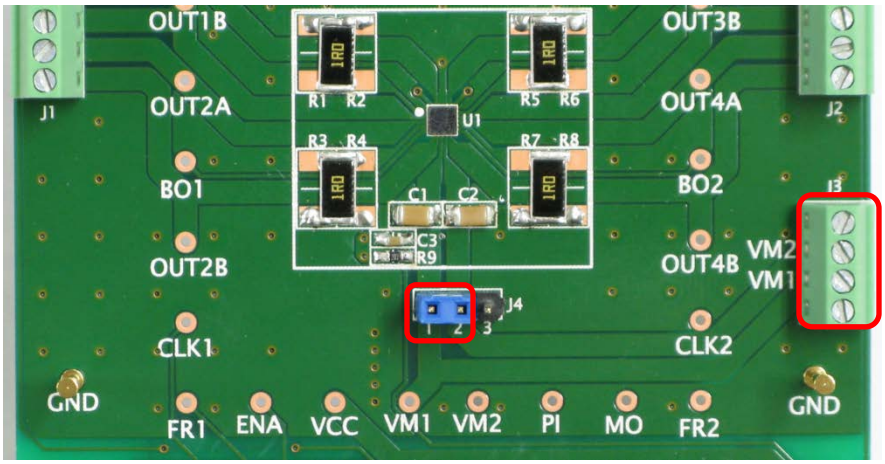

Figure 4. Power Supply Connectors and Jumper J4

USB connector on the Daughter board

The regulator on the Daughter board generates VCC=3.3V output from USB power. The logic block in LV8414CS and Daughter board are designed to operate at VCC.

- When the external microcontroller is used, remove the Daughter board, and apply a power supply same as the external microcontroller to VCC.

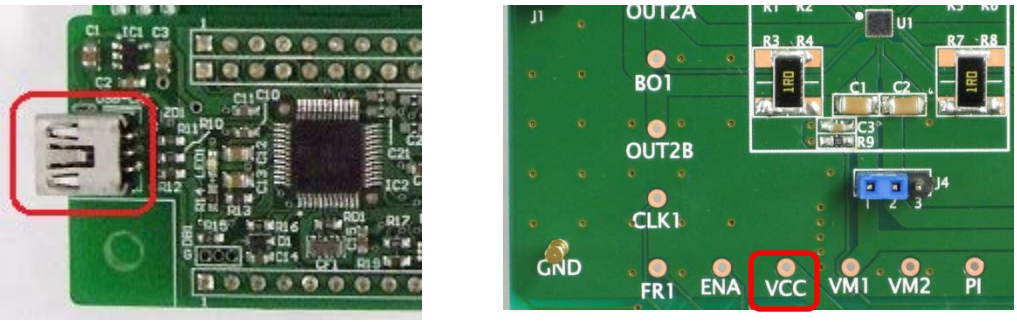

Figure 5: USB connector and VCC pin

R1-8: RF Resistor

The output current is determined by the RF Resistor and the current reference voltage based on the following equation.

$$I_{OUT} = \frac{V_{REF}}{R_{RF}}$$

Where,

I_{OUT} : Motor current
V_{REF} : Current reference voltage
R_{RF}: RF Resistor (Default setting value is 1Ω.)

-V_{REF} is set by the register with GUI. The GUI operation will be described below.

4. Graphical User Interface (GUI) Installation

An easy-to-use GUI is provided (*free of cost*) for real-time LV8414CS based solution development. Perform the following steps to get started with the GUI. This GUI will work with the Windows 7 (32bit, 64bit) and Windows 8 (32bit).

(1) Unpack the zip file **"M-DrAGON_version1134.zip"**, and confirm files as shown in below. **"M-DrAGON_version1134.exe"**, **"M-DrAGON_driver.inf"**, and **"LV8414CSGEVK_USER_GUIDE-D.rev0.pdf"**.
(2) Connect the LV8414CSGEVK to the PC using the USB cable.

Steps (3) to (11) show the USB driver installation procedure that refers to an expression on Windows 8 (32bit). This layout and procedure may vary with other operating system version. It is required only for the first time when the LV8414CSGEVK is connected to the USB port.

(3) The Windows OS will try to install driver on its own. Wait for a few minutes. Installation will fail.
(4) Click on the Start Menu, and open the Control Panel.
(5) Open the Device Manager.
(6) Either under "Ports (COM & LPT)" or "Other Devices", you should see an open port named "USB-MiconI/ O Controller".

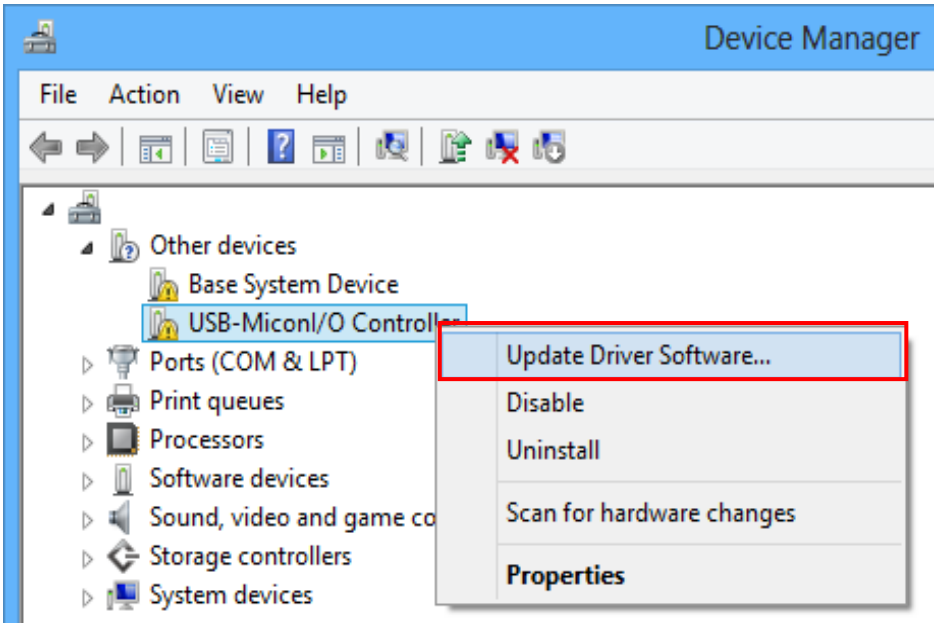

Figure 6: Device Manager 1

(7) Right click on the “USB-MiconI/ O Controller” port and choose the “Update Driver Software” option.

- If the update driver software option is not available, then the Windows OS is still trying to install the driver on its own. Wait till the OS finishes self-try.

(8) Next, choose the "Browse my computer for Driver software" option.
(9) Finally, navigate to and select the driver file named **“M-DrAGON_driver.inf”**, located in the “M-DrAGON_driver” folder. And click “Next”.
(10) Windows will finish up the driver installation from there.

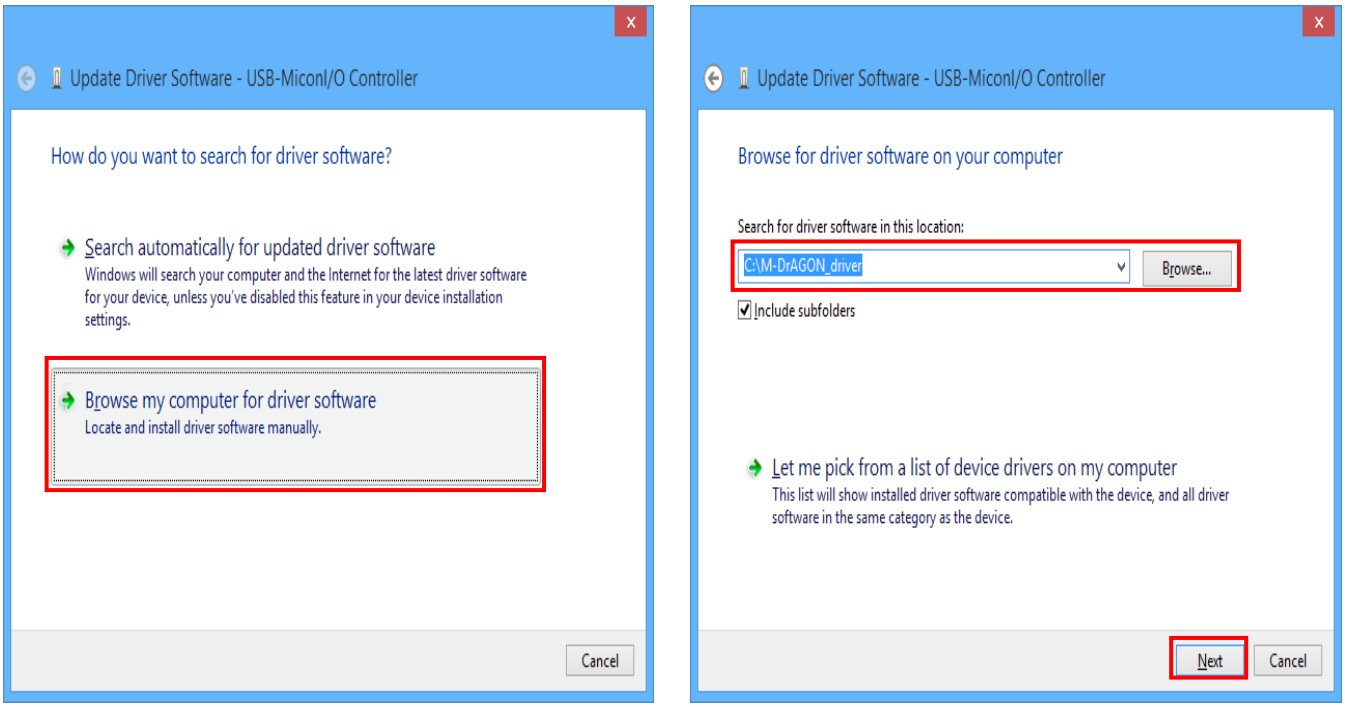

Figure 7: USB-MiconI/ O Controller 1

Note: When “Windows security” is shown, please select “Install this driver software anyway”.

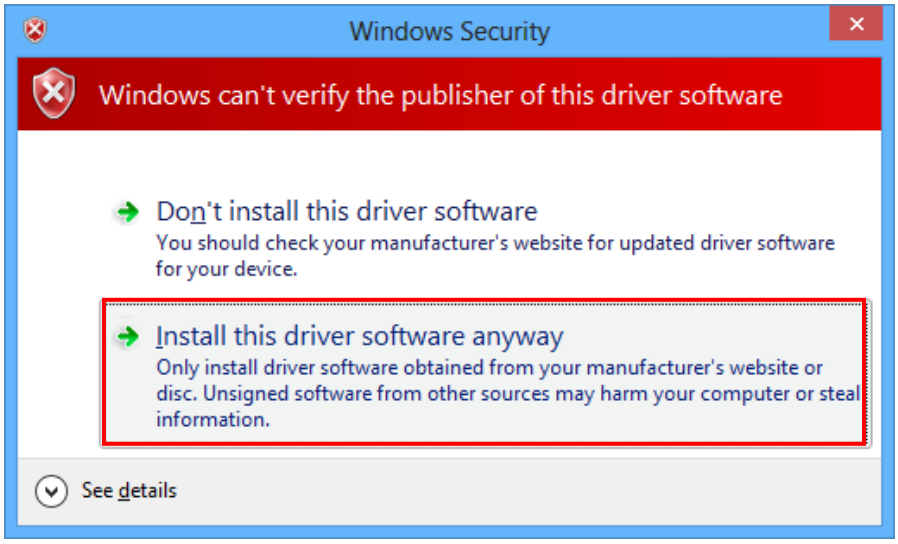

Figure 8: Windows Security

(11) When the installation is successful, the final window is shown. And the recognized M-DrAGON I/O Controller port with the port number is shown in the Device Manager.

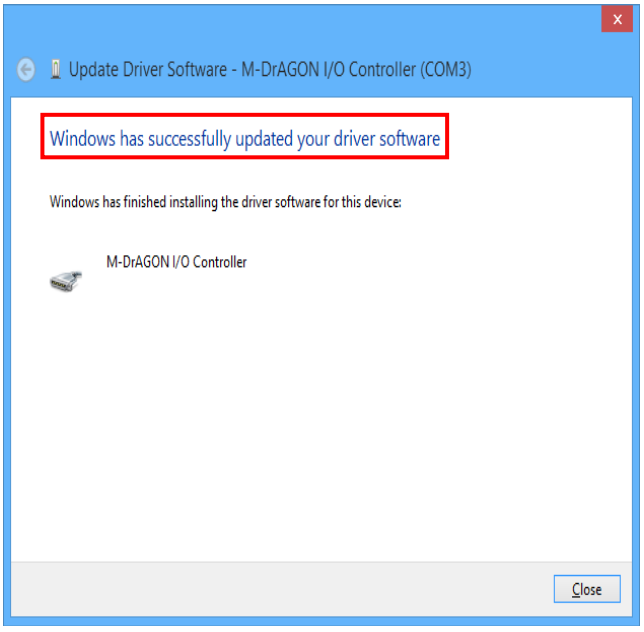

Figure 9: USB-MiconI/ O Controller 2

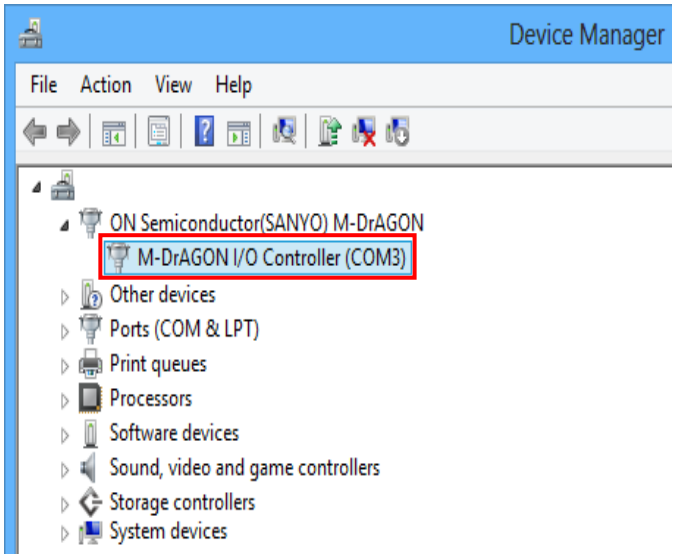

Figure 10: Device Manager 2

(12) Start “M-DrAGON_version1134.exe”. Select “Lens” in Motor type. Since the Driver type is displayed device that can drive the stepper motor by selecting “Lens”, select “LV8414CS” from the drop-down list of Driver type, and then click “OK”.

(Start up GUI)

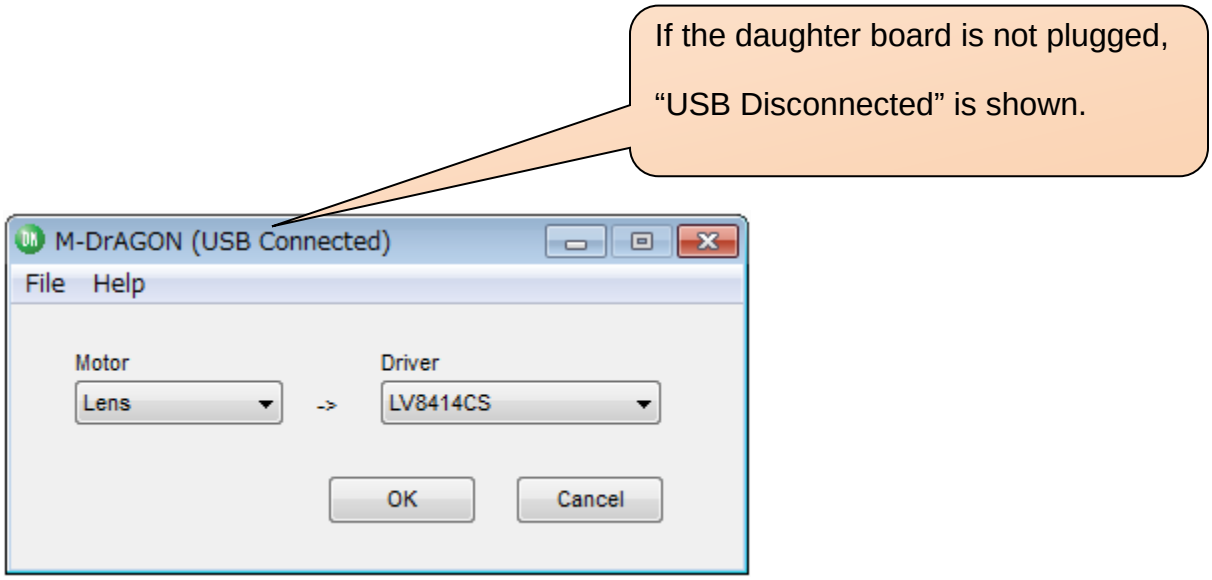

Figure 11: Motor type and Driver setting window

1. Select “Lens” in “Motor” pull-down list.
2. Select “LV8414CS” in the “Driver” pull down list.

-When the selected “Driver” is not displayed, please check whether it is suitable for that kind of evaluation board.

3. Click “OK” button.

4. The following windows should appear.

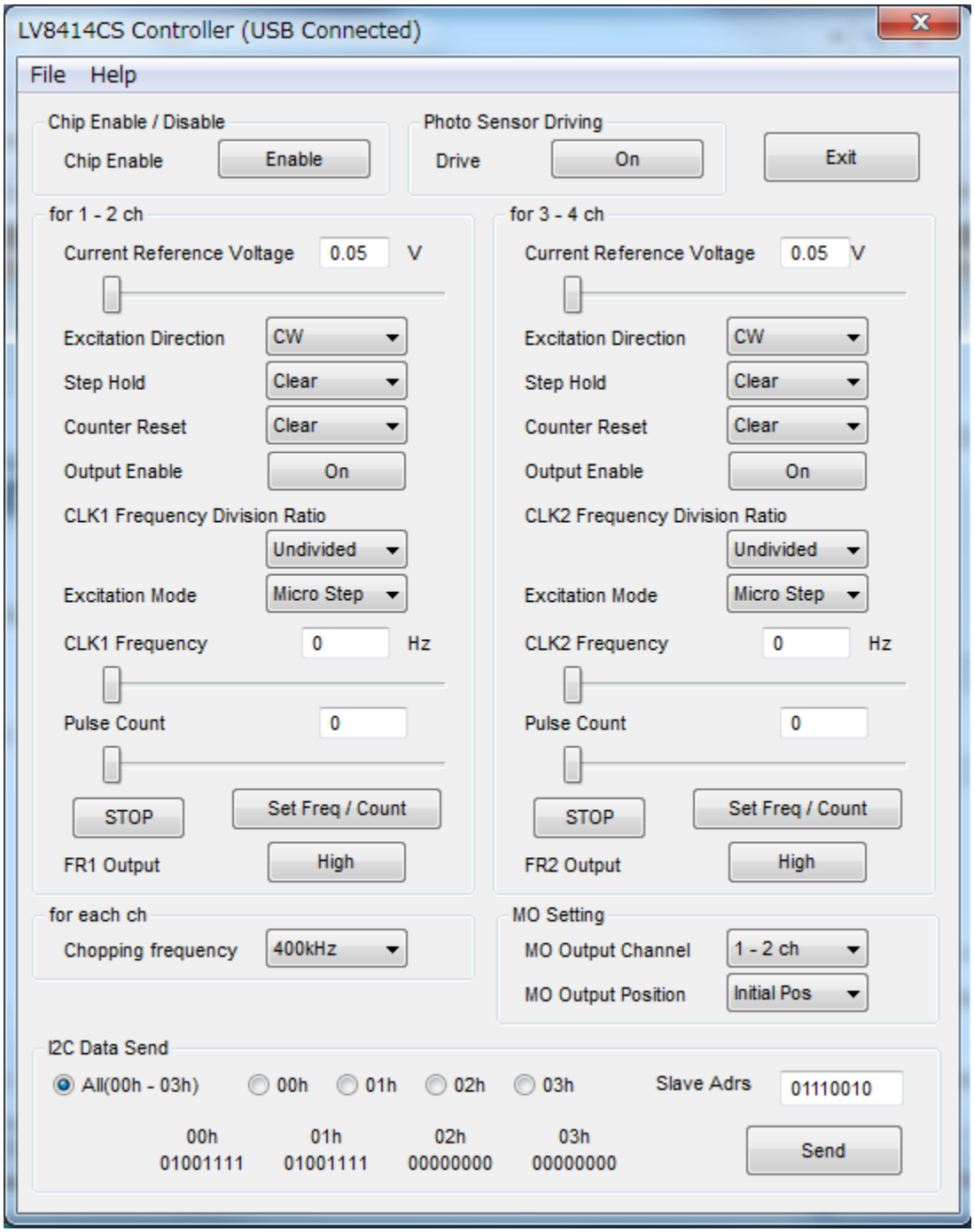

Figure 12: Controller window

5. Usage of the GUI:

(1) GUI field description of controller window 1-1

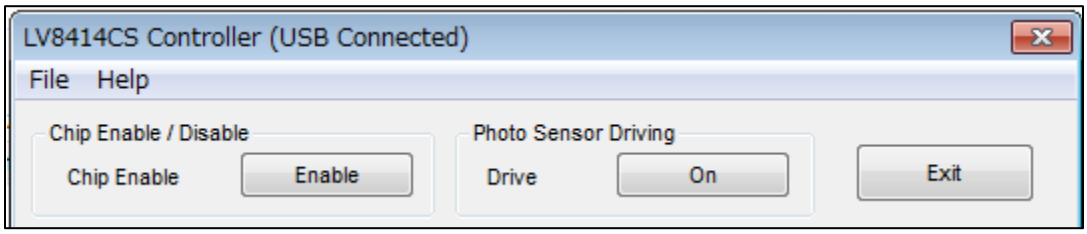

Figure 13: GUI field description of controller window 1-1

- **Chip Enable / Disable**
  "Enable": IC will be enabled state. (The indicator changed to "Disable".)
  "Disable": IC will be disabled state. (The indicator changed to "Enable".)

- **Photo Sensor Driving**
  "ON": Activate the photo diodeshunt driver (PI pin).
  (The indicator changed to "OFF".)
  "OFF": Deactivate it. The indicator changed to "ON".

- **Exit**
  "Exit": End the program.

(2) GUI field description of controller window 1-2

The register setting group for channel 1 and 2:
(The description for channel 3 and 4 is the same.)

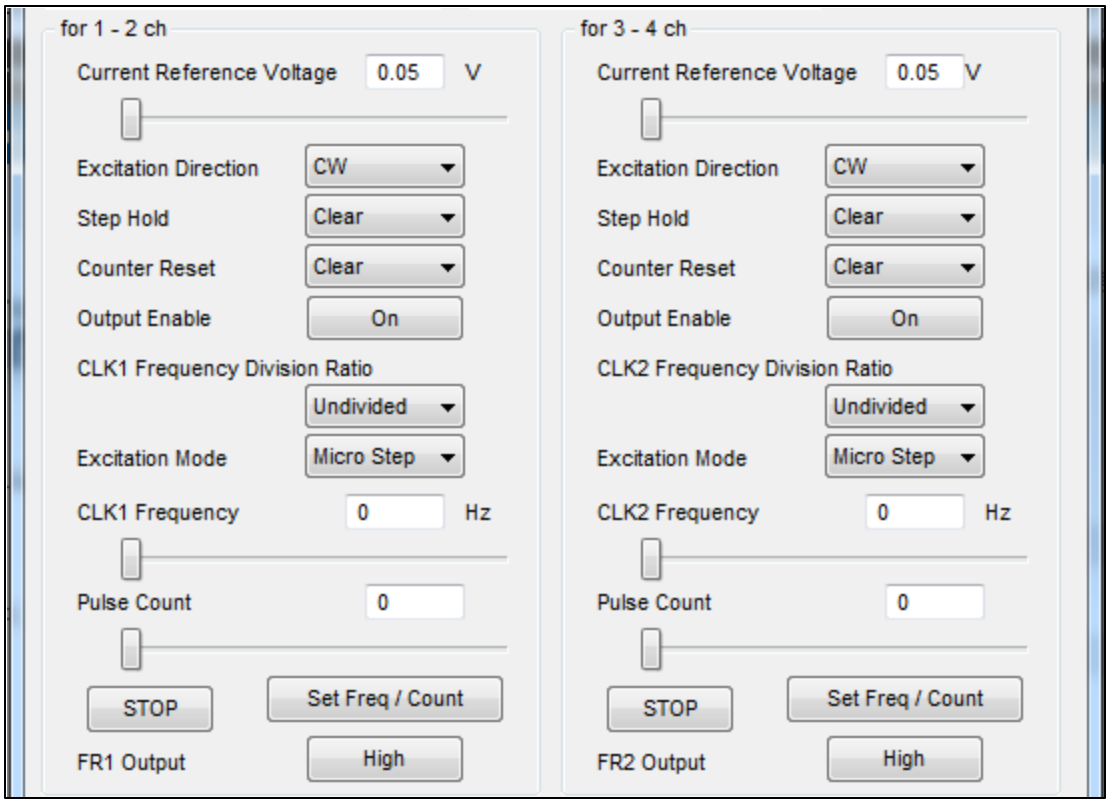

Figure 14: GUI field description of controller window 1-2

- **Current Reference Voltage**
  The current reference voltage can be selected from 0.05 to 0.20 (V) by slider. The output current is determined by the RF Resistor and the current reference voltage based on the following equation.

$$I_{OUT} = \frac{V_{REF}}{R_{RF}}$$

Where,
I_{OUT} : Motor current
V_{REF} : Current reference voltage
R_{RF}: RF Resistor (Default setting value is 1Ω.)

- **Excitation Direction / FR1 Output**:
  "CW" : clockwise rotation;
  "CCW": counterclockwise rotation.
  This register setting is valid when FR1 is set "Low".
  (The indicator changed to "High".)
  This register setting is ignored when FR1 is set "High",
  and the counterclockwise is selected.

- **Step Hold**:
  "Clear": the step position is advanced by the clock signal.
  "Hold": hold the step position, the clock signal is ignored.

- **Counter reset**:
  "Clear": not reset
  "Reset": make the output to go the initial state.

- **Output Enable**:
  "Off" : the output is disabled . The output gets "high impedance" state.
  "On" : the output is enabled when the chip enable is set "Enable".

- **CLK1 Frequency Division Ratio**:
  The CLK1 frequency division ratio can be selected from "Undivide", "1/2", "1/4" and "1/8" by drop-down list.

- **Excitation Mode**:
  The excitation mode can be selected from "Micro step (256 division)", "Half Step", "Half (full torque), "Full Step" by drop-down list.

- **CLK1 Frequency**:
  The CLK1 frequency can be selected between "100Hz and 100kHz by slider.

- **Pulse Count**
  The number of clock pulses can be selected from "0~32588" and "cont." by slider. "cont." means a continuance pulse.

- **Set Freq / count, STOP**
  When "Set Freq / count" button is clicked, the "CLK1" signals is outputted. Then the motor starts rotating. When "STOP" button is clicked, the "CLK1" signals stop, and the motor stop rotating.

(3) GUI field description of controller window 1-3 (The setting group of utility)

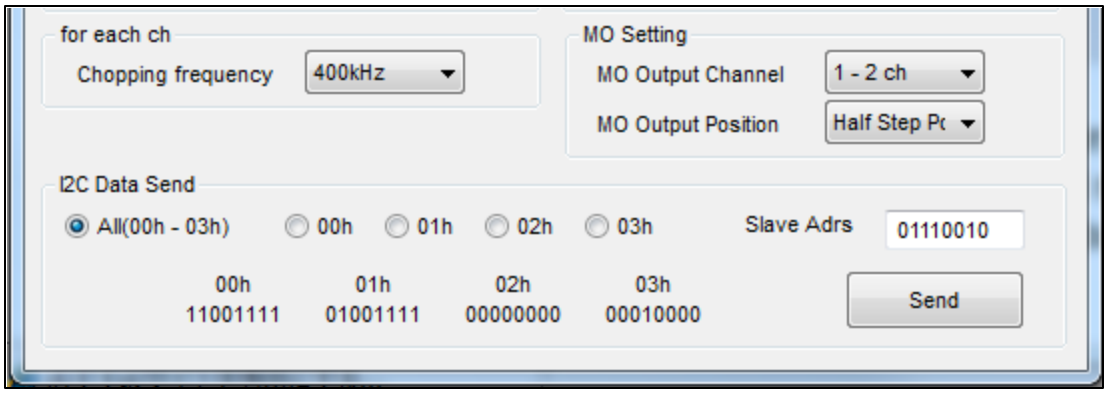

Figure 15: GUI field description of controller window 1-3

- **Chopping frequency**
  The CLK1 frequency division ratio can be selected from “200”, “300”, “400” and “600”(kHz) by drop-down list.

- **MO Output Channel**
  The stepping position monitor output pin MO is provided. Either “1/2ch” or “3/4ch” can be selected for it.

- **MO Output Position**
  “initial Pos”: The MO output gets LOW at the initial position
  “Half Step Pos”: The MO output gets LOW at the initial position and 1-2 phase position

- **I2C Data Send**
  The I2C data to be send can be selected from “All (00h-03h)”, “01h”, “02h”, and “03h” by radio buttons. When "Send" button is clicked, the I2C data is sent.
  * Slave Adrs "01110010" is fixed for LV8414CS.

(4) GUI field description of controller window 1-4

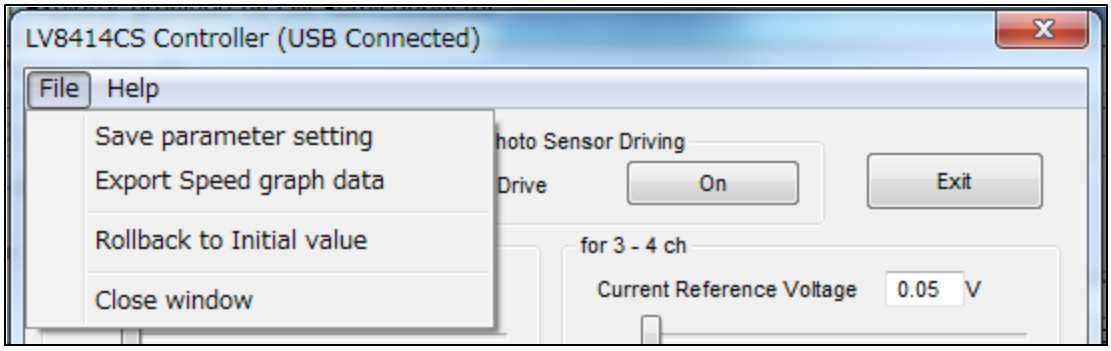

GUI field description of controller window

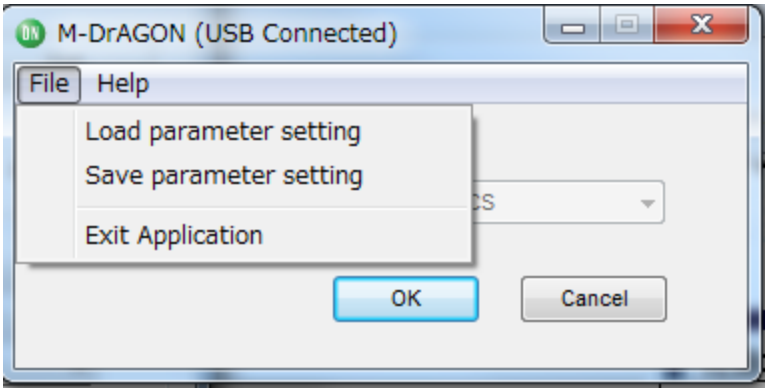

Motor and Driver setting window

Figure 16: GUI field description of controller window 1-4

Save parameter setting

Save the parameter setting data of GUI. Select “File” in the menu bar at the top of GUI Controller window or Motor and Driver setting window, then select “Save parameter setting”.

Export Speed graph data This function is not available.

Rollback to Initial value

When “Rollback to Initial value” is clicked, all parameters of the Controller window is returned to an initial value.

Load parameter setting

Load the file which is saved the setting data of GUI with “Save parameter setting”. Select “File” in the menu bar at the top of Motor and Driver setting window, then select “Load parameter setting”.

6. Operation

Following steps describe a typical operating procedure. It is assumed that the device driver has been already installed.

Step 1. Connect LV8414CSGEVK to the PC using the USB cable.
Step 2. Connect stepper motor and connect power supply (2.5V ~ 5.5V).

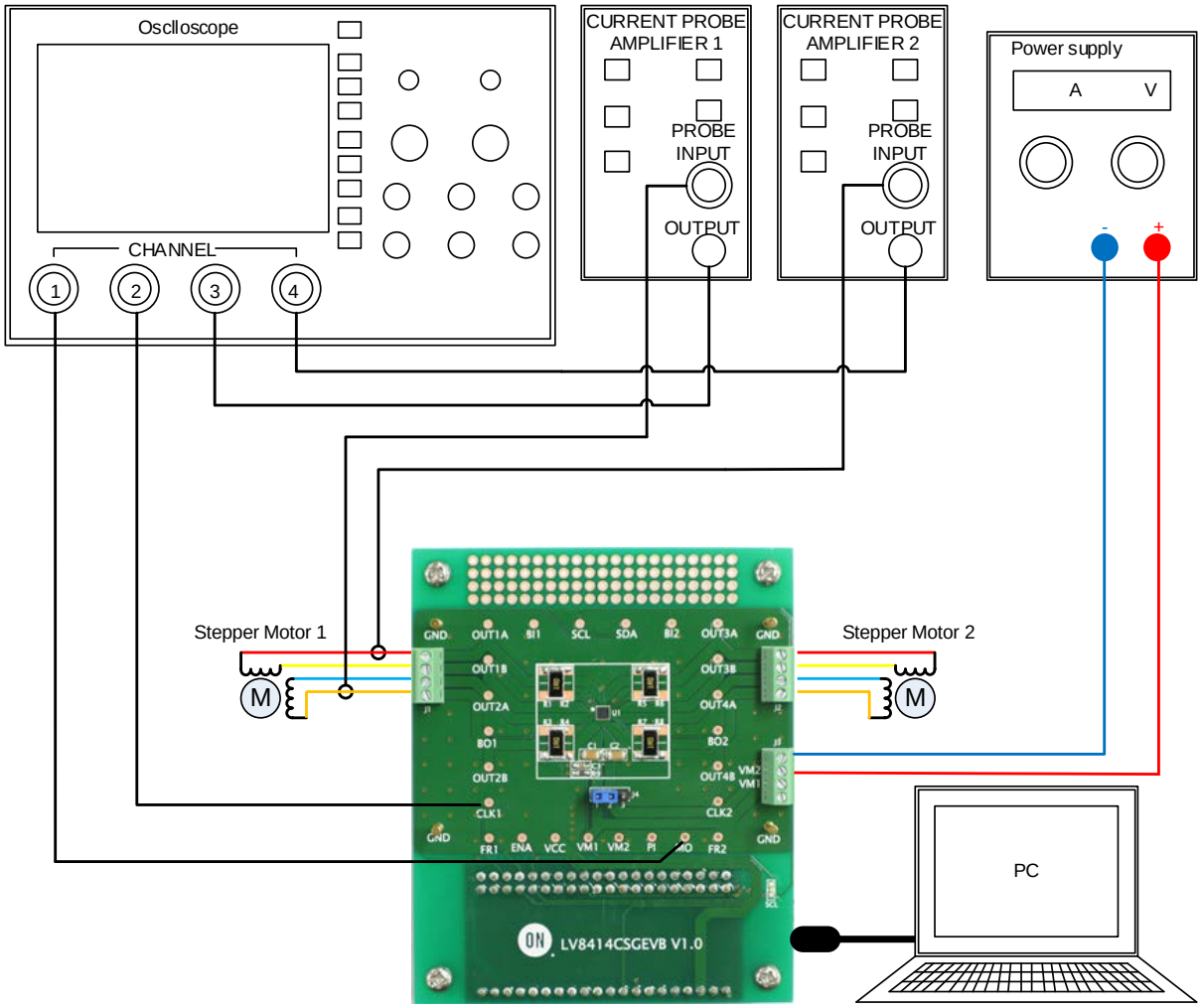

Figure 17: Setup for stepper motor

Step 3. Run "**M-DrAGON_version1134.exe**".
Step 4. Turn-on the power supply.

Step 5. Set “Motor” type and “Driver” setting window as shown below figure.

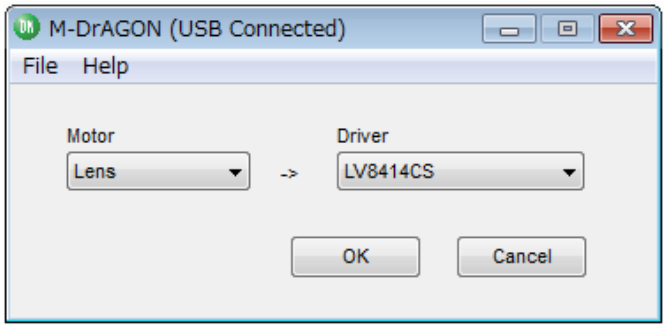

Figure 18: Motor type and Driver setting window

Step 6. Set the GUI parameters as shown below figure.

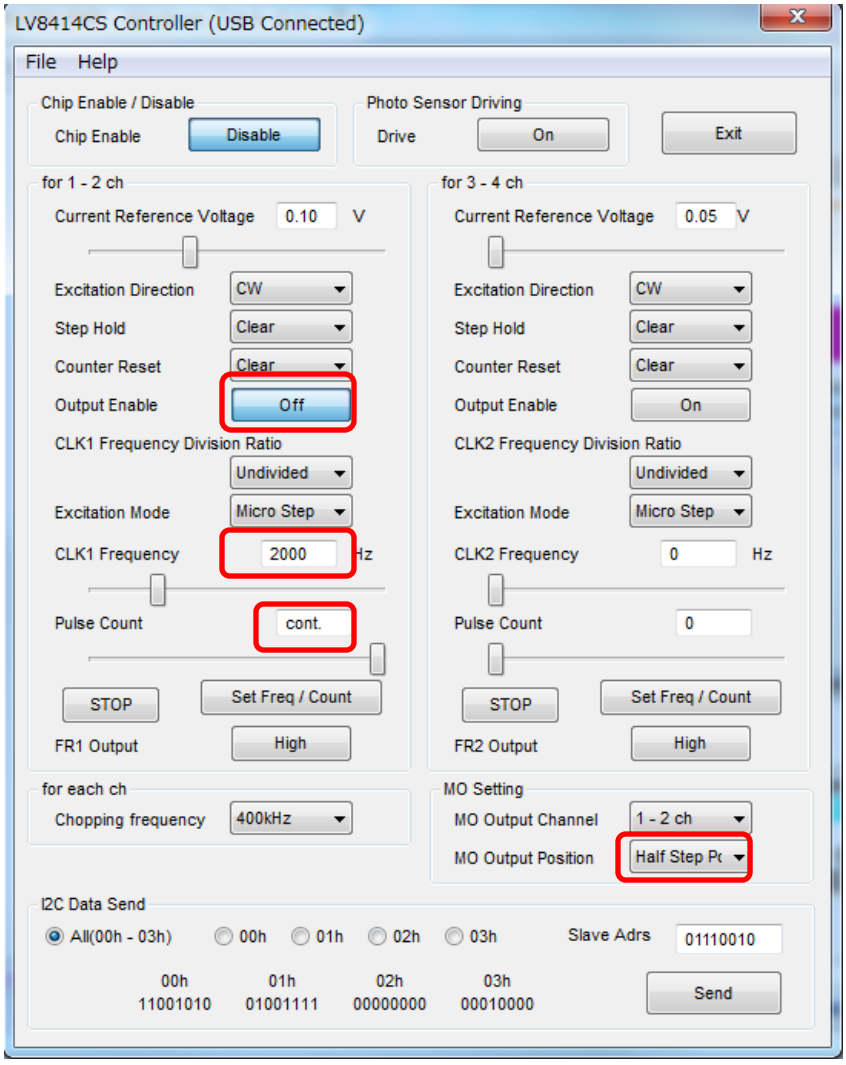

Figure 19: Setting parameter of GUI

Step 7. Click“Send” button.
Step 8. Click “Set Freq / count” button and then the motor begins to rotate.

- Monitor **MO** and **CLK1** terminal voltages using ch1 and ch2 of the scope. Monitor **OUT1** Aand **OUT2A** output current waveforms using ch3 and ch4.

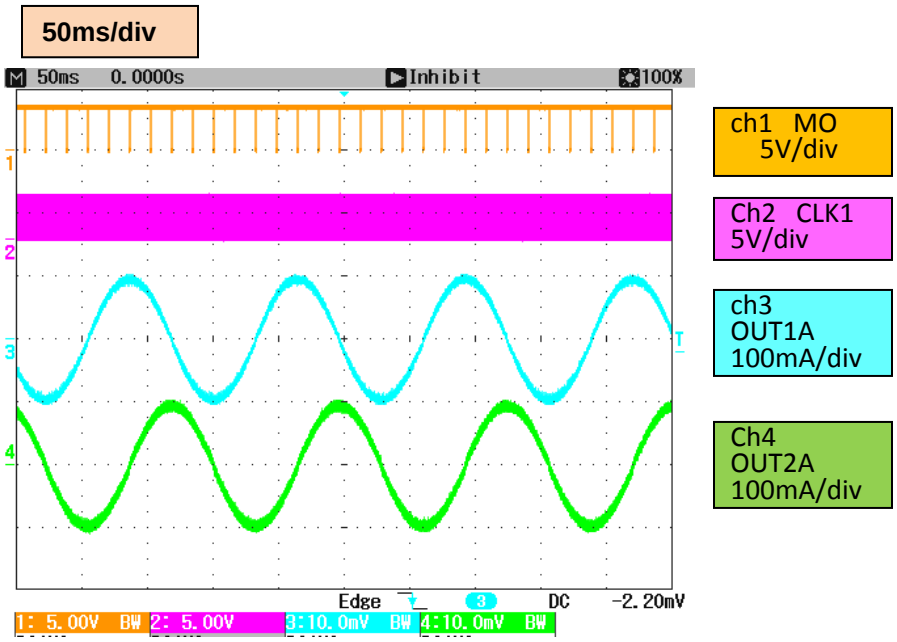

Figure 20: Waveforms for Stepper Motor

Step 9. Click “Stop” button and then the motor stop.
Step 10. Click “Disable” button. The indicator will changed to “Enable”

APPENDIX A. SCHEMATIC – LV8414CSGEVK

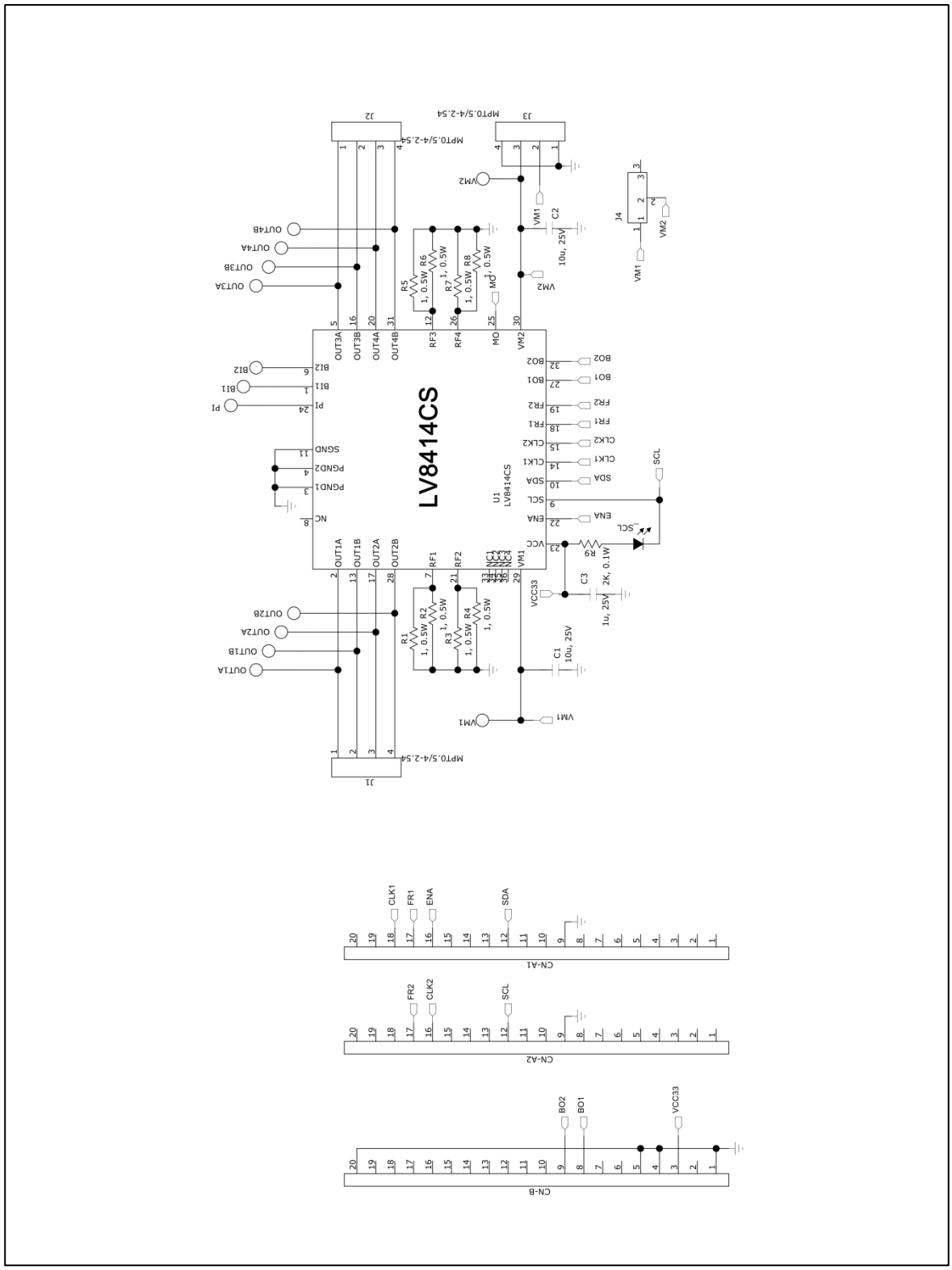

APPENDIX B. BILL OF MATERIAL - LV8414CSGEVK

Bill of Materials of the LV8414CSGEVB

ON Semiconductor

Designator	QTY.	Description	Value	Toler -ance	Footprint	Manufacturer	Part Number	Substi -tution Allowed	In- stalled	Lead Free
U1	1	Two channels of microstep drivers	-	-	WLP32K (2.47x2.47)	ON Semiconductor	LV8414CS	No	Yes	Yes
J1-2	2	Motor winding connector	-	-	Pitch 2.54mm	Phoenix Contact	MPT0.5/4-2.54	Yes	Yes	Yes
J3	1	DC power supply connector	-	-	Pitch 2.54mm	Phoenix Contact	MPT0.5/4-2.54	Yes	Yes	Yes
J4	1	Jumper for VM1/2 connector	-	-	Pitch 2.54mm	USECONN	PH-1x03SG	Yes	Yes	Yes
CN-A1-2	1	Female socket	-	-	Pitch 2.54mm	USECONN	FH-2x20	Yes	Yes	Yes
CN-B	1	Female socket	-	-	Pitch 2.54mm	USECONN	FH-1x20	Yes	Yes	Yes
C1-2	2	Capacitor	10u, 25V	±10%	3216 BIG	MURATA	GRM31CR71E106K	Yes	Yes	Yes
C3	1	Capacitor	1u, 25V	±10%	1608 BIG	MURATA	GRM188B31E105K	Yes	Yes	Yes
R1 R3 R5 R7	4	RFResistor	1, 0.5W	±5%	5025 BIG	ROHM	MCR50JZHJ1R0	Yes	Yes	Yes
R2 R4 R6 R8	4	RFResistor	1, 0.5W	±5%	5025 BIG	ROHM	MCR50JZHJ1R0	Yes	No	Yes
R9	1	Resistor	2K, 0.1W	±5%	1608 BIG	KOA	RK73B1JTxxxJ	Yes	Yes	Yes
SCL	1	LED	Yellow	-	1608 BIG	STANLEY	FY1111C-TR	Yes	Yes	Yes
	5	Terminal Pin ST-1-3	-	-				Yes	Yes	Yes