Ordering number : ENA2122

SANYO Semiconductors
DATA SHEET

An ON Semiconductor Company

Bi-CMOS LSI

LV5686PVC — For Car Audio Systems Multi-Power Supply IC

Overview

LV5686PVC is a multiple voltage regulator for Car Audio System. This IC has 3 voltage regulators, 5V output for a microcontroller, 9.85V output for illuminations, 9V output for audio control and 6 high side switches.
About protection circuits, it has Over-current-protection, Over-voltage-protection and Thermal-shut-down. This IC is most suitable for Car Audio System.

Features

- 3 system regulators
  - V_{DD} (MCU) : V_{OUT} 5V, I_{OUT} max 300mA, reverse current prevention.
  - Illumination : V_{OUT} 9.85V, I_{OUT} max 300mA
  - Audio : V_{OUT} 9.0V, I_{OUT} max 500mA
- 6 high side switches
  - AMP : I_{OUT} max 300mA, voltage difference between input and output: 1.0V
  - ANT : I_{OUT} max 300mA, voltage difference between input and output: 1.0V
  - EXT1 : I_{OUT} max 500mA, voltage difference between input and output: 1.0V
  - EXT2 : I_{OUT} max 500mA, voltage difference between input and output: 1.0V
  - EXT3 : I_{OUT} max 350mA, voltage difference between input and output: 0.5V
  - EXT4 : I_{OUT} max 500mA, voltage difference between input and output: 1.0V
- Over Current Protection
- BATT. Detection: under voltage1 (<6.5V), under voltage2 (<9.5V) and over voltage (>18V)
- Over Voltage Protection Typ 25V (shutdown except V_{DD})
- Thermal Shut Down Circuit Typ 175°C
- Applied P-LDMOS to Output stage

(Warning) The protector functions only improve the IC's tolerance and they do not guarantee the safety of the IC if used under the conditions out of safety range or ratings. Use of the IC such as use under overcurrent protection range, thermal shutdown state or V6IN OVS condition may degrade the IC's reliability and eventually damage the IC.

■ Any and all SANYO Semiconductor Co.,Ltd. products described or contained herein are, with regard to "standard application", intended for the use as general electronics equipment. The products mentioned herein shall not be intended for use for any "special application" (medical equipment whose purpose is to sustain life, aerospace instrument, nuclear control device, burning appliances, transportation machine, traffic signal system, safety equipment etc.) that shall require extremely high level of reliability and can directly threaten human lives in case of failure or malfunction of the product or may cause harm to human bodies, nor shall they grant any guarantee thereof. If you should intend to use our products for new introduction or other application different from current conditions on the usage of automotive device, communication device, office equipment, industrial equipment etc. , please consult with us about usage condition (temperature, operation time etc.) prior to the intended use. If there is no consultation or inquiry before the intended use, our customer shall be solely responsible for the use.

■ Specifications of any and all SANYO Semiconductor Co.,Ltd. products described or contained herein stipulate the performance, characteristics, and functions of the described products in the independent state, and are not guarantees of the performance, characteristics, and functions of the described products as mounted in the customer's products or equipment. To verify symptoms and states that cannot be evaluated in an independent device, the customer should always evaluate and test devices mounted in the customer's products or equipment.

SANYO Semiconductor Co., Ltd.
http://www.sanyosemi.com/en/network/

Specifications

Absolute Maximum Ratings at Ta = 25°C

Parameter	Conditions	Conditions		Ratings	Unit
Maximum supply voltage	V_{CC} max			36	V
Allowable power dissipation	Pd max	Independent IC	Ta ≤ 25°C	1.3	W
		Al heat sink *		5.3	W
		With an infinity heat sink		26.0	W
Peak supply voltage	V_{CC} peak	See below for the waveform applied.		50	V
Operating ambient temperature	Topr			-40 to +85	°C
Storage temperature	Tstg			-55 to +150	°C
Junction temperature	Tj max			150	°C

* : When the Aluminum heat sink (50mm × 50mm × 1.5mm) is used

Waveform of surge test

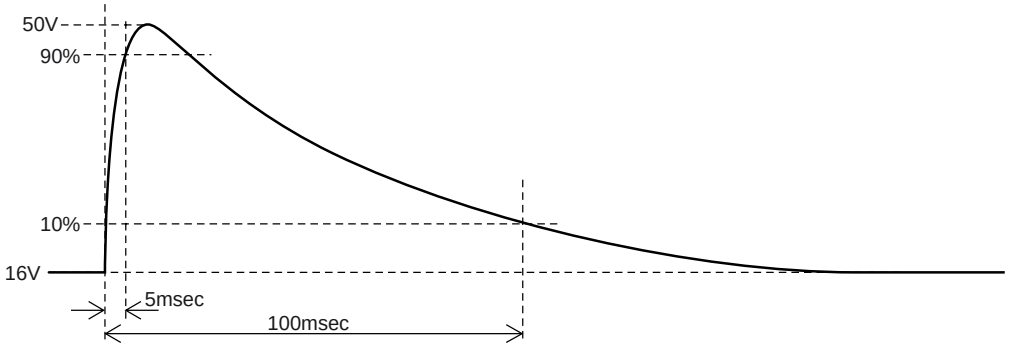

Recommended Operating Range at Ta = 25°C

Parameter	Conditions	Ratings	Unit
Operating supply voltage 1	V_{DD}(5V)	6.5 to 16	V
Operating supply voltage 2	AUDIO(9V)	11.5 to 16	V
Operating supply voltage 3	ILM(9.85V)	12.5 to 16	V
Operating supply voltage 4	AMP, ANT, EXT1, EXT2, EXT3, EXT4	7.5 to 16	V

Electrical Characteristics (1) at Ta = 25°C, V_{CC} = 14.4V (*1)

Parameter	Symbol	Conditions	Ratings			Unit
			min	typ	max	
Quiescent current	I_{CC}	V_{DD} No Load, EN/CTRL1/2 =「L/L/L」		60	100	μA
EN (AUDIO, ILM, AMP, EXT1 control)						
「L」input voltage	$V_{IL}1$	All: OFF	0		0.3	V
「M」input voltage	$V_{IM}1$	AUDIO, ILM, EXT1: ON	1.1	1.65	2.1	V
「H」input voltage	$V_{IM}1$	All: ON	2.7	3.3	5.5	V
Input impedance	$R_{IN}1$	Input voltage ≤ 3.3V	280	400	520	kΩ
CTRL1 (EXT2, EXT4 control)						
「L」input voltage	$V_{IL}2$	All: OFF	0		0.3	V
「M」input voltage	$V_{IM}2$	EXT2: ON	1.1	1.65	2.1	V
「H」input voltage	$V_{IM}2$	All: ON	2.7	3.3	5.5	V
Input impedance	$R_{IN}2$	Input voltage ≤ 3.3V	280	400	520	kΩ
CTRL2 (ANT, EXT3 control)						
「L」input voltage	$V_{IL}3$	All: OFF	0		0.3	V
「M」input voltage	$V_{IM}3$	ANT: ON	1.1	1.65	2.1	V
「H」input voltage	$V_{IM}3$	All: ON	2.7	3.3	5.5	V
Input impedance	$R_{IN}3$	Input voltage ≤ 3.3V	280	400	520	kΩ
V_{DD} output 5V (reverse current prevention diode implemented)						
V_{DD} output voltage	V_O1	I_O1 = 200mA	4.75	5.0	5.25	V
V_{DD} output current	I_O1	V_O1 > 4.7V	300			mA
Line regulation	$\Delta V_{OLN}1$	7.5V < V_{CC} < 16V, I_O1 = 200mA		30	60	mV
Load regulation	$\Delta V_{OLD}1$	1mA < I_O1 < 200mA		70	140	mV
Dropout voltage	$V_{DROP}1$	I_O1 = 150mA		1.25	1.5	V
Ripple rejection	$R_{REJ}1$	f = 120Hz, I_O1 = 200mA	40	50		dB
V_{DD} reverse current	Irev	V_O1 = 5V, V_{CC} = 0V		10	100	μA
ILM output 9.85V-ON ; EN =「M」,「H」						
ILM output voltage	V_O2	I_O2 = 200mA	9.36	9.85	10.34	V
ILM output current	I_O2	V_O2 > 9.2V	300			mA
Line regulation	$\Delta V_{OLN}2$	12.5V < V_{CC} < 16V, I_O2 = 200mA		30	60	mV
Load regulation	$\Delta V_{OLD}2$	1mA < I_O2 < 200mA		70	140	mV
Dropout voltage	$V_{DROP}2$	I_O2 = 200mA		1.0	1.5	V
Ripple rejection	$R_{REJ}2$	f = 120Hz, I_O2 = 200mA	40	50		dB

(*1) All the specification is defined based on the tests performed under the conditions where Tj and Ta(=25°C) are almost equal. These tests were performed with pulse load to minimize the increase of junction temperature (Tj).

Electrical Characteristics (2) at Ta = 25°C, V_{CC} = 14.4V

Parameter	Symbol	Conditions	Ratings			Unit
			min	typ	max	
AUDIO output 9.0V -ON ; EN = ⌈M⌋, ⌈H⌋						
AUDIO output voltage	V_O3	I_O3 = 400mA	8.55	9.0	9.45	V
AUDIO output current	I_O3	V_O3 > 8.5V	500			mA
Line regulation	$\Delta V_{OLN}3$	11.5V < V_{CC} < 16V, I_O3 = 400mA		40	80	mV
Load regulation	$\Delta V_{OLD}3$	1mA < I_O3 < 400mA		70	140	mV
Dropout voltage	$V_{DROP}3$	I_O3 = 200mA		0.6	1.0	V
Ripple rejection	$R_{REJ}3$	f = 120Hz, I_O3 = 200mA	45	60		dB
AMP Remote-ON ; EN = ⌈H⌋						
Output voltage	V_O4	I_O4 = 300mA	V_{CC}-1.8	V_{CC}-1.0		V
Output current	I_O4	$V_O4 \geq V_{CC}$-1.8	300			mA
ANT Remote-ON ; CTRL2 = ⌈M⌋, ⌈H⌋						
Output voltage	V_O5	I_O5 = 300mA	V_{CC}-1.8	V_{CC}-1.0		V
Output current	I_O5	$V_O5 \geq V_{CC}$-1.8	300			mA
EXT1-ON ; EN = ⌈M⌋, ⌈H⌋						
Output voltage	V_O6	I_O6 = 500mA	V_{CC}-1.8	V_{CC}-1.0		V
Output current	I_O6	$V_O6 \geq V_{CC}$-1.8	500			mA
EXT2-ON ; CTRL1 = ⌈M⌋, ⌈H⌋						
Output voltage	V_O7	I_O7 = 500mA	V_{CC}-1.8	V_{CC}-1.0		V
Output current	I_O7	$V_O7 \geq V_{CC}$-1.8	500			mA
EXT3-ON ; CTRL2 = ⌈H⌋						
Output voltage	V_O8	I_O8 = 350mA	V_{CC}-1.8	V_{CC}-1.0		V
Output current	I_O8	$V_O8 \geq V_{CC}$-1.0	350			mA
EXT4-ON ; CTRL1 = ⌈H⌋						
Output voltage	V_O9	I_O9 = 500mA	V_{CC}-1.8	V_{CC}-1.0		V
Output current	I_O9	$V_O9 \geq V_{CC}$-1.8	500			mA

Electrical Characteristics (3) at Ta = 25°C, V_{CC} = 14.4V

Parameter	Symbol	Conditions	Ratings			Unit
			min	typ	max	
BATT.DET output: V_{CC} voltage detection						
BATT.DET output voltage	Voff	I_{OL} = 1mA, undetected.		0.3	0.4	V
BATT.DET output voltage	Von	I_{OH} = -1mA, Under-voltage1	V_{DD}-0.4	V_{DD}-0.3		V
Under-voltage detect threshold1	VthL1	V_{CC} falling, BATT.DET: "Hi-Z" → "Hi"	6.3	6.5	6.7	V
Under-voltage release threshold1	VthL1r	V_{CC} rising	6.8	7.0	7.2	V
Under-voltage1 Hysteresis	Vuv1hys		0.4	0.5	0.6	V
Under-voltage detect threshold2	VthL2	V_{CC} falling, BATT.DET: "Lo" → "Hi-Z"	9.25	9.5	9.75	V
Under-voltage release threshold2	VthL2r	V_{CC} rising	9.75	10	10.25	V
Under-voltage2 Hysteresis	Vuv2hys		0.4	0.5	0.6	V
Over-voltage detect threshold	VthH	V_{CC} rising, BATT.DET: "Lo" → "Hi-Z"	17	18	19	V
Over-voltage release threshold	VthHr	V_{CC} falling	16.5	17.5	18.5	V
Over-voltage Hysteresis	Vovhys		0.4	0.5	0.6	V
Overvoltage shutdown	Vovp	no hysteresis	22.5	25	27.5	V

*V_{CC} voltage detection & over-voltage shutdown

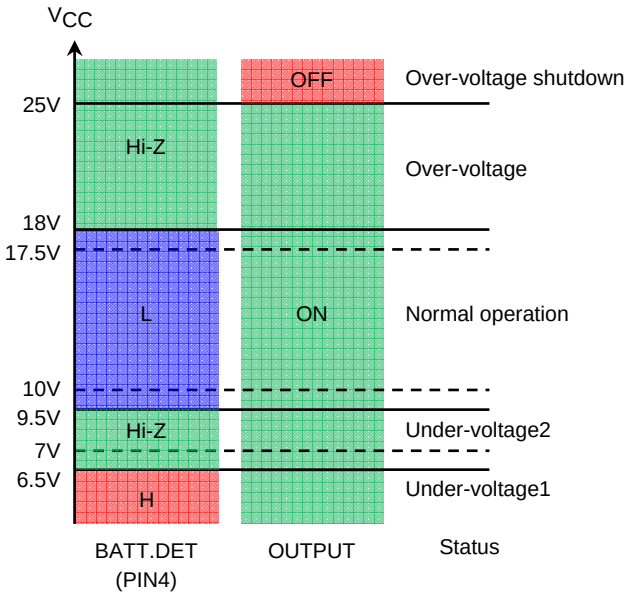

CTRL terminal truth table

EN	EXT1	AUDIO	ILM	AMP
L	OFF	OFF	OFF	OFF
M	ON	ON	ON	OFF
H	ON	ON	ON	ON

CTRL1	EXT2	EXT4
L	OFF	OFF
M	ON	OFF
H	ON	ON

CTRL2	ANT	EXT3
L	OFF	OFF
M	ON	OFF
H	ON	ON

EN/CTRL1/CTRL2 voltage range and threshold

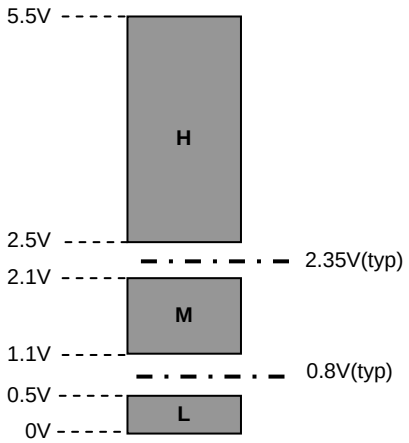

Package Dimensions

unit : mm (typ)

3336

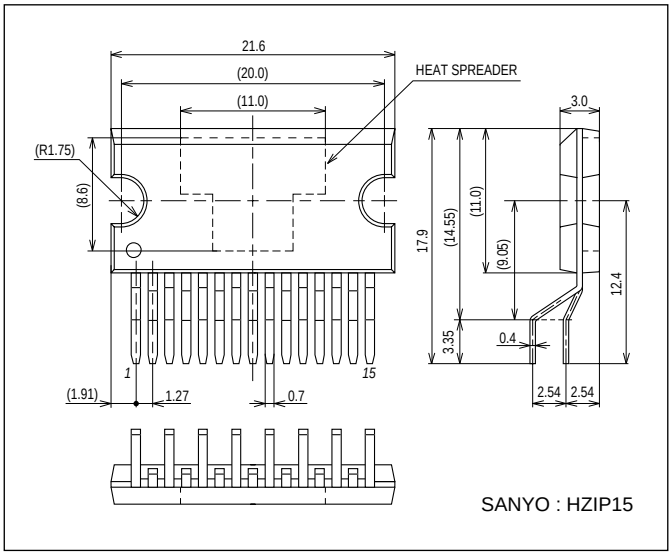

• Allowable power dissipation derating curve

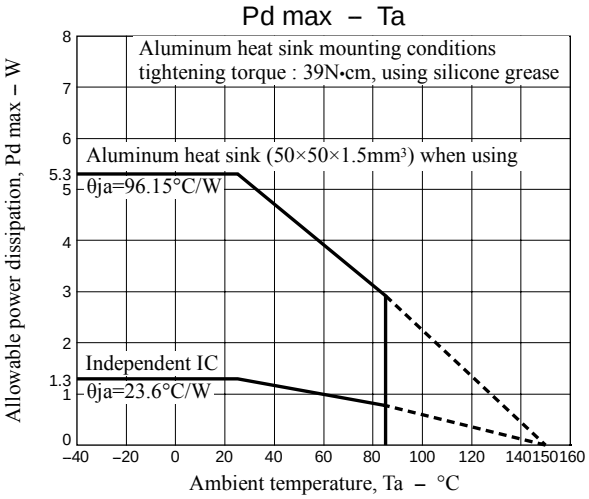

Pin assignment

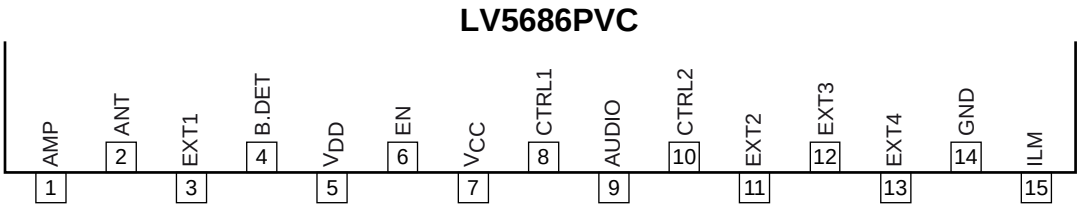

Application Circuit Example

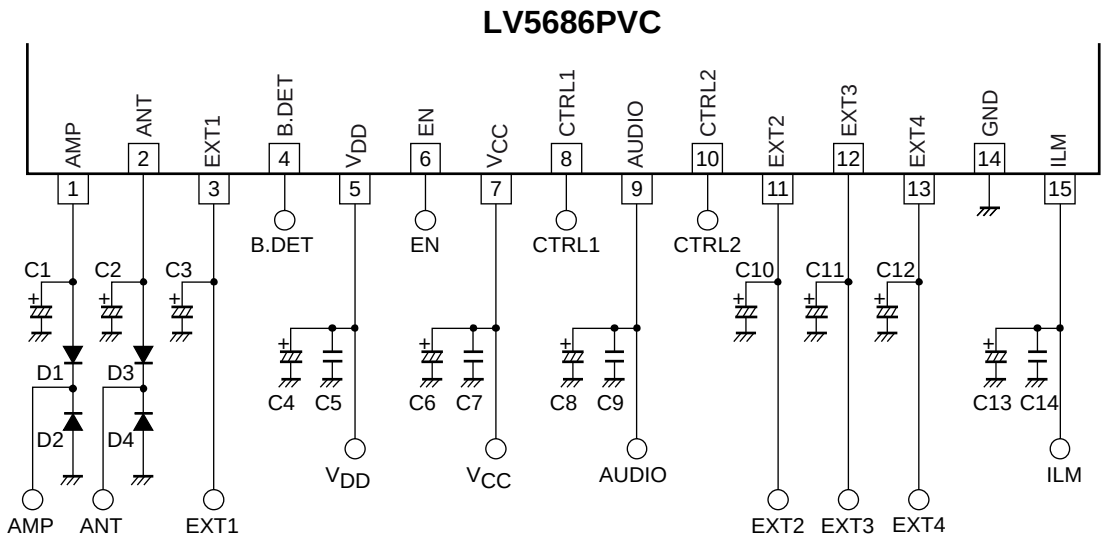

Peripheral parts

Part name	Description	Recommended value	Note
C1, C2, C3, C10, C11, C12	output stabilization capacitor for high-side switches	greater than 2.2μF	
C4, C8, C13	output stabilization capacitor	greater than10μF (*1)	
C5, C9, C14	output stabilization capacitor	greater than0.22μF (*1)	Ceramic capacitor
C6	Capacitor for bypass power supply	greater than 100μF	Make sure to implement close to V_{CC} and GND.
C7	Capacitor for oscillation protector	greater than 0.22μF	
D1, D2, D3, D4	Internal device protector diode	SANYO SB1003M3	(*2)

Note: Circuit diagram and the values are only tentative and subject to change.

(*1) Make sure that total capacitance of regulator output is greater than 10μF and meets the condition of ESR = 0.001 to 10Ω , in which voltage/temperature dependence and unit differences are taken into consideration. Moreover, in case of electrolytic capacitor, high-frequency characteristics should be sufficiently good.

(*2) These parts are necessary if output voltage of high-side switches gets lower than GND or higher than V_{CC}. The same consideration is required on EXT1 through EXT4.

Block Diagram

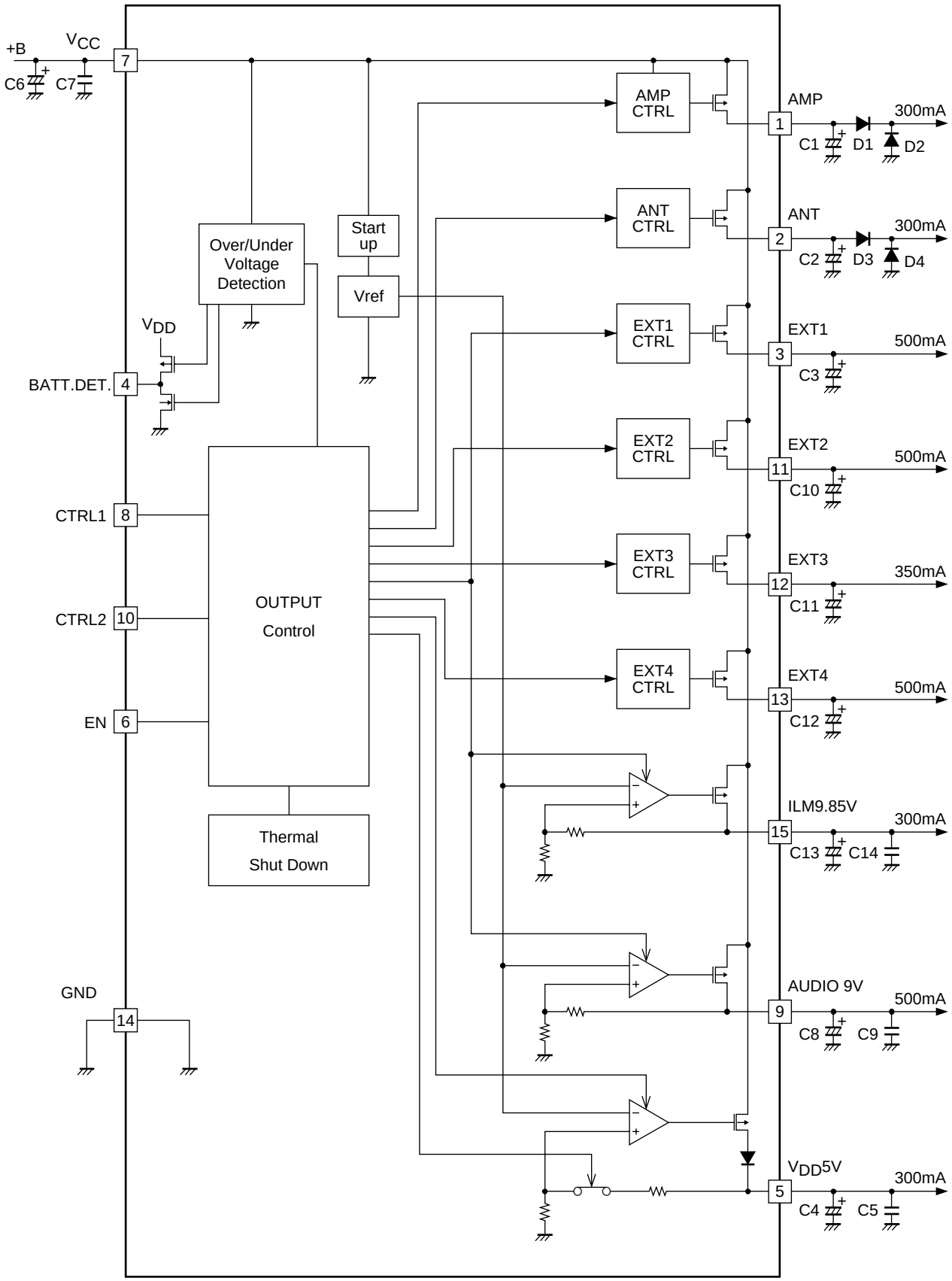

Pin Function

Pin No.	Pin name	Description	Equivalent Circuit
1	AMP	AMP output When EN = H, AMP is ON V_{CC}-1V/300mA	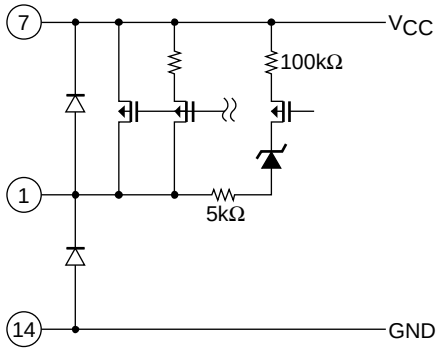
2	ANT	ANT output When CTRL2 = M or H, ANT is ON V_{CC}-1V/300mA	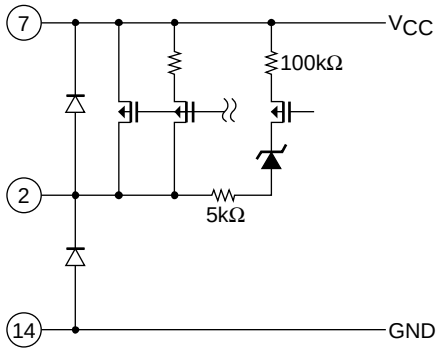
3	EXT1	EXT1 output When EN = M or H, EXT1 is ON V_{CC}-1V/500mA	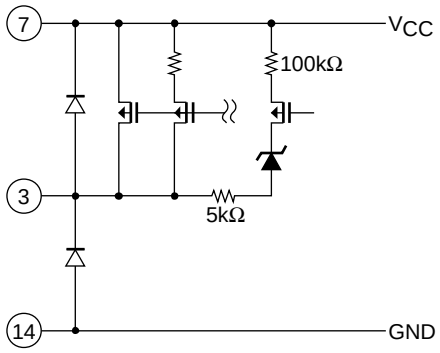
4	BATT.DET	Battery voltage detector output L : 9.5V<V_{CC}<18V HiZ : 6.5V<V_{CC}<9.5V or V_{CC}>18V H (V_{DD}) : V_{CC}<6.5V	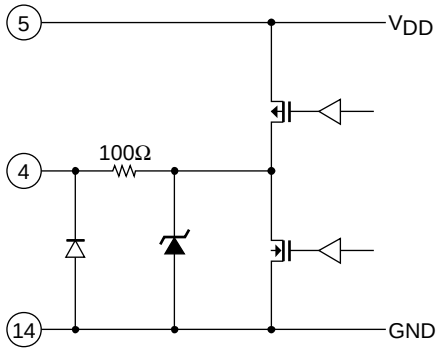

Continued on next page.

Continued from preceding page.

Pin No.	Pin name	Description	Equivalent Circuit
5	V_{DD}	V_{DD} output, 5.0V/0.3A	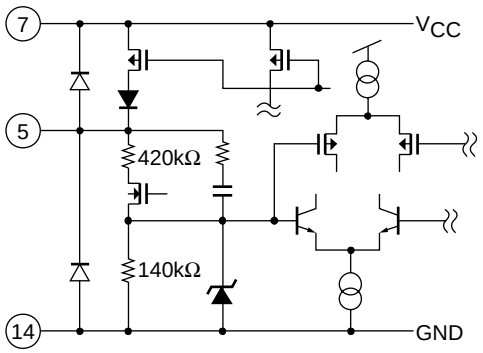
6 8 10	EN CTRL1 CTRL2	Control input 3-value input	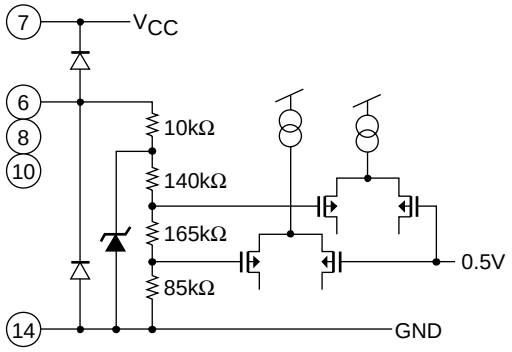
7	V_{CC}	Power supply	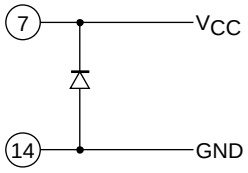
9	AUDIO	AUDIO output When EN = M or H, AUDIO is ON 9V/0.5A	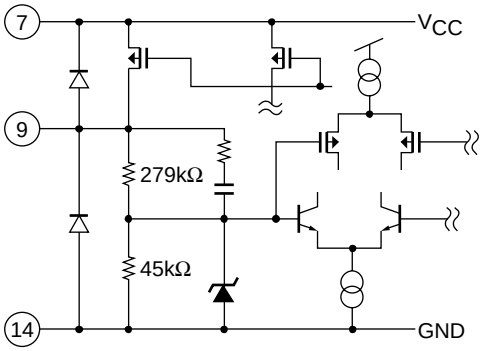
11	EXT2	EXT2 output When CTRL1 = M or H, EXT2 is ON V_{CC}-1V/500mA	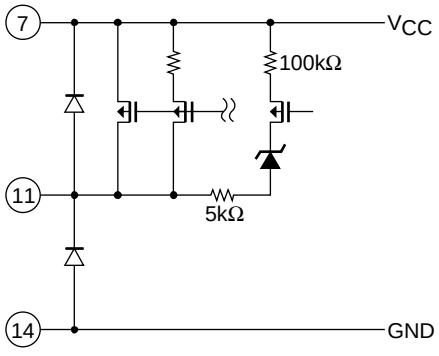

Continued on next page.

Continued from preceding page.

Pin No.	Pin name	Description	Equivalent Circuit
12	EXT3	EXT3 output When CTRL2 = H, EXT3 is ON V_{CC}-0.5V/350mA	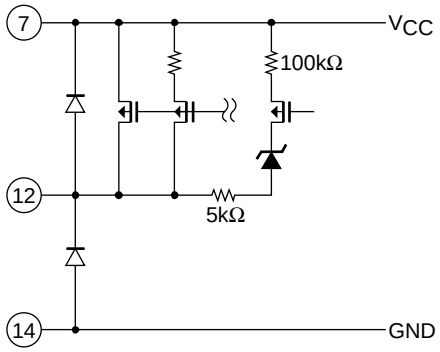
13	EXT4	EXT4 output When CTRL1 = H, EXT4 is ON V_{CC}-1V/500mA	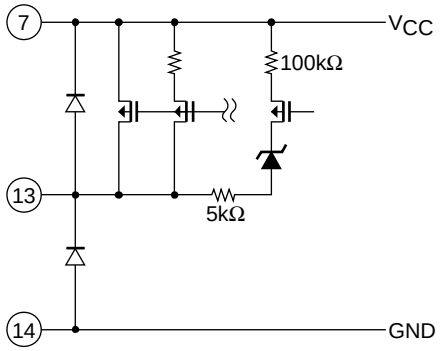
14	GND		
15	ILM	ILM output When EN = M or H, ILM is ON 9.85V/0.3A	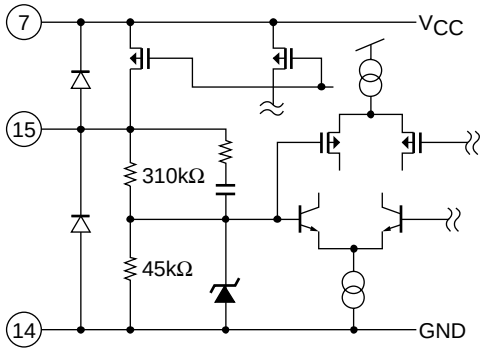

Timing Chart

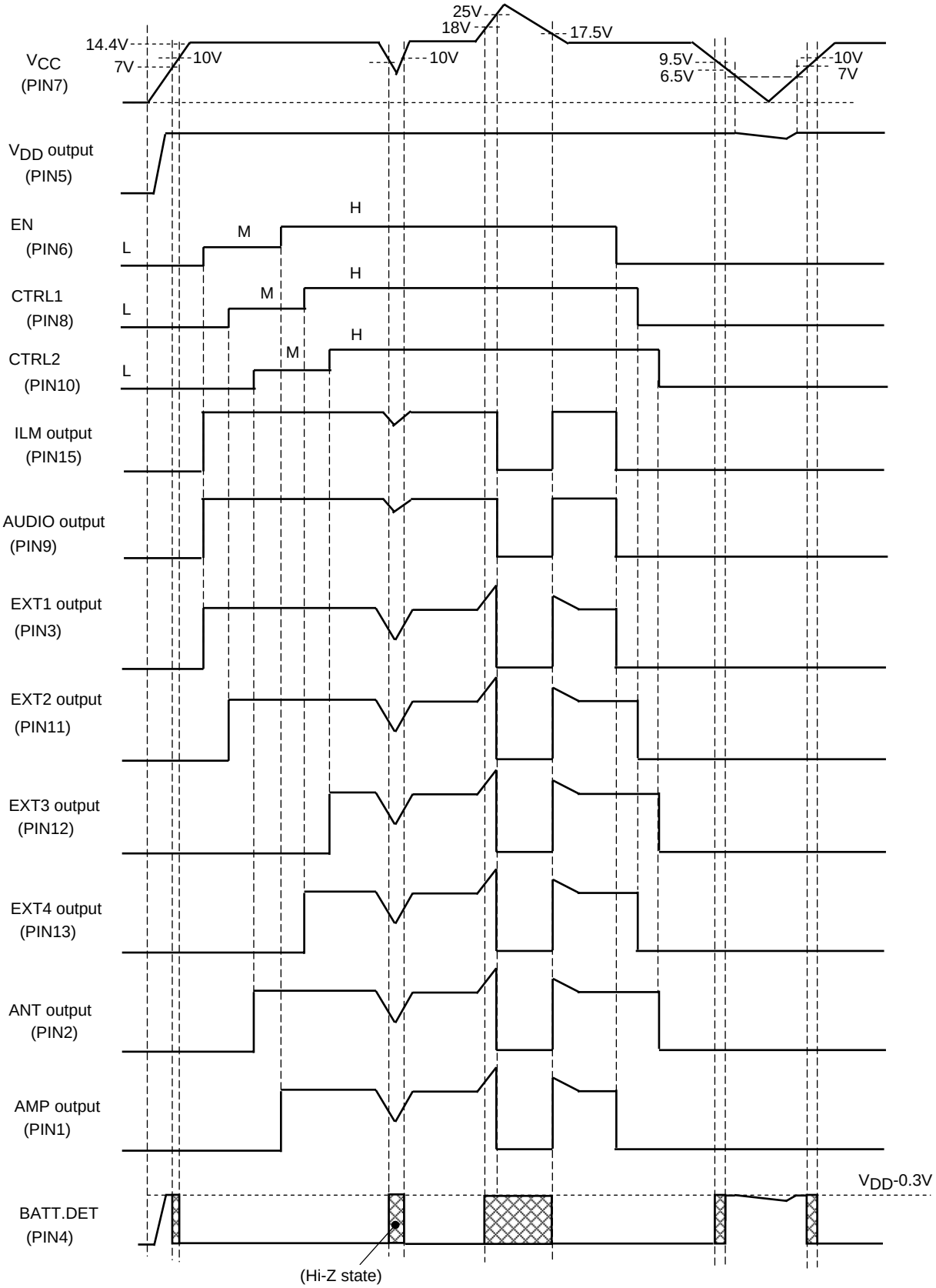

HZIP15 Heat sink attachment

Heat sinks are used to lower the semiconductor device junction temperature by leading the head generated by the device to the outer environment and dissipating that heat.

a. Unless otherwise specified, for power ICs with tabs and power ICs with attached heat sinks, solder must not be applied to the heat sink or tabs.

b. Heat sink attachment
- Use flat-head screws to attach heat sinks.
- Use also washer to protect the package.
- Use tightening torques in the ranges 39-59Ncm(4-6kgcm) .
- If tapping screws are used, do not use screws with a diameter larger than the holes in the semiconductor device itself.
- Do not make gap, dust, or other contaminants to get between the semiconductor device and the tab or heat sink.
- Take care a position of via hole .
- Do not allow dirt, dust, or other contaminants to get between the semiconductor device and the tab or heat sink.
- Verify that there are no press burrs or screw-hole burrs on the heat sink.
- Warping in heat sinks and printed circuit boards must be no more than 0.05 mm between screw holes, for either concave or convex warping.
- Twisting must be limited to under 0.05mm.
- Heat sink and semiconductor device are mounted in parallel. Take care of electric or compressed air drivers
- The speed of these torque wrenches should never exceed 700 rpm, and should typically be about 400 rpm.

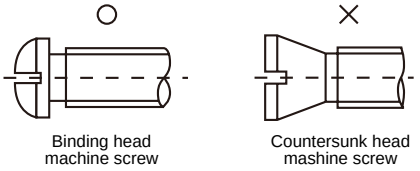

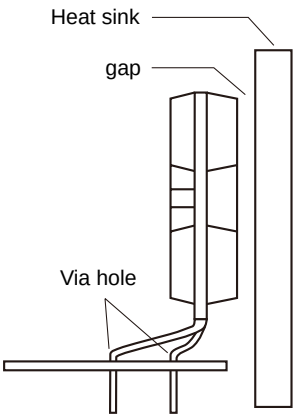

c. Silicone grease
- Spread the silicone grease evenly when mounting heat sinks.
- Sanyo recommends YG-6260 (Momentive Performance Materials Japan LLC)

d. Mount
- First mount the heat sink on the semiconductor device, and then mount that assembly on the printed circuit board.
- When attaching a heat sink after mounting a semiconductor device into the printed circuit board, when tightening up a heat sink with the screw, the mechanical stress which is impossible to the semiconductor device and the pin doesn't hang.

e. When mounting the semiconductor device to the heat sink using jigs, etc.,
- Take care not to allow the device to ride onto the jig or positioning dowel.
- Design the jig so that no unreasonable mechanical stress is applied to the semiconductor device.

f. Heat sink screw holes
- Be sure that chamfering and shear drop of heat sinks must not be larger than the diameter of screw head used.
- When using nuts, do not make the heat sink hole diameters larger than the diameter of the head of the screws used. A hole diameter about 15% larger than the diameter of the screw is desirable.
- When tap screws are used, be sure that the diameter of the holes in the heat sink are not too small. A diameter about 15% smaller than the diameter of the screw is desirable.

g. There is a method to mount the semiconductor device to the heat sink by using a spring band. But this method is not recommended because of possible displacement due to fluctuation of the spring force with time or vibration.

- SANYO Semiconductor Co.,Ltd. assumes no responsibility for equipment failures that result from using products at values that exceed, even momentarily, rated values (such as maximum ratings, operating condition ranges, or other parameters) listed in products specifications of any and all SANYO Semiconductor Co.,Ltd. products described or contained herein.
- Regarding monolithic semiconductors, if you should intend to use this IC continuously under high temperature, high current, high voltage, or drastic temperature change, even if it is used within the range of absolute maximum ratings or operating conditions, there is a possibility of decrease reliability. Please contact us for a confirmation.
- SANYO Semiconductor Co.,Ltd. strives to supply high-quality high-reliability products, however, any and all semiconductor products fail or malfunction with some probability. It is possible that these probabilistic failures or malfunction could give rise to accidents or events that could endanger human lives, trouble that could give rise to smoke or fire, or accidents that could cause damage to other property. When designing equipment, adopt safety measures so that these kinds of accidents or events cannot occur. Such measures include but are not limited to protective circuits and error prevention circuits for safe design, redundant design, and structural design.
- In the event that any or all SANYO Semiconductor Co.,Ltd. products described or contained herein are controlled under any of applicable local export control laws and regulations, such products may require the export license from the authorities concerned in accordance with the above law.
- No part of this publication may be reproduced or transmitted in any form or by any means, electronic or mechanical, including photocopying and recording, or any information storage or retrieval system, or otherwise, without the prior written consent of SANYO Semiconductor Co.,Ltd.
- Any and all information described or contained herein are subject to change without notice due to product/technology improvement, etc. When designing equipment, refer to the "Delivery Specification" for the SANYO Semiconductor Co.,Ltd. product that you intend to use.
- Upon using the technical information or products described herein, neither warranty nor license shall be granted with regard to intellectual property rights or any other rights of SANYO Semiconductor Co.,Ltd. or any third party. SANYO Semiconductor Co.,Ltd. shall not be liable for any claim or suits with regard to a third party's intellectual property rights which has resulted from the use of the technical information and products mentioned above.

This catalog provides information as of September, 2012. Specifications and information herein are subject
to change without notice.