Ordering number : ENA2181A

LV56841PVD

Bi-CDMOS LSI

ON Semiconductor®

http://onsemi.com

For Car Audio Systems
Multi-Power Supply IC

Overview

The LV56841PVD is a power supply IC suitable for CD receiver system for car audio system.
This IC integrates 5 systems of regulator output, 2 systems of high side power switch, over-current protector, overvoltage protector and over-heat protector .
Supply for SW33V outputs is low voltage specification, which enables drastic reduction of power dissipation compared to the existing model. (the package is HZIP15).

Function

- Low consumption current: 50μA (typ, only V_{DD} output is in operation)
- 5 systems of regulator output
  - V_{DD} for microcontroller: output voltage: 3.3V, maximum output current: 350mA
    Reverse current protection implemented.
  - For system: output voltage: 3.3V, maximum output current: 350mA
  - For audio: output voltage: 5 to 12V (set by external resistors), maximum output current: 300mA
  - For illumination: output voltage: 5 to 12V (set by external resistors), maximum output current: 300mA
  - For CD: output voltage: 6V, maximum output current: 1500mA
- 2 lines of high side switch with interlock V_{CC}
  - EXT: Maximum output current: 500mA, voltage difference between input and output: 0.75V
  - ANT: Maximum output current: 300mA, voltage difference between input and output: 0.5V
- Supply input
  - V6IN: 6V for system (SW33V)
  - $V_{CC}1$: For internal reference voltage, control circuits, and V_{DD} output.
  - $V_{CC}2$: For AUDIO, illumination, CD, EXT/ANT
- Over-current protector
- Overvoltage protector(OVP): $V_{CC}1$,$V_{CC}2$ Typ 21V (All outputs except V_{DD} are turned off)
  Overvoltage shutdown(OVS): V6IN Typ 21V (All outputs except V_{DD} are turned off)
- Overheat protector: Typ 175°C
- Pch-LDMOS is used in power output block

(Warning) The protector functions only improve the IC's tolerance and they do not guarantee the safety of the IC if used under the conditions out of safety range or ratings. Use of the IC such as use under over-current protection range, thermal shutdown state or V6IN OVS condition may degrade the IC's reliability and eventually damage the IC.

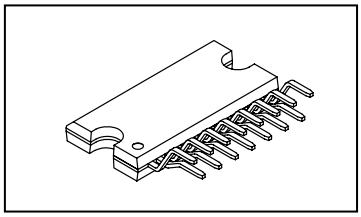

HZIP15

ORDERING INFORMATION

See detailed ordering and shipping information on page 15 of this data sheet.

Semiconductor Components Industries, LLC, 2014

Absolute Maximum Ratings at Ta = 25°C

Parameter	Symbol	Conditions		Ratings	Unit
Supply voltage	V_{CC} max	$V_{CC}1$, $V_{CC}2$		36	V
	V6IN max	V6IN (*)		7	V
Input voltage	V_{IN} max	CTRL1, CTRL2		7	V
Allowable power dissipation	Pd max	-Independent IC	Ta ≤ 25°C	1.3	W
		Al heat sink *		5.3	W
		-Size of heatsink: infinite		26	W
Peak supply voltage	V_{CC} peak	See the appendix for waveform.		50	V
Operating ambient temperature	Topr			-40 to +85	°C
Storage temperature	Tstg			-55 to +150	°C
Junction temperature	Tj max			150	°C

* : When the Aluminum heat sink (50mm × 50mm × 1.5mm) is used

Waveform of surge test ($V_{CC}1$, $V_{CC}2$)

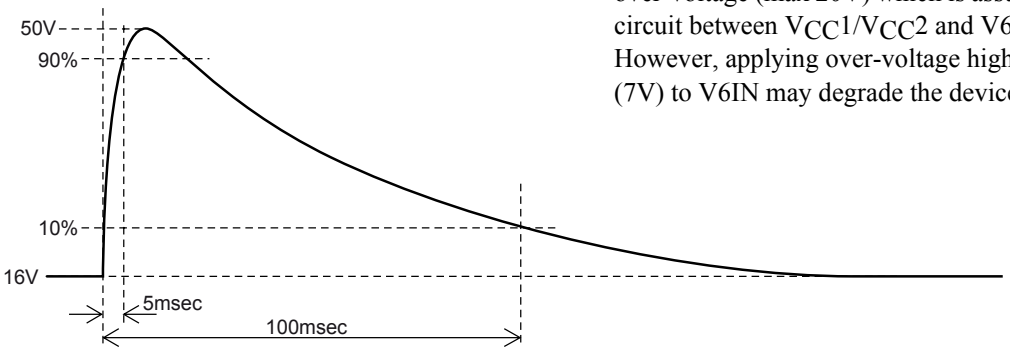

*V6IN is designed to tolerant toward short period of over-voltage (max 20V) which is assumed in condition of short circuit between $V_{CC}1$/$V_{CC}2$ and V6IN.
However, applying over-voltage higher than maximum rating (7V) to V6IN may degrade the device reliability

Stresses exceeding those listed in the Maximum Ratings table may damage the device. If any of these limits are exceeded, device functionality should not be assumed, damage may occur and reliability may be affected.

Recommended Operating range at Ta = 25°C

$V_{CC}1$

Parameter	Conditions	Ratings	Unit
Operating supply voltage 1	V_{DD} output	7 to 16	V

$V_{CC}2$

Parameter	Conditions	Ratings	Unit
Operating supply voltage 2	ILM output (10V)	12 to 16	V
	ILM output (8V)	10 to 16	V
Operating supply voltage 3	AUDIO output (9V)	10 to 16	V
	AUDIO output (5V)	8 to 16	V
Operating supply voltage 4	CD output (I_O = 1.3A)	10.5 to 16	V
	CD output (I_O ≤ 1A)	10 to 16	V
Operating supply voltage 5	EXT output, ANT output	10 to 16	V

V6IN

Parameter	Conditions	Ratings	Unit
Operating supply voltage 6	SW33V output	5.5 to 6.5	V

Functional operation above the stresses listed in the Recommended Operating Ranges is not implied. Extended exposure to stresses beyond the Recommended Operating Ranges limits may affect device reliability.

Electrical Characteristics : $V_{CC}1 = V_{CC}2 = 14.4V$, V6IN = 6V at Ta = 25°C (*1)

Parameter	Symbol	Conditions	Ratings			Unit
			min	typ	max	
Quiescent current	I_{CC}	V_{DD} w/out load, CTRL1/2 = "L/L"		50	100	μA
CTRL1 input (ANT/EXT/ILM)						
Low input voltage	$V_{IL}1$		0		0.5	V
M1 input voltage	$V_{IM1}1$		0.8	1.1	1.4	V
M2 input voltage	$V_{IM2}1$		1.9	2.2	2.5	V
High input voltage	$V_{IH}1$		2.9	3.3	5.5	V
Input impedance	$R_{IN}1$	input voltage ≤ 3.3V	280	400	480	kΩ
CTRL2 input (CD/AUDIO/SW33V)						
Low input voltage	$V_{IL}2$		0		0.5	V
M1 input voltage	$V_{IM1}2$		0.8	1.1	1.4	V
M2 input voltage	$V_{IM2}2$		1.9	2.2	2.5	V
High input voltage	$V_{IH}2$		2.9	3.3	5.5	V
Input impedance	$R_{IN}2$	input voltage ≤ 3.3V	280	400	480	kΩ
V_{DD} output (3.3V) (reverse current prevention diode implemented)						
Output voltage	V_O1	I_O1 = 200mA	3.13	3.3	3.47	V
Output current	I_O1	$V_O1 \geq 3.1V$	350			mA
Line regulation	$\Delta V_{OLN}1$	$7.5V < V_{CC}1 < 16V$, I_O1 = 200mA		30	90	mV
Load regulation	$\Delta V_{OLD}1$	$1mA < I_O1 < 200mA$		70	150	mV
Dropout voltage1	$V_{DROP}11$	I_O1 = 100mA		2.6	3.1	V
Dropout voltage2	$V_{DROP}12$	I_O1 = 200mA		2.8	3.5	V
Ripple rejection (*2)	$R_{REJ}1$	f = 120Hz, $V_{CC}1$ = 0.5Vpp I_O1 = 200mA	40	50		dB
Reverse current	Irev	V_O1 = 3.3V, $V_{CC}1$ = V6IN = 0V		1	50	μA
SW33V output (3.3V) ; CTRL2 = "M2 or H"						
Output voltage	V_O2	I_O2 = 200mA	3.13	3.3	3.47	V
Output current	I_O2	$V_O2 \geq 3.1V$	350			mA
Line regulation	$\Delta V_{OLN}2$	$5.7V < V6IN < 6.5V$, I_O2 = 200mA		30	90	mV
Load regulation	$\Delta V_{OLD}2$	$1mA < I_O2 < 200mA$		70	150	mV
Dropout voltage	$V_{DROP}2$	I_O2 = 200mA		0.25	0.5	V
Ripple rejection (*2)	$R_{REJ}2$	f = 120Hz, V6IN or $V_{CC}1$ = 0.5Vpp I_O2 = 200mA	40	50		dB
AUDIO (5-12V)output ; CTRL2 = " H"						
AUDIO_F voltage	V_I3		1.212	1.25	1.288	V
AUDIO_F input current	$I_{IN}3$		-1		1	μA
AUDIO output voltage 1	V_O3	I_O3 = 200mA, R3 = 30kΩ, R4 = 5.6kΩ (*3)	7.65	8.0	8.35	V
AUDIO output voltage 2	V_O3'	I_O3 = 200mA, R3 = 27kΩ, R4 = 4.7kΩ (*3)	8.13	8.5	8.87	V
AUDIO output voltage 3	V_O3''	I_O3 = 200mA, R3 = 24kΩ, R4 = 3.9kΩ (*3)	8.6	9.0	9.4	V
AUDIO output voltage 4	V_O3'''	I_O3 = 200mA, R3 = 30kΩ, R4 = 10kΩ (*3)	4.75	5.0	5.25	V
AUDIO output current	I_O3		300			mA
Line regulation	$\Delta V_{OLN}3$	$10V < V_{CC}2 < 16V$, I_O3 = 200mA		30	90	mV
Load regulation	$\Delta V_{OLD}3$	$1mA < I_O3 < 200mA$		70	150	mV
Dropout voltage 1	$V_{DROP}3$	I_O3 = 200mA		0.4	0.6	V
Ripple rejection (*2)	$R_{REJ}3$	f = 120Hz, I_O3 = 200mA	40	50		dB
ILM (5-12V) output ; CTRL2 = "M1 or H"						
ILM_F voltage	V_I4		1.212	1.25	1.288	V
ILM_F input current	$I_{IN}4$		-1		1	μA
ILM output voltage 1	V_O4	I_O4 = 200mA, R1 = 43kΩ, R2 = 5.1kΩ (*3)	11.21	11.8	12.39	V
ILM output voltage 2	V_O4'	I_O4 = 200mA, R1 = 56kΩ, R2 = 7.5kΩ (*3)	9.97	10.5	11.03	V
ILM output voltage 3	V_O4''	I_O4 = 200mA, R1 = 30kΩ, R2 = 5.6kΩ (*3)	7.6	8.0	8.4	V
ILM output voltage 4	V_O4'''	I_O4 = 200mA, R1 = 30kΩ, R2 = 10kΩ (*3)	4.75	5.0	5.25	V
ILM output current	I_O4		300			mA

Continued on next page.

Continued from preceding page.

Parameter	Symbol	Conditions	Ratings			Unit
			min	typ	max	
Line regulation	$\Delta V_{OLN}4$	10V < $V_{CC}2$ < 16V, I_O4 = 200mA R1 = 30kΩ, R2 = 5.6kΩ		30	90	mV
Load regulation	$\Delta V_{OLD}4$	1mA < I_O4 < 200mA		70	150	mV
Dropout voltage 1	$V_{DROP}4$	I_O4 = 200mA		0.7	1.05	V
Dropout voltage 2	$V_{DROP}4'$	I_O4 = 100mA		0.35	0.53	V
Ripple rejection (*2)	$R_{REJ}4$	f = 120Hz, I_O4 = 200mA	40	50		dB
CD (6V output) ; CTRL2 = "M1 or M2 or H"						
Output voltage	V_O5	I_O5 = 1000mA	5.7	6.0	6.3	V
Output current	I_O5	$V_O5 \geq 5.6V$	1500			mA
Limit current(*4)	Ilim5	$V_O5 \geq 5.5V$	1700			mV
Line regulation	$\Delta V_{OLN}5$	10.5V < $V_{CC}2$ < 16V, I_O5 = 1000mA		50	100	mV
Load regulation	$\Delta V_{OLD}5$	10mA < I_O5 < 1000mA		100	200	mV
Dropout voltage 1	$V_{DROP}5$	I_O5 = 1000mA		1.0	1.5	V
Dropout voltage 2	$V_{DROP}5'$	I_O5 = 500mA		0.5	0.75	V
Ripple rejection (*2)	$R_{REJ}5$	f = 120Hz, I_O5 = 1000mA	40	50		dB
EXT_HS-SW ; CTRL1 = "M1 or M2 or H"						
Output voltage	V_O6	I_O6 = 500mA	$V_{CC}2$-2.5	$V_{CC}2$-0.75		V
Output current	I_O6	$V_O6 \geq V_{CC}2$-2.5	500			mA
ANT_HS-SW ; CTRL1 = "H"						
Output voltage	V_O7	I_O7 = 300mA	$V_{CC}2$-1.0	$V_{CC}2$-0.5		V
Output current	I_O7	$V_O7 \geq V_{CC}2$-1.0	300			mA

*1 : All the specification is defined based on the tests performed under the conditions where Tj and Ta (= 25°C) are almost equal. These tests were performed with pulse load to minimize the increase of junction temperature (Tj).

*2 : guaranteed by design

*3 : Using resistors of tolerance within 1%.

*4 : When the output current is over "Ilim5", the over-current protector circuit operates. The over-current protector circuit is "fold-back" type, and it limits the output current and voltage when it's operating. The output current should be usually limited below Iomax that is "min of Io5" .

Product parametric performance is indicated in the Electrical Characteristics for the listed test conditions, unless otherwise noted. Product performance may not be indicated by the Electrical Characteristics if operated under different conditions.

CTRL logic truth table

CTRL1	ANT	ILM	EXT
H	ON	ON	ON
M2	ON	OFF	ON
M1	OFF	ON	ON
L	OFF	OFF	OFF

CTRL2	AUDIO	SW33V	CD
H	ON	ON	ON
M2	OFF	ON	ON
M1	OFF	OFF	ON
L	OFF	OFF	OFF

(Warning) Usage of CTRL pin

When CTRL pin transits between L and M2, since it passes M1, ILM is turned on for a moment. Likewise, when CTRL pin transits between H and M1, since it passes M2, ILM is turned off for a moment.

To avoid operation failure by the above factors, please refer (1) and (2) as shown below for precaution.dd

- Do not connect parasitic capacitor to CTRL as much as possible.
- If use of capacitor for CTRL is required, keep the resistance value as low as possible.
- Make sure that the output load capacitor has enough margin against the voltage fluctuation due to instantaneous ON/OFF.

(1) The time until a reaction occurs in output after from CTLR ON to OFF (typ)

OFF→ON time	27°C
CTRL1→ILM	6.0μsec

Due to quality fluctuation of ICs in manufacturing process, the above-mentioned time can be shorted by 10 to 20%.

(2)The time until output starts to react shifting from CTRL ON→OFF control :

ON→OFF time	27°C
CTRL1→ILM	2.3μsec

CTRL1/2 voltage range and threshold

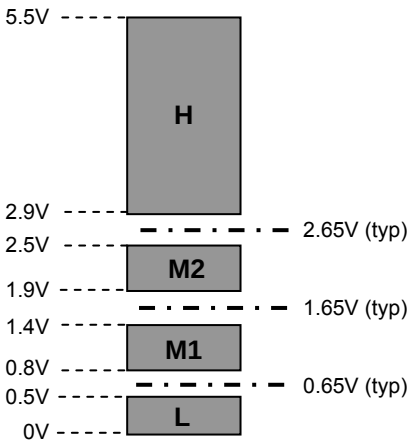

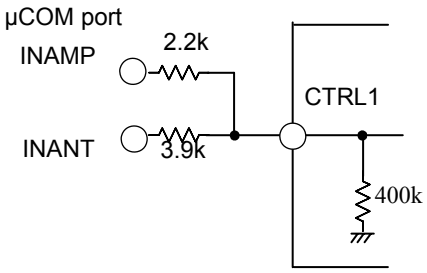

Package Dimensions

unit : mm (typ)

HZIP15
CASE 945AB
ISSUE A

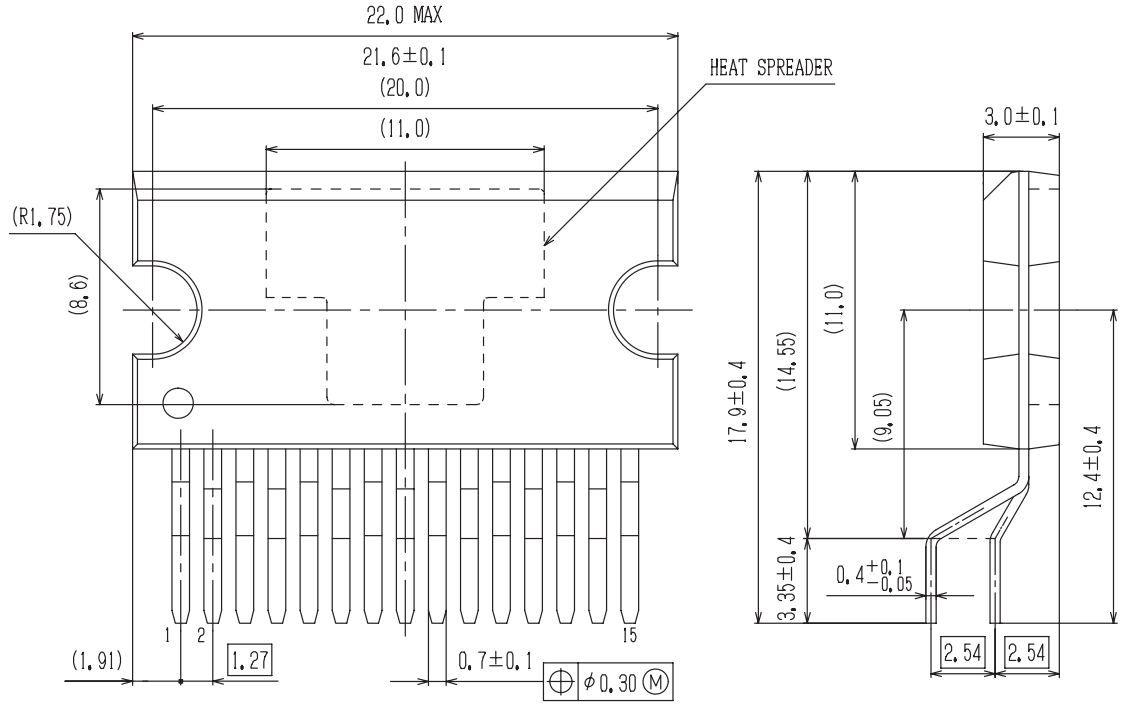

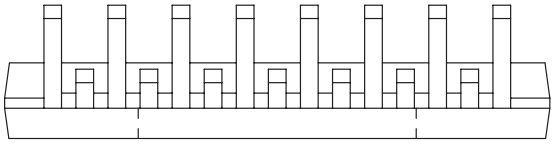

GENERIC MARKING DIAGRAM*

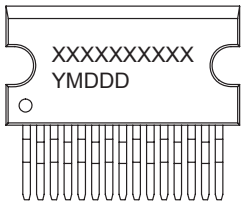

XXXXX = Specific Device Code
Y = Year
M = Month
DDD = Additional Traceability Data

*This information is generic. Please refer to device data sheet for actual part marking. Pb−Free indicator, “G” or microdot “ ▪”, may or may not be present.

SOLDERING FOOTPRINT*

(Unit: mm) ◯ Through Hole Area

Package name
HZIP15

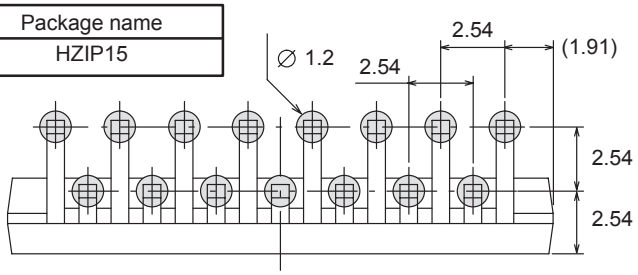

NOTE: The measurements are not to guarantee but for reference only.

*For additional information on our Pb−Free strategy and soldering details, please download the ON Semiconductor Soldering and Mounting Techniques Reference Manual, SOLDERRM/D.

• Allowable power dissipation derating curve

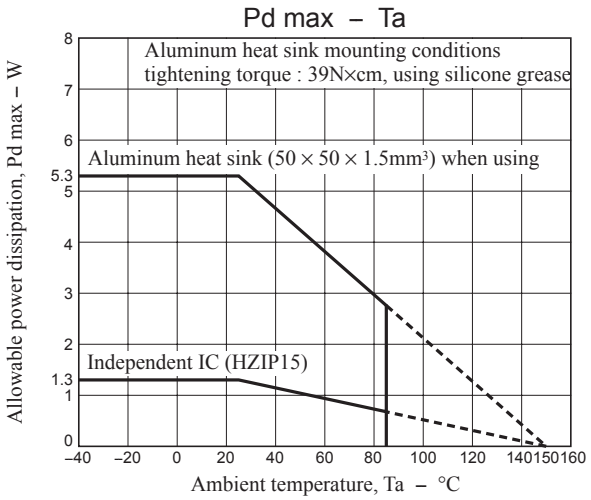

Application Circuit Example

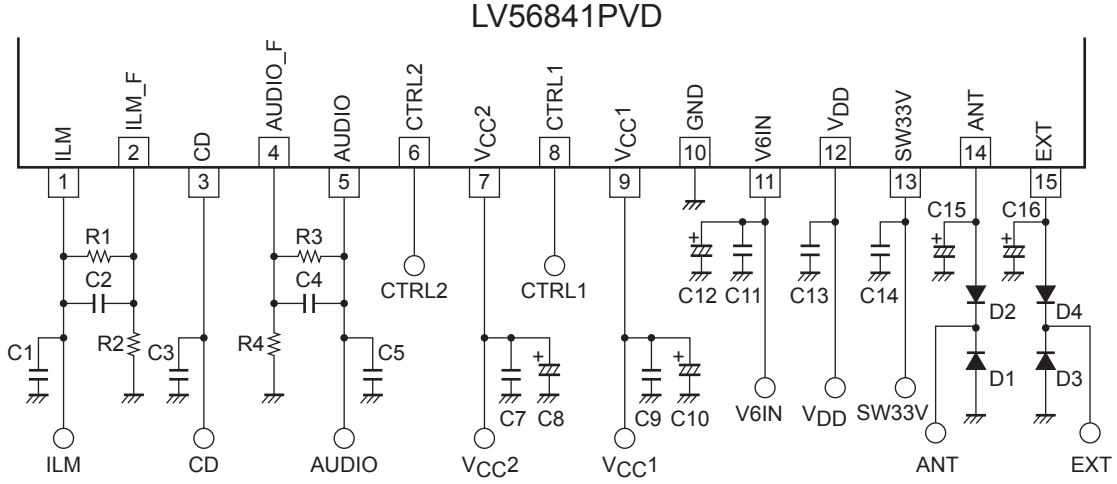

Peripheral parts

Part name	Description	Recommended value	Note
C1, C3, C5, C13, C14	output stabilization capacitor	greater than10μF (*1)	
C2, C4	output stabilization capacitor	0pF	Ceramic capacitor
C8, C10, C12	Capacitor for bypass power supply	C8: greater than 100μF C10,C12: greater than 47μF	Make sure to implement close to V_{CC} and GND.
C7, C9, C11	Capacitor for oscillation protector	greater than 0.22μF	
C15, C16	Capacitor for EXT/ANT output stabilization	greater than 2.2μF	
R1, R2	ILM voltage setting	R1/R2 43kΩ/5.1kΩ : V_O = 12V 56kΩ/7.5kΩ : V_O = 10.5V 30kΩ/5.6kΩ : V_O = 8V 30kΩ/10kΩ : V_O = 5V	Use resistors of tolerance within 1%
R3, R4	AUDIO voltage setting	R3/R4 30kΩ/10kΩ : V_O = 5V 30kΩ/5.6kΩ : V_O = 8.0V 27kΩ/4.7kΩ : V_O = 8.5V 24kΩ/3.9kΩ : V_O = 9V	Use resistors of tolerance within 1%
D1, D2, D3, D4	Internal device protector diode	ON Semiconductor SB1003M3	

(*1) Make sure that output capacitors are greater than 10uF and meets the condition of ESR = 0.001 to 10Ω , in which voltage/ temperature dependence and unit differences are taken into consideration. Moreover, in case of electrolytic capacitor, high-frequency characteristics should be sufficiently good.

Block Diagram

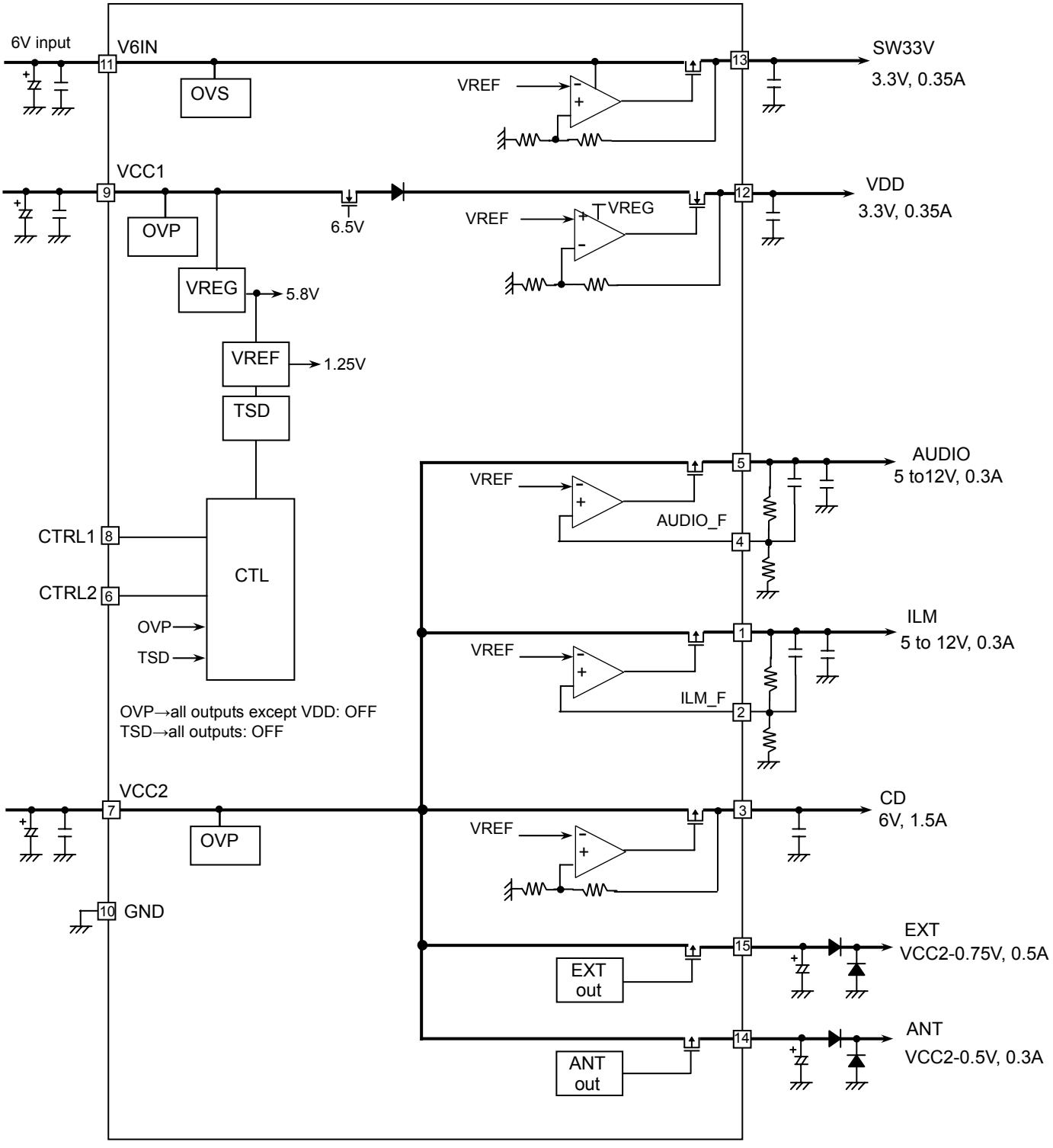

Pin Function

Pin No.	Pin name	Description	Equivalent Circuit
1	ILM	ILM output When CTRL1 = M1, H, ILM is ON	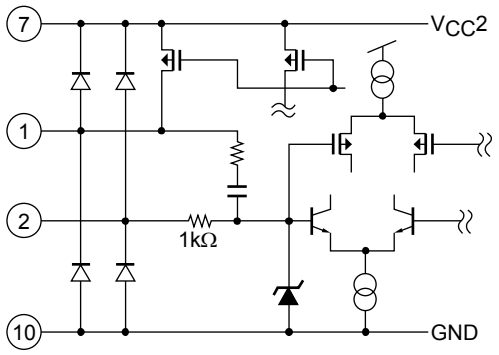
2	ILM_F	ILM voltage adjust	
3	CD	CD output When CTRL2 = M1, M2, H, CD is ON 6V/1.5A	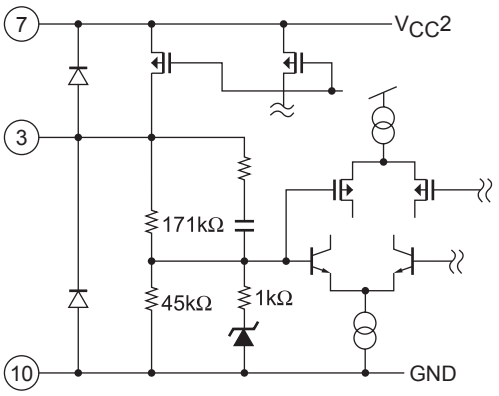
4	AUDIO_F	AUDIO voltage adjust	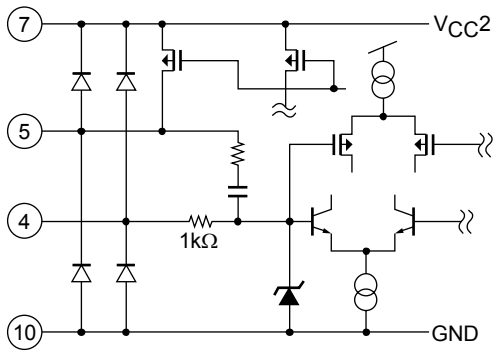
5	AUDIO	AUDIO output When CTRL2 = H AUDIO is ON	
6	CTRL2	CTRL2 input 4-value input	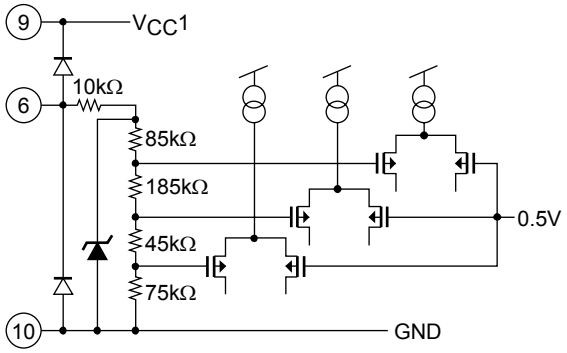
7	$V_{CC}2$	Power supply	

Continued on next page.

Continued from preceding page.

Pin No.	Pin name	Description	Equivalent Circuit
8	CTRL1	CTRL1 input 4-value input	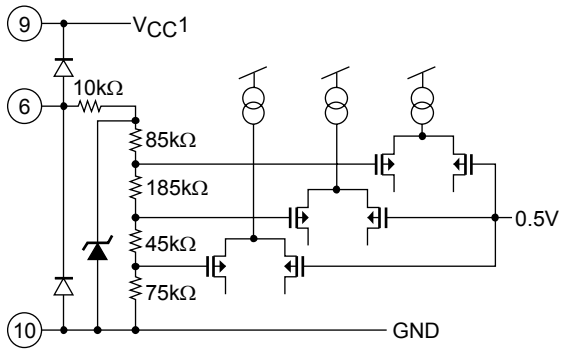
9	$V_{CC}1$	Power supply	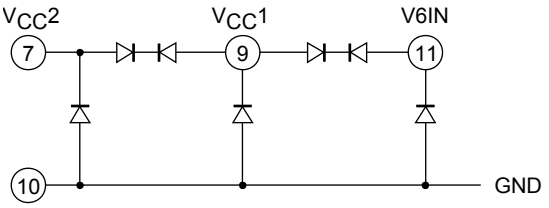
10	GND	GND	
11	V6IN	Power supply	
12	V_{DD}	V_{DD} output 3.3V/0.35A	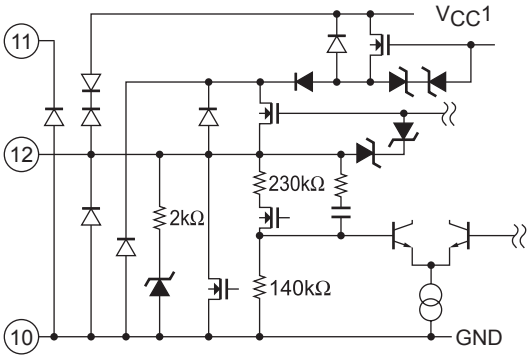
13	SW33V	SW33V output When CTRL2 = M2, H SW33V is ON 3.3V/0.35A	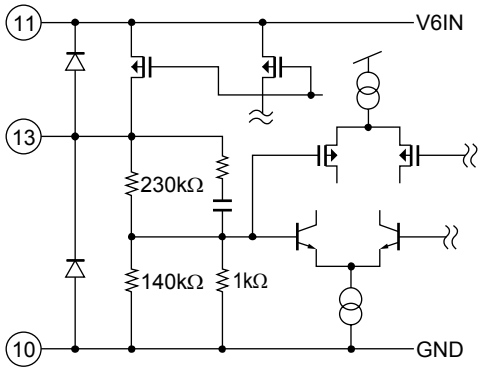
14	ANT	ANT output When CTRL1 = M2, H ANT is ON V_{CC}-0.5V/300mA	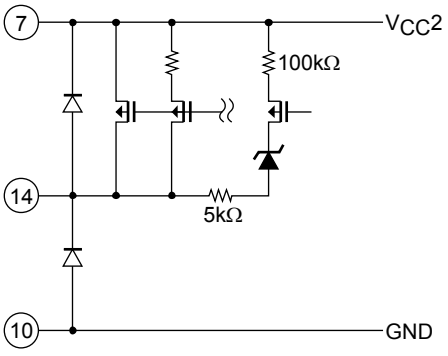

Continued on next page.

Continued from preceding page.

Pin No.	Pin name	Description	Equivalent Circuit
15	EXT	EXT output When CTRL1 = M1, M2, H, EXT is ON V_{CC}-0.5V/500mA	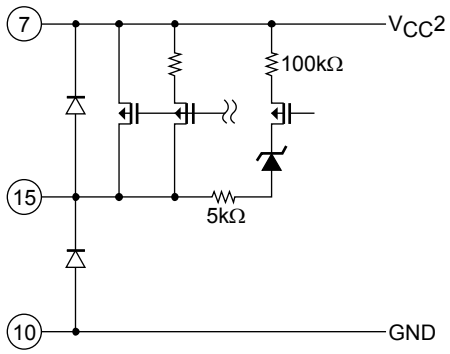

Timing Chart

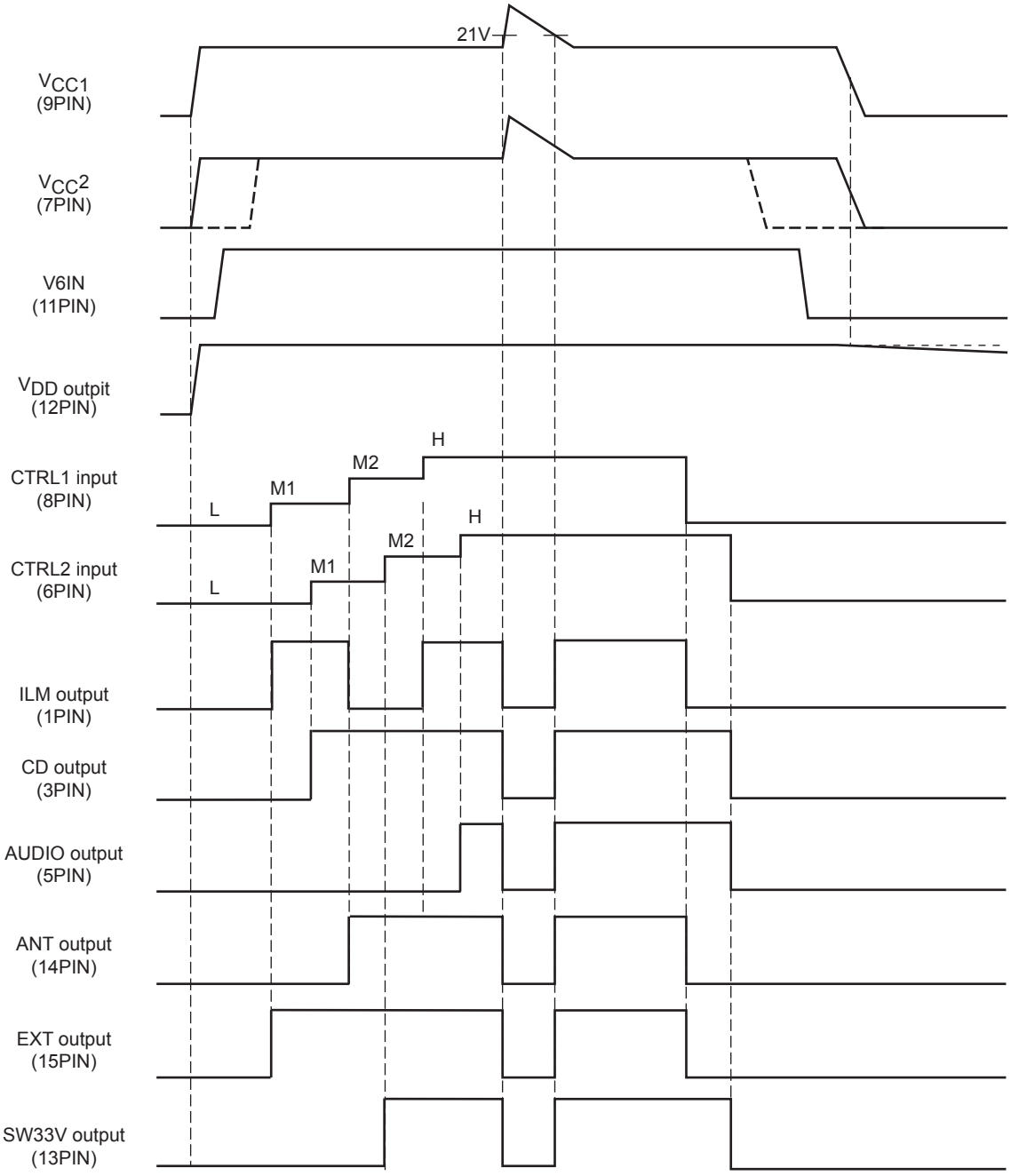

Caution: The above values are obtained when typ.

• How to set AUDIO output voltage

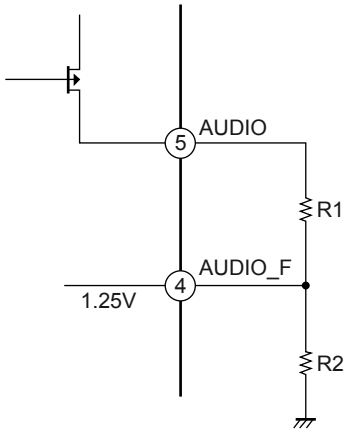

AUDIO_F is determined by internal band-gap reference voltage (typ = 1.25V).

AUDIO output voltage expression

$$AUDIO = (\frac{R_1}{R_2} + 1) \times 1.25[V]$$

$$\frac{R_1}{R_2} = \frac{AUDIO}{1.25} - 1$$

Set the ratio of R1 and R2 to satisfy above expression.

(ex) AUDIO = 9V setting

$$\frac{R_1}{R_2} = \frac{9}{1.25} - 1 = 6.2$$

$$\frac{R_1}{R_2} = \frac{24k\Omega}{3.9k\Omega} \cong 6.15$$

$$AUDIO = (6.15 + 1) \times 1.25V \cong \boxed{8.94V}$$

• ILM output voltage is similarly calculated as AUDIO output.

(ex) ILM = 10.5V setting

$$\frac{R_1}{R_2} = \frac{10.5}{1.25} - 1 = 7.4$$

$$\frac{R_1}{R_2} = \frac{56k\Omega}{7.5k\Omega} \cong 7.46$$

$$ILM = (7.46 + 1) \times 1.25V \cong \boxed{10.575V}$$

Note : The above values are typical values. These values have variation among the range of their tolerances.

HZIP15 Heat sink attachment

Heat sinks are used to lower the semiconductor device junction temperature by leading the head generated by the device to the outer environment and dissipating that heat.

a. Unless otherwise specified, for power ICs with tabs and power ICs with attached heat sinks, solder must not be applied to the heat sink or tabs.

b. Heat sink attachment
- Use flat-head screws to attach heat sinks.
- Use also washer to protect the package.
- Use tightening torques in the ranges 39-59Ncm (4-6kgcm) .
- If tapping screws are used, do not use screws with a diameter larger than the holes in the semiconductor device itself.
- Do not make gap, dust, or other contaminants to get between the semiconductor device and the tab or heat sink.
- Take care a position of via hole .
- Do not allow dirt, dust, or other contaminants to get between the semiconductor device and the tab or heat sink.
- Verify that there are no press burrs or screw-hole burrs on the heat sink.
- Warping in heat sinks and printed circuit boards must be no more than 0.05 mm between screw holes, for either concave or convex warping.
- Twisting must be limited to under 0.05 mm.
- Heat sink and semiconductor device are mounted in parallel. Take care of electric or compressed air drivers
- The speed of these torque wrenches should never exceed 700 rpm, and should typically be about 400 rpm.

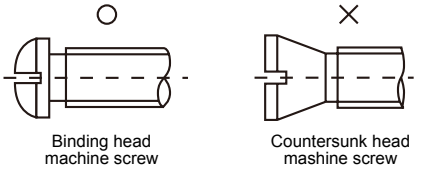

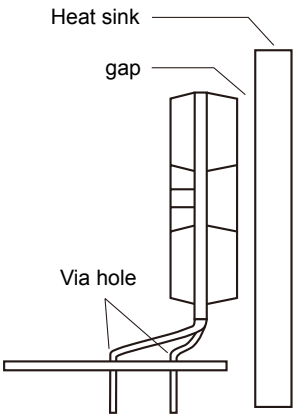

c. Silicone grease
- Spread the silicone grease evenly when mounting heat sinks.
- Recommends YG-6260 (Momentive Performance Materials Japan LLC)

d. Mount
- First mount the heat sink on the semiconductor device, and then mount that assembly on the printed circuit board.
- When attaching a heat sink after mounting a semiconductor device into the printed circuit board, when tightening up a heat sink with the screw, the mechanical stress which is impossible to the semiconductor device and the pin doesn't hang.

e. When mounting the semiconductor device to the heat sink using jigs, etc.,
- Take care not to allow the device to ride onto the jig or positioning dowel.
- Design the jig so that no unreasonable mechanical stress is applied to the semiconductor device.

f. Heat sink screw holes
- Be sure that chamfering and shear drop of heat sinks must not be larger than the diameter of screw head used.
- When using nuts, do not make the heat sink hole diameters larger than the diameter of the head of the screws used. A hole diameter about 15% larger than the diameter of the screw is desirable.
- When tap screws are used, be sure that the diameter of the holes in the heat sink are not too small. A diameter about 15% smaller than the diameter of the screw is desirable.

g. There is a method to mount the semiconductor device to the heat sink by using a spring band. But this method is not recommended because of possible displacement due to fluctuation of the spring force with time or vibration.

ORDERING INFORMATION

Device	Package	Shipping (Qty / Packing)
LV56841PVD-XH	HZIP15 (Pb-Free / Halogen Free)	20 / Fan-Fold

ON Semiconductor and the ON logo are registered trademarks of Semiconductor Components Industries, LLC (SCILLC) or its subsidiaries in the United States and/or other countries. SCILLC owns the rights to a number of patents, trademarks, copyrights, trade secrets, and other intellectual property. A listing of SCILLC's product/patent coverage may be accessed at www.onsemi.com/site/pdf/Patent-Marking.pdf. SCILLC reserves the right to make changes without further notice to any products herein. SCILLC makes no warranty, representation or guarantee regarding the suitability of its products for any particular purpose, nor does SCILLC assume any liability arising out of the application or use of any product or circuit, and specifically disclaims any and all liability, including without limitation special, consequential or incidental damages. "Typical" parameters which may be provided in SCILLC data sheets and/or specifications can and do vary in different applications and actual performance may vary over time. All operating parameters, including "Typicals" must be validated for each customer application by customer's technical experts. SCILLC does not convey any license under its patent rights nor the rights of others. SCILLC products are not designed, intended, or authorized for use as components in systems intended for surgical implant into the body, or other applications intended to support or sustain life, or for any other application in which the failure of the SCILLC product could create a situation where personal injury or death may occur. Should Buyer purchase or use SCILLC products for any such unintended or unauthorized application, Buyer shall indemnify and hold SCILLC and its officers, employees, subsidiaries, affiliates, and distributors harmless against all claims, costs, damages, and expenses, and reasonable attorney fees arising out of, directly or indirectly, any claim of personal injury or death associated with such unintended or unauthorized use, even if such claim alleges that SCILLC was negligent regarding the design or manufacture of the part. SCILLC is an Equal Opportunity/Affirmative Action Employer. This literature is subject to all applicable copyright laws and is not for resale in any manner.